State of Alaska

Department of Transportation and Public Facilities Southeast Region

The undersigned hereby certifies that this duplicated document is an exact and true copy of the original.

Cody Sutton

CLARK BAY FERRY TERMINAL IMPROVEMENTS

HOLLIS, ALASKA

AUG 15, 2014

PROJECT No. 67449/0924019

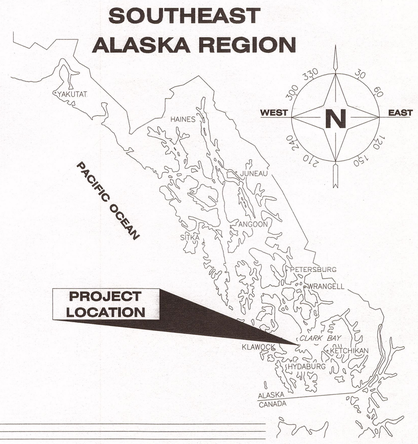

AS-BUILT PLANS

CONTRACTOR: WESTERN MARINE CONSTRUCTION
PROJECT ENGINEER: KERI WILLIAMSON
START DATE: APRIL 2, 2015
END DATE: AUGUST 5, 2015

THE FOLLOWING STANDARD DRAWINGS APPLY TO THIS PROJECT:

A-1	C-03.10	D-01.02	D-04.21	
E-13.00	L-23.01	T-22.03	F-01.01	F-03.01

TIDAL DATA	
HTL	+19.8'
MHW	+15.6'
MLLW	0.0'
ELW	-4.6'



SITE MAP

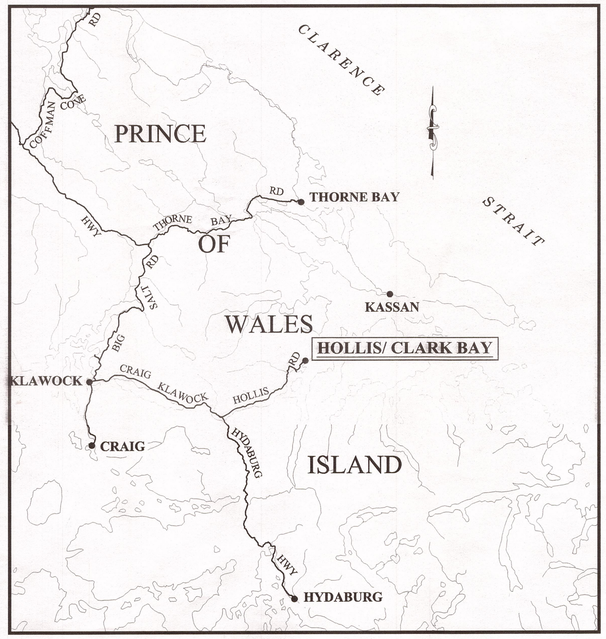

VICINITY MAP

SHEET INDEX

SHEET NO.	DESCRIPTION
01	TITLE SHEET
02	NOTES
03	SURVEY CONTROL
04	EXISTING SITE PLAN
05	NEW SITE PLAN
06-07	UPLANDS
08	MARINE SITE PLAN
09-10	130' TRANSFER BRIDGE
11-15	ABUTMENT & BEARINGS
16-17	GIRDERS & FRAMING
18-19	BRIDGE DECK & RAILS
20-21	RAMP MODIFICATIONS
22-23	APRON & DETAILS
24	FLOAT
25-27	FLOAT RESTRAINT DOLPHIN & COLLAR
28-29	DOLPHIN W2 & DETAILS
30-35	DOLPHINS W1 & E1-3
36-37	ANODES & RETRIEVAL MAST
38	TENSION PILE ANCHOR
39	STEEL CATWALK
40-41	GANGWAY
42-44	PLATFORMS
45	CATWALK
46-48	ELECTRICAL LAYOUTS & LIGHTS
49-51	HYDRAULICS
52-57	130' PEDESTRIAN BRIDGE
58-61	INTERMEDIATE RAMP

PATH: Q:\POW\67449\PLANSET\MP\01 - TITLE SHEET.DWG TAB:1
Tuesday, April 15, 2014 10:47:05 AM
PLOT: PSPACE OR MSPACE: 1=1(F)

STATE OF ALASKA
DEPARTMENT OF TRANSPORTATION & PUBLIC FACILITIES
SOUTHEAST REGION

STATE OF ALASKA 49th DAVID H. LOWELL CE-12614 REGISTERED PROFESSIONAL ENGINEER

APPROVED: _____ 6/5/14
for REGIONAL PRE-CONSTRUCTION ENGINEER DATE
L. PAT CARROLL, P.E.

APPROVED: _____ 6/5/14
DIRECTOR OF DESIGN & CONSTRUCTION, SE REGION DATE
CHUCK CORREA, P.E.

CERTIFIED TRUE & CORRECT AS-BUILT OF ACTUAL FIELD CONDITION:

CONSTRUCTION PROJECT MANAGER DATE

STATE	PROJECT DESIGNATION	YEAR	SHEET NO.	TOTAL SHEETS
ALASKA	67449/0924019	2014	1	~~57~~ 61

ESTIMATE OF QUANTITIES

ITEM #	ITEM DESCRIPTION	PAY UNIT	QTY.
	BASIC BID		
202 (1)	REMOVAL OF STRUCTURES AND OBSTRUCTIONS	LUMP SUM	ALL REQUIRED
202 (13)	TERMINAL CLOSURE PRICE WITHHOLDING	CONTINGENT SUM	ALL REQUIRED
203 (3)	UNCLASSIFIED EXCAVATION	CUBIC YARD	300
203 (6)	BORROW, TYPE B	TON	900
203 (7)	BORROW, TYPE C	TON	2,300
301 (1)	AGGREGATE BASE COURSE, GRADING D-1	TON	400
401 (1)	ASPHALT CONCRETE, TYPE II; CLASS B	TON	750
401 (2)	ASPHALT CEMENT, GRADE PG 58-28	TON	50
402 (1)	STE-1 ASPHALT FOR TACK COAT	TON	2
501 (1)	CONCRETE BRIDGE ABUTMENT	LUMP SUM	ALL REQUIRED
504 (1)	4-PILE MOORING DOLPHIN CAP (W1 & E1-3)	EACH	4
504 (2)	4-PILE MOORING DOLPHIN FENDER SYSTEM (W1 & E1-3)	EACH	4
504 (3)	3-PILE MOORING DOLPHIN CAP (W2)	EACH	1
504 (4)	3-PILE RESTRAINT DOLPHIN CAP (RW & RE)	EACH	2
504 (5)	RELOCATE EXISTING 37' ACCESS GANGWAY	EACH	1
504 (6)	37' STEEL ACCESS GANGWAY	EACH	1
504 (7A)	51' STEEL CATWALK	EACH	1
504 (7B)	53' STEEL CATWALK	EACH	3
504 (7C)	66' STEEL CATWALK	EACH	1
504 (8)	130' STEEL TRANSFER BRIDGE	LUMP SUM	ALL REQUIRED
504 (9)	STEEL BRIDGE FLOAT SYSTEM	LUMP SUM	ALL REQUIRED
504 (10)	INTERMEDIATE RAMP MODIFICATIONS	LUMP SUM	ALL REQUIRED
504 (11)	VEHICLE APRON	LUMP SUM	ALL REQUIRED
504 (12)	GANGWAY AND PLATFORMS	LUMP SUM	ALL REQUIRED
504 (13)	HYDRAULIC SYSTEM DESIGN	LUMP SUM	ALL REQUIRED
504 (14)	NEW HYDRAULIC LIFT SYSTEM	LUMP SUM	ALL REQUIRED
504 (15)	130' STEEL PEDESTRIAN BRIDGE	LUMP SUM	ALL REQUIRED
505 (1)	30" x 1/2" WALL PIPE PILE, FURNISHED	LINEAR FOOT	1,910
505 (2)	30" x 1/2" WALL PIPE PILE, DRIVEN	EACH	18
505 (3)	24" x 1/2" WALL PIPE PILE, FURNISHED	LINEAR FOOT	274
505 (4)	24" x 1/2" WALL PIPE PILE, DRIVEN	EACH	3
505 (5)	18" x 1/2" WALL PIPE PILE, FURNISHED	LINEAR FOOT	442
505 (6)	18" x 1/2" WALL PIPE PILE, DRIVEN	EACH	4
505 (7)	150 LB PILE ANODE	EACH	31
518 (1)	TENSION PILE ANCHORS	EACH	24
603 (9)	18 INCH CORRUGATED ALUMINUM PIPE	LINEAR FOOT	45
603 (22)	6 INCH PVC SANITARY SEWER PIPE	LINEAR FOOT	65
607 (3)	8' CHAIN LINK FENCE	LINEAR FOOT	150
607 (6)	WALK GATE	EACH	1
607 (8)	16' WIDE DOUBLE SWING GATE	EACH	1
611 (1)	RIPRAP, CLASS IV	CUBIC YARD	1850
~~618 (4)~~	~~SEEDING~~	~~LUMP SUM~~	~~ALL REQUIRED~~
~~620 (2)~~	~~TOPSOIL~~	~~LUMP SUM~~	~~ALL REQUIRED~~
640 (1)	MOBILIZATION & DEMOBILIZATION	LUMP SUM	ALL REQUIRED
640 (4)	WORKER MEALS AND LODGING, OR PER DIEM	LUMP SUM	ALL REQUIRED
641 (1)	EROSION AND POLLUTION CONTROL ADMINISTRATION	LUMP SUM	ALL REQUIRED
641 (3)	TEMPORARY EROSION SEDIMENT AND POLLUTION CONTROL	LUMP SUM	ALL REQUIRED
641 (4)	TEMPORARY EROSION SEDIMENT AND POLLUTION CONTROL ADDITIVES	CONTINGENT SUM	ALL REQUIRED
641 (6)	WITHHOLDING	CONTINGENT SUM	ALL REQUIRED
~~641 (7)~~	~~SILT CONTAINMENT BOOM~~	~~LUMP SUM~~	~~ALL REQUIRED~~
642 (1)	CONSTRUCTION SURVEYING	LUMP SUM	ALL REQUIRED
643 (2)	TRAFFIC MAINTENANCE	LUMP SUM	ALL REQUIRED
644 (1)	FIELD OFFICE	LUMP SUM	ALL REQUIRED
644 (6)	VEHICLES	LUMP SUM	ALL REQUIRED
645 (1)	TRAINING PROGRAM	LABOR HOUR	500
646 (1)	CPM SCHEDULING	LUMP SUM	ALL REQUIRED
662 (1)	ELECTRICAL SYSTEM DESIGN (UPLANDS & MARINE)	LUMP SUM	ALL REQUIRED
662 (2)	ELECTRICAL SYSTEM (UPLANDS & MARINE)	LUMP SUM	ALL REQUIRED

ABBREVIATIONS

AASHTO	AMERICAN ASSOC OF STATE HIGHWAY & TRANSPORTATION OFFICIALS
ABUT	ABUTMENT
ACZA	AMMONIACAL COPPER ZINC ARSENATE
AISC	AMERICAN INSTITUE OF STEEL CONSTRUCTION
ALUM	ALUMINUM
ASTM	AMERICAN SOCIETY FOR TESING & MATERIALS
ASSY	ASSEMBLY
ATS	ALASKA TIDELAND SURVEY
AWS	AMERICAN WELDING SOCIETY
BOP	BEGINNING OF PROJECT
BRG	BEARING
BTM	BOTTOM
BTWN	BETWEEN
C/C	CENTER TO CENTER
CJP	COMPLETE JOINT PENETRATION
CL	CENTERLINE
CLR	CLEAR
CNTR	CENTER
CONC	CONCRETE
CS	CONTINGENT SUM
CTSK	COUNTERSINK
CU	CUBIC
CVN	CHARPY V-NOTCH
DBL	DOUBLE
DL	DEAD LOAD
EA	EACH
ECON HD	ECONOMY HEAD
ELEV	ELEVATION
EQ	EQUAL
FB	FLAT BAR
FS	FAR SIDE
GALV	GALVANIZED
GR	GRADE
HDG	HOT DIP GALVANIZE
HDPE	HIGH DENSITY POLYETHYLENE PLASTIC
HRZ	HORIZONTAL
HSS	HOLLOW STRUCTURAL SECTION
LF	LINEAR FEET
LS	LUMP SUM
MI	MALLEABLE IRON
NS	NON-SHRINKING, OR NEAR SIDE
OC	ON CENTER
OPP	OPPOSITE
PL	PLATE
PP	PIPE PILE
QTY	QUANTITY
R	RADIUS
REQ'D	REQUIRED
SS	STAINLESS STEEL
STD	STANDARD
SYMM	SYMMETRIC
T&B	TOP AND BOTTOM
TYP	TYPICAL
UHMW	ULTRA HIGH MOLECULAR WEIGHT POLYETHYLENE PLASTIC
UON	UNLESS OTHERWISE NOTED
WP	WORK POINT
XS	EXTRA STRONG (PIPE)
XXS	DOUBLE EXTRA STRONG (PIPE)

GENERAL NOTES

DESIGN SPECIFICATIONS
PER CONTRACT DOCUMENTS FOR PROJECT NO. 67449

DESIGN STANDARDS: AISC STEEL CONSTRUCTION MANUAL 14TH ED. LRFD
AASHTO LRFD BRIDGE DESIGN SPECIFICATIONS 5TH ED. W/ 2010 INTERIM REVISIONS
AASHTO LRFD GUIDE SPECIFCATIONS, PEDESTRIAN BRIDGES, 2009

DESIGN LOADS: LIVE LOAD: BRIDGE – HL93 VEHICLE LOAD+IM
CATWALK – 90 PSF
BERTHING: 100 FT-KIPS (PERPENDICULAR)
MOORING: 80 KIPS (ANY DIRECTION)

DESIGN VESSELS: IFA M/V STIKINE/PRINCE OF WALES
AMHS M/V AURORA/LECONTE

MATERIALS "BUY AMERICA" PROVISIONS APPLY
STEEL SHAPE & PLATES:

PLATES FOR BRIDGE MODS –	ASTN A709 GR 50
PLATES & SHAPES –	ASTM A36, UNLESS OTHERWISE NOTED
HOLLOW STRUCTURAL SECTIONS –	ASTM A500 GR B
HP –	ASTM A572 GR 50
PIPE –	ASTM A53 GR B
STAINLESS STEEL –	ASTM A276 TYPE 316
W –	ASTM A992, ASTM A709

PILING: STEEL – API 5L X52, OR ASTM A252 GR 3, OR ASTM A709 GR 50
FABRICATED TO API 2B

GRATING: STEEL WELDED-BAR TYPE, SERRATED TOP, THICKNESS & BAR SPACINGS AS NOTED ON PLANS.

STEEL 10-DIAMOND GRIP STRUT PLANK, OR APPROVED EQUAL.

PLASTIC: ULTRA HIGH MOLECULAR WEIGHT POLYETHYLENE PLASTIC ASTM D4020

FASTENERS: PER SPECS

CONCRETE: CLASS A

REBAR: LADDER RUNGS – ASTM A706 GR 60
REINFORCEMENT – ASTM A615 GR 60

PROTECTIVE COATINGS
ALL STEEL, PILING, & WELDMENTS: GALVANIZED AFTER FABRICATION PER SPECS, UNLESS OTHERWISE NOTED

FIELD REPAIR OF EXISTING COATINGS: DAMAGED GALVANIZED AND PAINT COATINGS SHALL BE REPAIRED PER SPEC 504-3.03.

PILING

DIAMETER & WALL THICKNESS AS PER PILING TABLE & PLANS
DRIVING SHOES REQUIRED ON ALL PILES, APF 14001 OR EQUAL

WELDS

ALL WELDING SHALL BE PERFORMED BY CERTIFIED PERSONS IN ACCORDANCE WITH AWS D1.1 AND D1.5 AS APPLICABLE.

DESIGN DRAWINGS IDENTIFY THE MAIN LOAD CARRYING MEMBERS. ALL STRUCTURAL STEEL SO DESIGNATED ON THE PLANS SHALL RECEIVE CHARPY V-NOTCH TESTING FOR TEMPERATURE ZONE 2 IN ACCORDANCE WITH ASTM A709 AS NOTED BELOW:

1. TENSION COMPONENTS OF REDUNDANT MEMBERS, DESIGNATED "T" ON THE PLANS, SHALL BE TESTED IN ACCORDANCE WITH TABLE 8.

2. TENSION COMPONENTS OF FRACTURE CRITICAL MEMBERS, DESIGNATED "F" ON THE PLANS, SHALL BE TESTED IN ACCORDANCE WITH TABLE 9.

Record Drawings have been reviewed by the Project Engineer, and represent to the best of my knowledge, the project as constructed.
PE _____ Date 12/10/15

REFERENCE LEGEND



NOTES:
* SHEET NUMBER WHERE REFERENCE IS LOCATED WHEN ON A DIFFERENT SHEET OR DASH MARK WHEN REFERENCE IS ON THE SAME SHEET

DRAWING SCALES ARE FOR FULL-SIZE SHEETS. IF NO SCALE SHOWN, USE DIMENSIONS.

DESIGNED BY: D. LOWELL
STATE OF ALASKA – DAVID H. LOWELL – CE-12614 – REGISTERED PROFESSIONAL ENGINEER
6/9/14
CHECKED BY: STAFF
DRAWN BY: STAFF

STATE OF ALASKA
DEPARTMENT OF TRANSPORTATION & PUBLIC FACILITIES
SOUTHEAST REGION

CLARK BAY FERRY TERMINAL IMPROVEMENTS

ESTIMATE OF QUANTITIES & GENERAL NOTES

PATH: Q:\POW\67449\PLANSET\MF\02 – GENERAL NOTES & QUANTITIES.DWG
TAB: 2 Monday, June 09, 2014 12:49:50 PM LOWELL, DAVID H (DOT)

REVISIONS NO.	DATE	DESCRIPTION	PROJECT DESIGNATION	YEAR	SHEET NO.	TOTAL SHEETS
			67449/0924019	2014	2	~~57~~

EXISTING PROPERTY				
Point #	Northing	Easting	Elevation	Description
9	200020.88	599765.58	8.37	REBAR_FND
500	200228.04	599820.44	22.61	ALPRIM3.25"_DNR_ASLS_79-181_PT
501	200229.07	599818.57	22.62	ROW_POST_CONC
502	200289.39	599708.78	23.59	ALPRIM3.25"_DNR_ASLS79-181_PC
503	200167.66	599773.96	20.49	ALPRIM_3.25"_WC_C4_ASLS83-43
504	200362.93	599229.95	17.18	ALPRIM3.25"_DNR_ASLS79-181_PT
506	200235.53	599586.44	16.25	ALPRIM3.25"_ASLS_2007-55_MC5/SEC34_SET
507	200089.65	599773.20	24.01	ALSEC2"_ASLS2007-55_MC3_SET
508	200009.66	599772.50	23.79	ALSEC2"_WCC2_TR-B_ATS1675/WCC3_ATS1041_SET
509	200128.82	599705.80	15.78	OPUS_ALPRIM3.25"_ASLS2007-55/MC5_ATS1675_SET
510	200164.79	599740.55	18.46	ALPRIM3.25"_WCMC5_ATS1675_SET
512	200302.01	599626.70	22.64	ALPRIM3.25"_C6_ASLS2007-55/SEC34/ROW_SET
513	200003.76	600274.17	7.23	ALPRIM3.25"_WCC2_ATS1041
514	200088.91	600275.15	13.00	ALPRIM3.25"_MC1_ASLS83-43/MC1_ATS1041/ASLS79-181
515	200213.15	599724.44	26.66	BT_16"SPRUCE
517	200164.62	599761.00	24.33	BT_10"SPRUCE
518	200185.39	599742.72	26.45	BT_14"HEMLOCK
519	200291.92	599597.36	23.26	BT_10"HEMLOCK
520	200254.11	599660.01	27.31	BT_18"HEMLOCK
521	200311.53	599630.72	25.34	BT_11"SPRUCE
522	200298.54	599641.18	25.41	BT_10"SPRUCE

ALL MONUMENTS IN THE PROPERTY TABLE SHALL BE PRESERVED OR REFERENCED PRIOR TO DISTURBANCE AND REPLACED AT THEIR ORIGINAL HORIZONTAL POSITION.

SURVEY CONTROL				
Point #	Northing	Easting	Elevation	Description
1	200000.00	600000.00	24.68	GPS_ALCAP2.5"_CLB-1
2	200347.82	599942.86	28.84	GPS_PK/WASH_CLB-2
3	200530.64	598779.98	73.67	GPS_PK_WASH

ALL MONUMENTS IN THE SURVEY CONTROL TABLE ARE PROVIDED STRICTLY FOR SURVEY CONTROL. SHOULD ANY OF THEM BE DESTROYED DURING CONSTRUCTION THEY SHALL NOT BE REPLACED. HOWEVER, THE CONTRACTOR IS RESPONSIBLE FOR ESTABLISHING ADDITIONAL CONTROL AS NEEDED.

DO NOT SCALE FROM THESE DRAWINGS USE DIMENSIONS

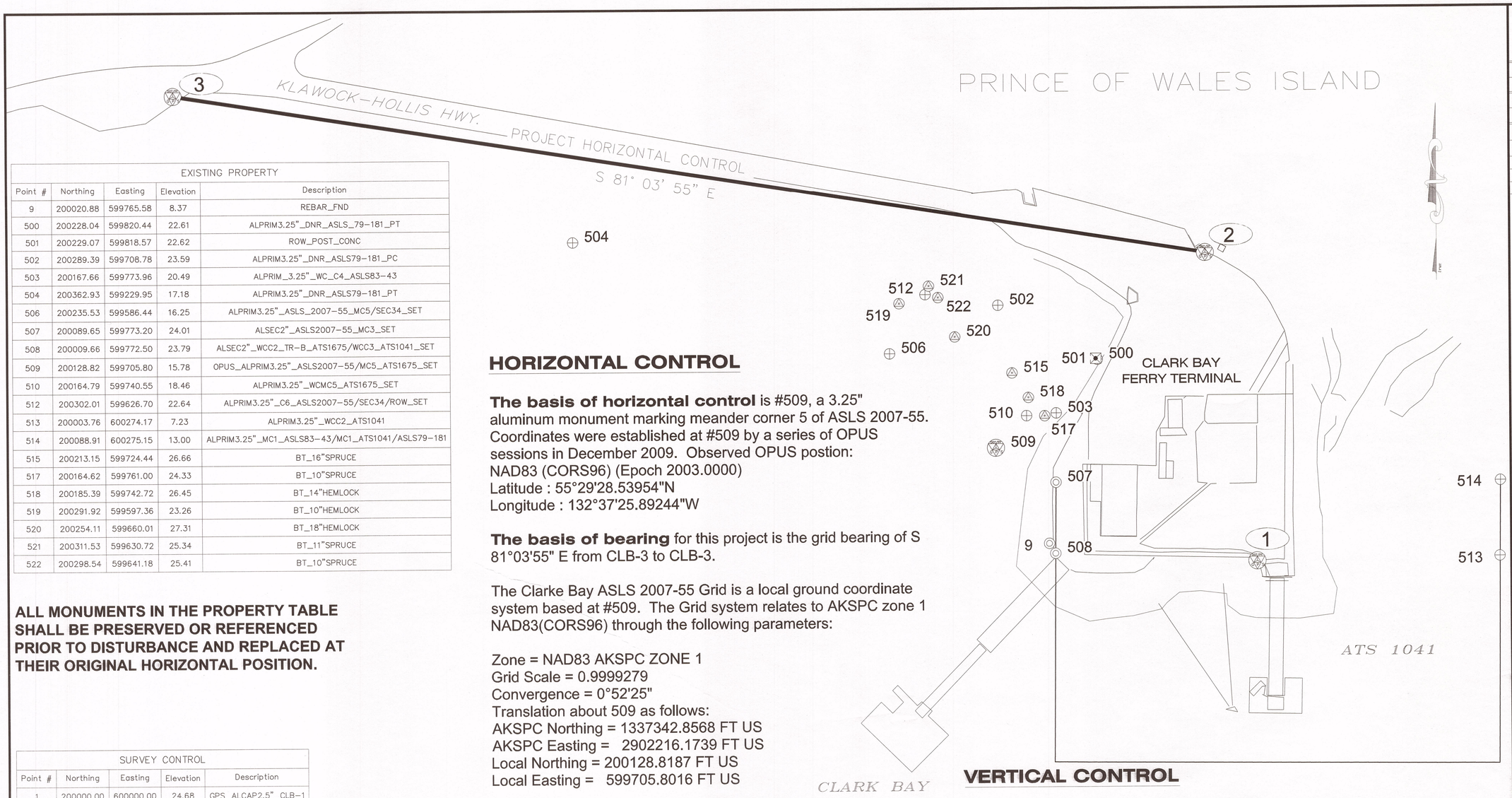

HORIZONTAL CONTROL

The basis of horizontal control is #509, a 3.25" aluminum monument marking meander corner 5 of ASLS 2007-55. Coordinates were established at #509 by a series of OPUS sessions in December 2009. Observed OPUS postion:
NAD83 (CORS96) (Epoch 2003.0000)
Latitude : 55°29'28.53954"N
Longitude : 132°37'25.89244"W

The basis of bearing for this project is the grid bearing of S 81°03'55" E from CLB-3 to CLB-3.

The Clarke Bay ASLS 2007-55 Grid is a local ground coordinate system based at #509. The Grid system relates to AKSPC zone 1 NAD83(CORS96) through the following parameters:

Zone = NAD83 AKSPC ZONE 1
Grid Scale = 0.9999279
Convergence = 0°52'25"
Translation about 509 as follows:
AKSPC Northing = 1337342.8568 FT US
AKSPC Easting = 2902216.1739 FT US
Local Northing = 200128.8187 FT US
Local Easting = 599705.8016 FT US

Project Specific Horizontal Control

CLB-2 : PK\Washer located approximatley 16' west of a concrete utility vault at the northern end of the parking area .
Clarke ASLS-Grid N 200347.82 FT US, E 599942.86 FT US
AKSPC N 1337565.43 FT US , E 2902449.85 FT US

CLB-3 : A PK\Washer
Clarke ASLS-Grid N 200530.64 FT US, E 598779.98 FT US
AKSPC N 1337730.49FT US, E 2901284.40 FT US

VERTICAL CONTROL

The basis of vertical control is the USC&GS benchmark # 1X with a 2003 published elevation of 17.41' above MLLW (Tidal Epoch 1983-2001). This is NOS Tidal Series 9450544.
<http://tidesandcurrents.noaa.gov/benchmarks/9450544.html>

The project specific basis of vertical control is CLB-2 with an observed elevation of 28.84' above MLLW.

Record Drawings have been reviewed by the Project Engineer, and represent to the best of my knowledge, the project as constructed.
PE _____ Date 12/10/15

PATH: Q:\POW\67449\PLANSET\MF\03 - SURVEY CONTROL.DWG

WALTERS L. MICHAEL
TAB: 3 Tuesday, May 27, 2014 4:15:46 PM

ADDENDUM NUMBER

ATTACHMENT NUMBER

RECORD OF REVISIONS

No.	DATE	DESCRIPTION

MONUMENT NOTES:

1. If any pair of control points disagrees from published value by more than 1:10,000 horizontally or vertically then a third network point must be tied to ascertain which point is in error or has been disturbed.

2. Whether listed or not, all monuments, property markers, or accessories that will be disturbed or buried shall be referenced prior to being disturbed, and re-established in their original position and a record of monument form in accordance with A.S.34.65.040 shall be submitted to the construction engineer for review prior to recording. Coordinate values listed are for informational purposes and should be used to reset monuments only as a last resort.

CHECKED BY: D.IGNOTOV

STATE OF ALASKA
49 TH
Daniel M. Ignotov
May 27, 2014
No. 11296
REGISTERED PROFESSIONAL LAND SURVEYOR

DESIGNED BY: J.PAPOI

DRAWN BY: J.PAPOI

STATE OF ALASKA
DEPARTMENT OF TRANSPORTATION & PUBLIC FACILITIES
SOUTHEAST REGION

CLARK BAY FERRY TERMINAL IMPROVMENTS
PROJECT #67449

SURVEY CONTROL

PROJECT DESIGNATION
67449/0924019

STATE	YEAR
ALASKA	2014
SHEET NUMBER	TOTAL SHEETS
3	~~57~~

61

FRAC.
SEC. 34
T.73S., R.84E.
C.R.M.

A.S.L.S. 2007-55

A.S.L.S. 83-43
STATE OF ALASKA

A.S.L.S. 79-181
TRACT C
STATE OF ALASKA

A.T.S. 1041
STATE OF ALASKA

A.T.S. 1675
TRACT A
STATE OF ALASKA

A.T.S. 1675
TRACT B

A.T.S. 1675
TRACT C
STATE OF ALASKA

OFFICE

TERMINAL BUILDING

CONEX TRAILERS

MAINTENANCE BUILDING

EXISTING STAGING LANES

TOE OF EXISTING FILL SLOPE

EXISTING SEAPLANE FACILITY

EXISTING SANITARY SEWER OUTFALL

EXISTING CABLE TIEBACKS

EXISTING TRANSFER BRIDGE

EXISTING FLOAT SYSTEM

EXISTING CONCRETE ANCHOR & ANCHOR CHAIN (ABANDON IN-PLACE)

EXISTING CONCRETE ANCHOR & ANCHOR CHAIN (ABANDON IN-PLACE)

EXISTING MOORING STRUCTURES

EXISTING MOORING STRUCTURES

M.V. STIKINE

50' 50' 60' 60' 60' 60' 80'

W1 E1 E2 E3 E4 E5

PILES CUT AT MUDLINE (3), ALL OTHER MOORING STRUCTURES REMOVED IN THEIR ENTIRETY

CLARK BAY

EXISTING SITE PLAN

40' 0 40' 80'
GRAPHIC SCALE (FT)

LEGEND

- EXISTING PROPERTY LINE
- ROW RIGHT OF WAY LINE
- EXISTING GRAVEL SURFACE
- EXISTING ASPHALT SURFACE (TO REMOVE)

Record Drawings have been reviewed by the Project Engineer, and represent to the best of my knowledge, the project as constructed.
PE _____ Date 12/10/15

DRAWING SCALES ARE FOR FULL-SIZE SHEETS. IF NO SCALE SHOWN, USE DIMENSIONS.

DESIGNED BY: D. LOWELL
STATE OF ALASKA 49th DAVID H. LOWELL CE-12614 REGISTERED PROFESSIONAL ENGINEER
6/5/14
CHECKED BY: STAFF
DRAWN BY: STAFF
PATH: Q:\POW\67449\PLANSET\MF\04 - EXISTING SITE PLAN.DWG
TAB: 4 Thursday, June 05, 2014 4:21:33 PM LOWELL, DAVID H (DOT)

REVISIONS

NO.	DATE	DESCRIPTION

STATE OF ALASKA
DEPARTMENT OF TRANSPORTATION
& PUBLIC FACILITIES
SOUTHEAST REGION

CLARK BAY FERRY TERMINAL IMPROVEMENTS

EXISTING SITE PLAN

PROJECT DESIGNATION	YEAR	SHEET NO.	TOTAL SHEETS
67449/0924019	2014	4	~~57~~ 61

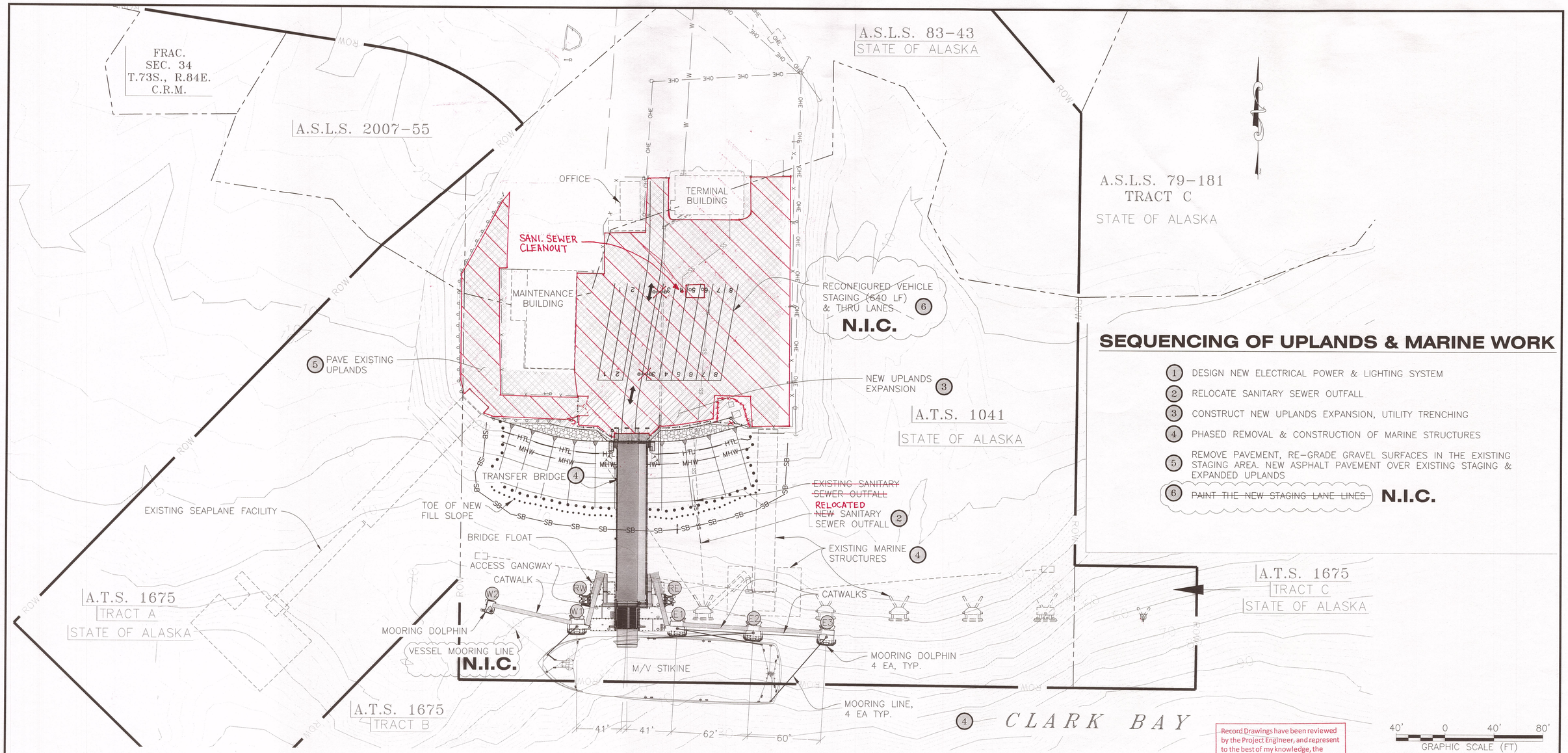

SEQUENCING OF UPLANDS & MARINE WORK

1. DESIGN NEW ELECTRICAL POWER & LIGHTING SYSTEM
2. RELOCATE SANITARY SEWER OUTFALL
3. CONSTRUCT NEW UPLANDS EXPANSION, UTILITY TRENCHING
4. PHASED REMOVAL & CONSTRUCTION OF MARINE STRUCTURES
5. REMOVE PAVEMENT, RE-GRADE GRAVEL SURFACES IN THE EXISTING STAGING AREA. NEW ASPHALT PAVEMENT OVER EXISTING STAGING & EXPANDED UPLANDS
6. ~~PAINT THE NEW STAGING LANE LINES~~ **N.I.C.**

LEGEND

- ROW — RIGHT OF WAY LINE
- EXISTING PROPERTY LINE
- ARMOR ROCK
- CHAIN-LINK FENCE
- LIMITS OF FILL
- AS-BUILT NEW ASPHALT PAVEMENT, ~~EXISTING GROUND~~
- ~~NEW ASPHALT PAVEMENT, UPLANDS EXPANSION~~
- SB — SILT BOOM

CONSTRUCTION LIMITATIONS AND SEQUENCING NOTES:

1. CPM SCHEDULING – THE CONTRACTOR SHALL DEVELOP & MAINTAIN A CPM SCHEDULE FOR ALL WORK ON THE PROJECT PER SECTION 646, INCLUDING DETAILED SEQUENCE AND METHODS FOR CONDUCTING WORK WHILE MAINTAINING SCHEDULED FERRY SERVICE & TERMINAL OPERATIONS. COORDINATE WITH IFA FOR THE LATEST FERRY SCHEDULES AND UPDATES, AND THE HOLLIS TERMINAL MANAGER WHEN SCHEDULING CONSTRUCTION ACTIVITIES. NO WORK MAY COMMENCE ON SITE UNTIL THE CPM SCHEDULE HAS BEEN APPROVED BY THE ENGINEER.
2. ENVIRONMENTAL COMMITMENTS – REFERENCE APPENDIX B AND SECTION 641 OF THE SPECIFICATIONS FOR ALL PERTINENT ENVIRONMENTAL WORK RESTRICTIONS.
3. UNAUTHORIZED TERMINAL CLOSURES – REFERENCE SECTION 202 OF THE SPECIAL PROVISIONS. A TERMINAL CLOSURE PRICE WITHHOLDING (DEDUCTION IN CONTRACT PAYMENTS) WILL BE ASSESSED UNDER BID ITEM 202(13) FOR EACH OCCURRENCE THAT A SCHEDULED IFA VESSEL IS PREVENTED FROM USING THE FACILITY AS A RESULT OF THE CONTRACTORS OPERATIONS.
4. CLEAR ACCESS TO BERTH – PRIOR TO SCHEDULED IFA FERRY ARRIVALS, THE CONTRACTORS EQUIPMENT AND MATERIALS SHALL BE MOVED OR STORED IN LOCATIONS THAT WILL NOT AFFECT SAFE VESSEL ACCESS, BERTHING AND VEHICLE AND PEDESTRIAN TRANSFER OPERATIONS.
5. CONSTRUCTION PHASING PLAN – REFERENCE SECTION 202 OF THE SPECIAL PROVISIONS FOR THE REQUIREMENTS OF THE CONSTRUCTION PHASING PLAN. UNLESS OTHERWISE PERMITTED BY THE ENGINEER, THE CONTRACTOR SHALL NOT REMOVE MORE THAN ONE BERTHING STRUCTURE AT ANY ONE TIME. EXISTING STRUCTURES SHALL NOT BE REMOVED UNTIL NEW STRUCTURES ARE IN PLACE THAT WILL PROVIDE SUITABLE BERTHING OR MOORING FACILITIES FOR THE VESSEL. THE CONTRACTOR SHALL ASSIST THE VESSEL OR THE TERMINAL OPERATIONS PERSONNEL IN ATTACHING AND REMOVING MOORING LINES IF INACCESSIBLE DUE TO LACK OF ACCESS BY SHIP OR SHORE BASED STAFF.

Record Drawings have been reviewed by the Project Engineer, and represent to the best of my knowledge, the project as constructed.
PE V. Waller Date 12/10/15

40' 0 40' 80'
GRAPHIC SCALE (FT)

DRAWING SCALES ARE FOR FULL-SIZE SHEETS. IF NO SCALE SHOWN, USE DIMENSIONS.

DESIGNED BY: D. LOWELL
STATE OF ALASKA · DAVID H. LOWELL · CE-12614 · 49th · REGISTERED PROFESSIONAL ENGINEER
6/12/14
CHECKED BY: STAFF
DRAWN BY: STAFF

STATE OF ALASKA
DEPARTMENT OF TRANSPORTATION
& PUBLIC FACILITIES
SOUTHEAST REGION

CLARK BAY FERRY TERMINAL IMPROVEMENTS

NEW SITE PLAN

PATH: Q:\POW\67449\PLANSET\MF\05 – NEW SITE PLAN.DWG
TAB: 5 Thursday, June 12, 2014 12:27:24 PM LOWELL, DAVID H (DOT)

REVISIONS NO.	DATE	DESCRIPTION

PROJECT DESIGNATION	YEAR	SHEET NO.	TOTAL SHEETS
67449/0924019	2014	5	~~57~~

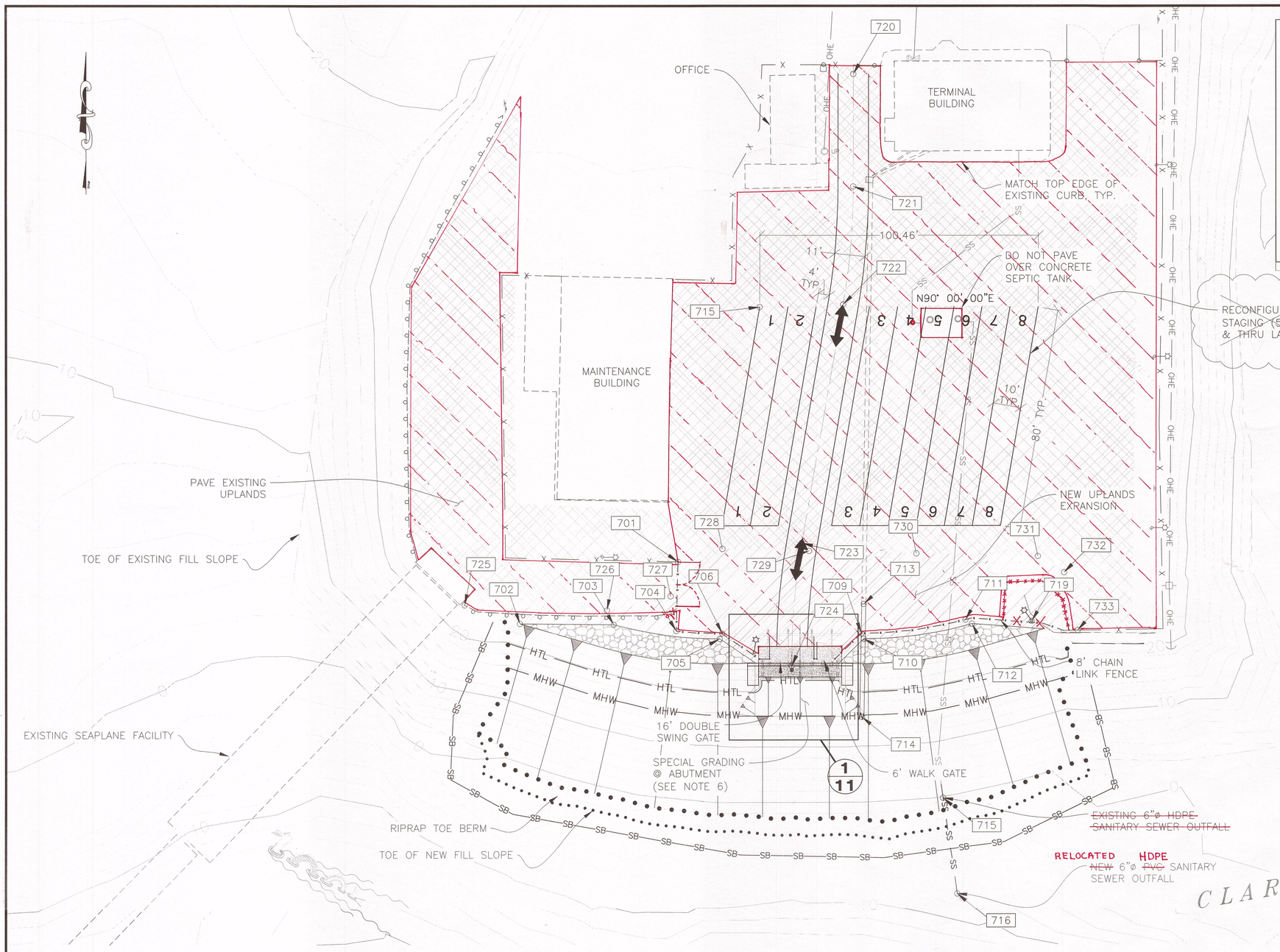

GENERAL NOTES

1. FOR COMPLETE LIST OF OBJECTS AND QUANTITIES TO BE REMOVED UNDER ITEM 202 (1), REFER TO THE SUMMARY SHEETS & SPECIFICATIONS.
2. EXISTING UNDERGROUND UTILITIES SHOWN ON THE PLANS ARE APPROXIMATE AND MUST BE FIELD VERIFIED. CONTACT THE RESPECTIVE LOCAL UTILITY OFFICE FOR FIELD LOCATES PRIOR TO EXCAVATION WORK PER SECTION 662.
3. DO NOT PAVE OVER EXISTING FLUSH-MOUNTED UTILITY PADS & INLETS WITHIN THE STAGING AREA.
4. REFER TO SHEET 5 FOR LIMITATIONS ON SCHEDULING DEMOLITION & OTHER CONSTRUCTION ACTIVITIES.
5. REFER TO SHEET 7 FOR LAYOUT POINT TABLE.
6. REFER TO SHEETS 11-12 FOR SPECIAL GRADING AT BRIDGE ABUTMENT.
7. SEE SHEETS 46-48 FOR ELECTRICAL WORK.

LEGEND

- ARMOR ROCK
- NEW ASPHALT PAVEMENT, ~~EXISTING GROUND~~ AS-BUILT
- ~~NEW ASPHALT PAVEMENT, UPLANDS EXPANSION~~
- LIMITS OF FILL
- #### LAYOUT POINT NUMBERS
- ~~SB SILT CONTAINMENT BOOM~~

IMPROVEMENTS PLAN

MARINE STRUCTURES NOT SHOWN FOR CLARITY

20' 0 20' 40'
GRAPHIC SCALE (FT)

Record Drawings have been reviewed by the Project Engineer, and represent to the best of my knowledge, the project as constructed.
PE [signature] Date 12/10/15

DRAWING SCALES ARE FOR FULL-SIZE SHEETS. IF NO SCALE SHOWN, USE DIMENSIONS.

DESIGNED BY: J. OSBURN
STATE OF ALASKA 49th JOEL D. OSBURN CE-11014 REGISTERED PROFESSIONAL ENGINEER
6/16/14
CHECKED BY: STAFF
DRAWN BY: STAFF

STATE OF ALASKA
DEPARTMENT OF TRANSPORTATION & PUBLIC FACILITIES
SOUTHEAST REGION

CLARK BAY FERRY TERMINAL IMPROVEMENTS

UPLANDS IMPROVEMENTS PLAN

PATH: Q:\POW\67449\PLANSET\MF\06 - UPLANDS IMPROVEMENTS.DWG
TAB: 6 Monday, June 16, 2014 12:19:07 PM LOWELL, DAVID H (DOT)

REVISIONS			PROJECT DESIGNATION	YEAR	SHEET NO.	TOTAL SHEETS
NO.	DATE	DESCRIPTION	67449/0924019	2014	6	~~57~~

61

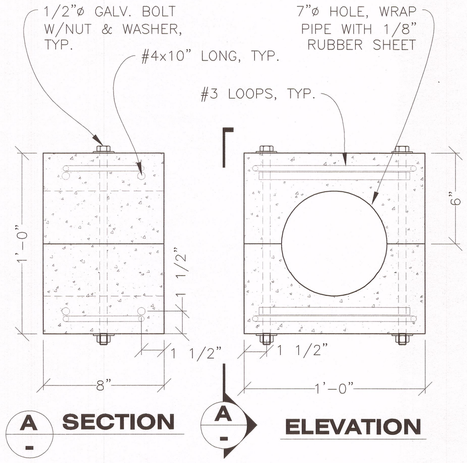

CONCRETE WEIGHT

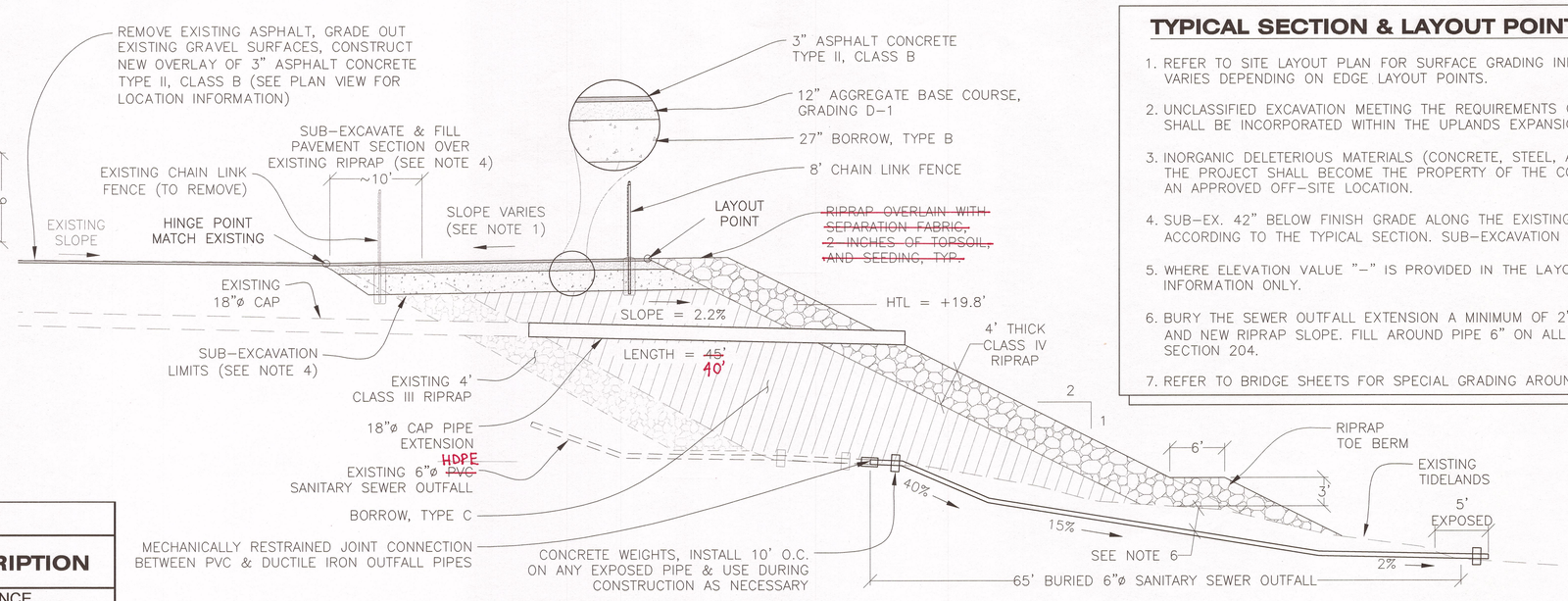

TYPICAL SECTION
UPLANDS EXPANSION

8' 0 8' 16'
GRAPHIC SCALE (FT)

TYPICAL SECTION & LAYOUT POINT TABLE NOTES:

1. REFER TO SITE LAYOUT PLAN FOR SURFACE GRADING INFORMATION. PAVEMENT SLOPE VARIES DEPENDING ON EDGE LAYOUT POINTS.
2. UNCLASSIFIED EXCAVATION MEETING THE REQUIREMENTS OF SELECTED MATERIAL, TYPE C SHALL BE INCORPORATED WITHIN THE UPLANDS EXPANSION FILL EMBANKMENT.
3. INORGANIC DELETERIOUS MATERIALS (CONCRETE, STEEL, ASPHALT, ETC.) REMOVED FROM THE PROJECT SHALL BECOME THE PROPERTY OF THE CONTRACTOR AND DISPOSED OF AT AN APPROVED OFF-SITE LOCATION.
4. SUB-EX. 42" BELOW FINISH GRADE ALONG THE EXISTING RIPRAP SLOPE AND FILL ACCORDING TO THE TYPICAL SECTION. SUB-EXCAVATION IS SUBSIDIARY TO ITEM 203 (3).
5. WHERE ELEVATION VALUE "-" IS PROVIDED IN THE LAYOUT TABLE, USE PLAN LOCATION INFORMATION ONLY.
6. BURY THE SEWER OUTFALL EXTENSION A MINIMUM OF 2' BELOW EXISTING TIDELANDS AND NEW RIPRAP SLOPE. FILL AROUND PIPE 6" ON ALL SIDES WITH MATERIAL MEETING SECTION 204.
7. REFER TO BRIDGE SHEETS FOR SPECIAL GRADING AROUND THE BRIDGE ABUTMENT.

LAYOUT POINT TABLE

PNT. #	NORTH	EAST	ELEV.	DESCRIPTION
701	200,006.39	599,866.93	-	FENCE
702	199,984.09	599,809.86	23.50'	RIPRAP
703	199,983.73	599,843.84	23.75'	RIPRAP
704	199,981.48	599,866.34	-	FENCE
705	199,978.57	599,881.90	24.75'	RIPRAP
706	199,980.54	599,882.75	-	FENCE
707	199,971.31	599,896.25	-	FENCE
709	199,980.54	599,933.05	-	FENCE
710	199,978.57	599,933.90	25.00'	RIPRAP
711	199,985.43	599,970.58	-	FENCE
712	199,984.01	599,972.93	25.00'	RIPRAP
713	199,991.14	599,933.87	16.35'	P1_IN
714	199,950.41	599,933.10	15.45'	P1_OUT
715	199,921.22	599,962.40	-1.85'	OUTFALL_CONNECT
716	199,886.68	599,967.55	-6.50'	OUTFALL_END
718	199,973.61	599,894.28	-	RE-LOCATE LIGHT POLE
719	199,984.91	599,994.49	-	RE-LOCATE LIGHT POLE
720	200,182.36	599,930.14	-	CL_DRIVE LANE_BEGIN
721	200,141.79	599,930.14	-	PC_R=250
722	200,099.10	599,926.47	-	PT
723	200,013.14	599,911.57	-	PC_R=250
724	199,968.81	599,907.90	-	PT
725	199,990.78	599,789.98	24.06'	HINGE POINT
726	199,988.90	599,841.39	23.81'	HINGE POINT
727	199,993.94	599,864.32	23.96'	HINGE POINT
728	200,011.01	599,882.86	24.31'	HINGE POINT
729	200,010.27	599,914.18	24.21'	HINGE POINT
730	200,009.35	599,952.83	24.13'	HINGE POINT
731	200,008.32	599,996.68	24.59'	HINGE POINT
732	200,002.44	600,006.18	24.65'	HINGE POINT
733	199,981.60	600,011.05	24.54'	HINGE POINT
734	199,968.82	599,910.90	25.00'	ABUTMENT

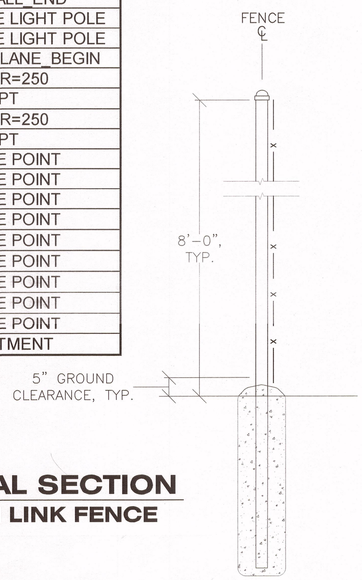

TYPICAL SECTION
CHAIN LINK FENCE

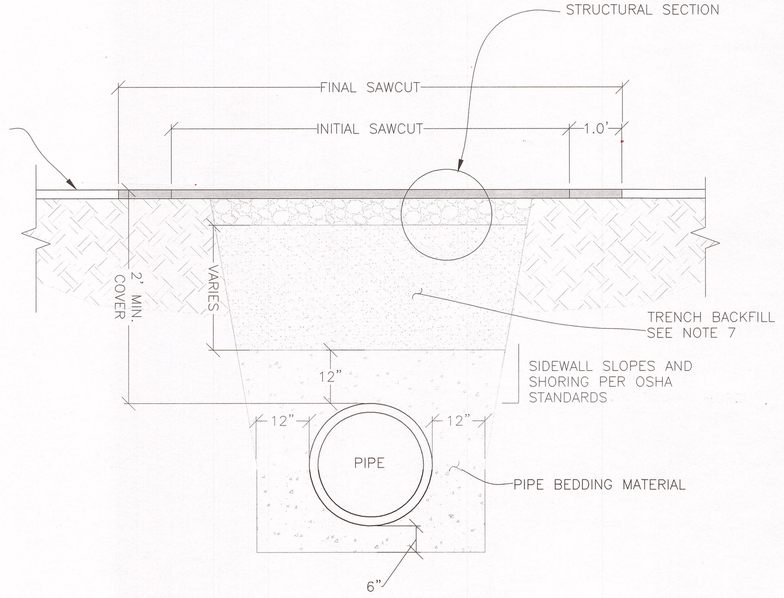

DETAIL
TYPICAL TRENCH

FENCE & TRENCHING NOTES:

1. FOR FENCE & SWING GATE DETAILS, REFER TO STANDARD DRAWINGS F-01.01 & F-03.01.
2. THE CONTRACTOR SHALL VERIFY EXISTING FIELD DIMENSIONS PRIOR TO ORDERING FENCING MATERIALS.
3. THE CONTRACTOR SHALL CONTACT THE LOCAL UTILITY COMPANIES TO OBTAIN FIELD LOCATES OF UNDERGROUND UTILITIES PRIOR TO EXCAVATION WORK.
4. THE CONTRACTOR SHALL PRODUCE 1-FOOT OF 3/8" GALV. CHAIN AND KEYED PADLOCK FOR THE FENCE GATE. PADLOCK SHALL BE ALL-WEATHER COMMERCIAL GRADE BRUSHED BRASS ABUS 831C/50 MODEL OR APPROVED EQUAL. LOCKS SHALL HAVE CYLINDERS WITH SEVEN-PIN TUMBLERS AND REMOVABLE CORES WITH 'E' KEY WAY. PROVIDE FOUR COPIES OF KEYS TO IFA TERMINAL MANAGER.
5. MAINTAIN ADEQUATE COVER OVER ALL ROADWAY PIPE CROSSINGS TO PREVENT DAMAGE TO PIPES FROM TRAFFIC. MINIMUM COVER SHALL BE NO LESS THAN 2 FT. WHERE LOADS TRAVERSE THE PIPE DURING CONSTRUCTION, MINIMUM COVER SHALL BE NO LESS THAN 3 FT.
6. ANY GRAVEL SURFACED TRENCH CROSSINGS SHALL BE MAINTAINED UNTIL NEW PAVEMENT IS PLACED.
7. CONTRACTOR SHALL INCORPORATE USEABLE EXCAVATED MATERIALS IN TRENCH BACKFILL EXCEPT WHERE EXISTING MATERIALS ARE DETERMINED TO BE UNSUITABLE BY THE ENGINEER FOR RE-USE. IMPORT OF SELECTED MATERIALS FOR TRENCH BACKFILL BELOW 42" FROM THE TOP SURFACE SHALL ONLY BE UTILIZED AND PAID FOR WHEN AUTHORIZED BY THE ENGINEER. TRENCH BACKFILL SHALL MEET GRADATION REQUIREMENTS FOR SELECTED MATERIAL, TYPE B.

DRAWING SCALES ARE FOR FULL-SIZE SHEETS. IF NO SCALE SHOWN, USE DIMENSIONS.

Record Drawings have been reviewed by the Project Engineer, and represent to the best of my knowledge, the project as constructed.
PE [signature] Date 12/10/15

DESIGNED BY: J. OSBURN
STATE OF ALASKA JOEL D. OSBURN 49th CE-11014 REGISTERED PROFESSIONAL ENGINEER
6/16/14
CHECKED BY: STAFF
DRAWN BY: STAFF
PATH: Q:\POW\67449\PLANSET\MF\07 - UPLANDS TYP_LAYOUTPTS_MISCDETS.DWG
TAB: 7 Monday, June 16, 2014 12:00:53 PM LOWELL, DAVID H (DOT)

STATE OF ALASKA
DEPARTMENT OF TRANSPORTATION & PUBLIC FACILITIES
SOUTHEAST REGION

CLARK BAY FERRY TERMINAL IMPROVEMENTS

UPLANDS TYPICAL SECTION/LAYOUT POINT TABLE/MISC. DETAILS

REVISIONS NO.	DATE	DESCRIPTION	PROJECT DESIGNATION	YEAR	SHEET NO.	TOTAL SHEETS
			67449/0924019	2014	7	~~57~~

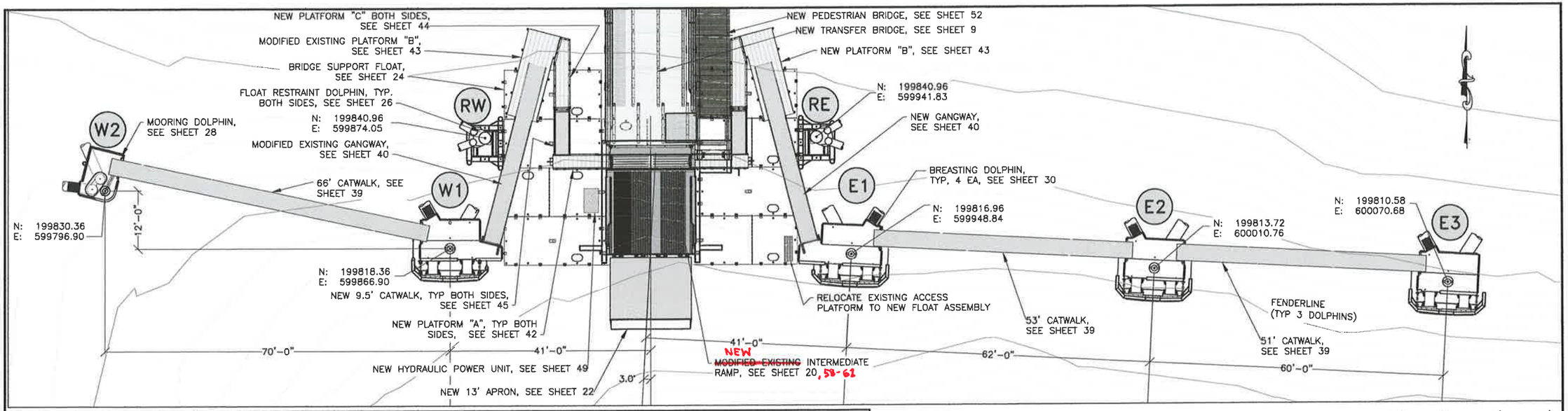

PILE DATA

STRUCTURE	PILE	PILE SIZE	ULTIMATE CAPACITY (kips)		ELEVATION (ft)			TENSION ANCHOR	EST. PILE LENGTH 18"Ø	EST. PILE LENGTH 24"Ø	EST. PILE LENGTH 30"Ø
			UPLIFT	BEARING	EST. MUDLINE	EST. TIP	CUTOFF				
W1	VERTICAL 1	30"Ø x 1/2"	250	190	-34	-75	+23	X			98
	VERTICAL 2		250	190	-35	-75	+23	X			98
	BATTER 1		310	300	-27	-65	+30	X			100
	BATTER 2		310	300	-28	-65	+30	X			100
W2	VERTICAL 1	24"Ø x 1/2"	-	540	-27	-60	+24			84	
	BATTER 1		250	-	-26	-60	+30	X		95	
	BATTER 2		250	-	-24	-60	+30	X		95	
E1	VERTICAL 1	30"Ø x 1/2"	250	190	-37	-80	+23	X			103
	VERTICAL 2		250	190	-38	-80	+23	X			103
	BATTER 1		310	300	-28	-65	+30	X			100
	BATTER 2		310	300	-28	-65	+30	X			100
E2	VERTICAL 1	30"Ø x 1/2"	250	190	-38	-87	+23	X			110
	VERTICAL 2		250	190	-37	-87	+23	X			110
	BATTER 1		310	300	-27	-75	+30	X			111
	BATTER 2		310	300	-26	-75	+30	X			111
E3	VERTICAL 1	30"Ø x 1/2"	250	190	-32	-87	+23	X			110
	VERTICAL 2		250	190	-32	-87	+23	X			110
	BATTER 1		310	300	-22	-90	+30	X*			127
	BATTER 2		310	300	-21	-90	+30	X**			127
RW	VERTICAL 1	30"Ø x 1/2"	310	420	-28	-65	+39	X			104
	BATTER 1	18"Ø x 1/2"	200	215	-30	-68	+44	X	119		
	BATTER 2		200	215	-23	-63	+44	X	114		
RE	VERTICAL 1	30"Ø x 1/2"	310	420	-26	-65	+39	X			104
	BATTER 1	18"Ø x 1/2"	200	215	-21	-63	+44	X	114		
	BATTER 2		200	215	-31	-68	+44	X	119		
						EST. TOTAL LENGTH (ft) =			466	274	1926

NOTES:

1. THE CONTRACTOR SHALL SUBMIT A PILE INSTALLATION PLAN IN ACCORDANCE WITH THE SPECIFICATIONS.
2. ALL PILE WORK SHALL BE PER SECTION 505. PILE INSTALLATION SHALL BE CONDUCTED WITH THE ENGINEER OR DEPARTMENT'S REPRESENTATIVE PRESENT.
3. DRIVE ALL PILES TO REFUSAL ON ROCK AND INSTALL TENSION PILE ANCHOR IN ACCORDANCE WITH THE PLANS AND SECTION 518 OF THE SPECIFICATIONS.
4. FOR THE PURPOSES OF ANCHORING, TAKE THE TEST LOAD = ULTIMATE UPLIFT CAPACITY AND LOCK-OFF LOAD = 0.60 * ULTIMATE UPLIFT CAPACITY LISTED IN THE PILE DATA TABLE.
5. ALL PILES SHALL BE FITTED WITH OPEN-END DRIVING SHOES, APF 14001 OR EQUAL.

* TEST LOAD = LOCKOFF LOAD = 105 KIPS
** TEST LOAD = LOCKOFF LOAD = 23 KIPS

10' 0 10' 20'
GRAPHIC SCALE (FT)

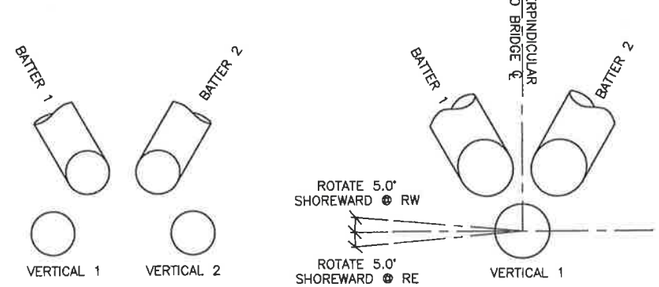

4 PILE DOLPHIN

3 PILE DOLPHIN

Record Drawings have been reviewed by the Project Engineer, and represent to the best of my knowledge, the project as constructed.

PE [signature] Date 12/16/15

SUMMARY OF CHANGES:
1. ROTATE CAP SHOREWARD 5° FOR STRUCTURES RW AND RE.

DRAWING SCALES ARE FOR FULL-SIZE SHEETS. IF NO SCALE SHOWN, USE DIMENSIONS.

DESIGNED BY: D. LOWELL
CHECKED BY: STAFF
DRAWN BY: STAFF

STATE OF ALASKA
DEPARTMENT OF TRANSPORTATION & PUBLIC FACILITIES
SOUTHEAST REGION

CLARK BAY FERRY TERMINAL IMPROVEMENTS

MARINE SITE PLAN & PILE DATA

PATH: O:\POW\67449\MF\CONSTRUCTION\FLOAT RESTRAINTS\08 - MARINE SITE PLAN & PILE DATA.REV 4
TAB: 8 Wednesday, April 22, 2015 3:08:47 PM LOWELL, DAVID H (DOT)

REVISIONS NO.	DATE	DESCRIPTION	PROJECT DESIGNATION	YEAR	SHEET NO.	TOTAL SHEETS
3	4.22.15	RESTRAINT MOD	67449/0924019	2014	8	~~57~~

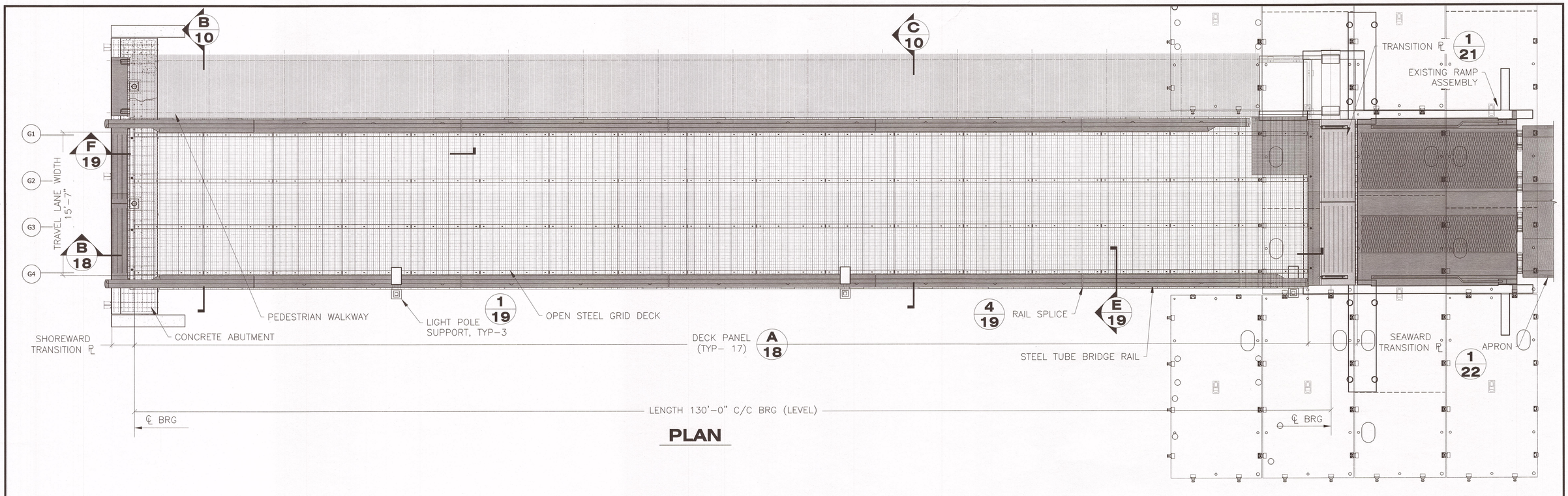

PLAN

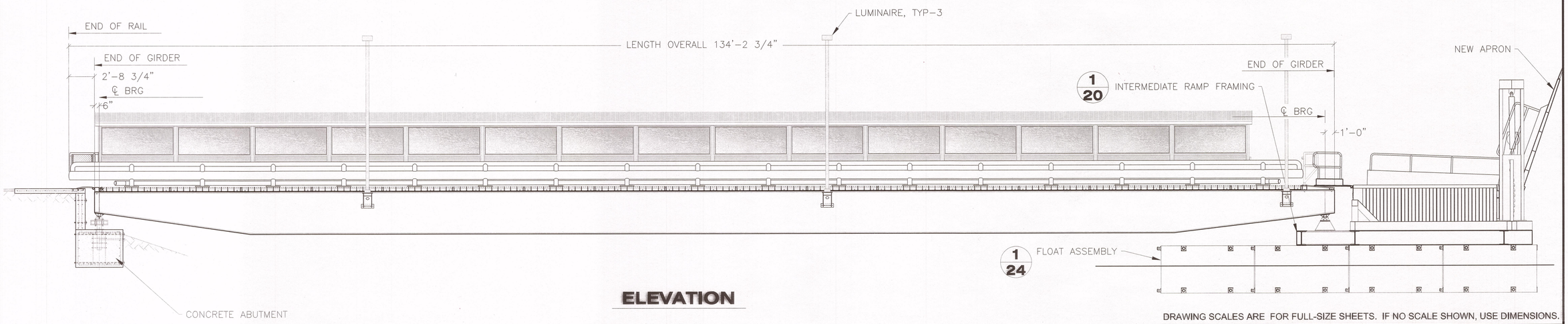

ELEVATION

DRAWING SCALES ARE FOR FULL-SIZE SHEETS. IF NO SCALE SHOWN, USE DIMENSIONS.

Record Drawings have been reviewed by the Project Engineer, and represent to the best of my knowledge, the project as constructed.

PE _____ Date 12/10/15

DESIGNED BY: T. DOGGETT

STATE OF ALASKA
49th
TIMOTHY H. DOGGETT
CE-9027
REGISTERED PROFESSIONAL ENGINEER
6/16/14

CHECKED BY: STAFF

DRAWN BY: STAFF

PATH: Q:\POW\67449\PLANSET\MF\09-10, 16-19 BRIDGE.DWG

TAB: 9 Monday, June 16, 2014 12:23:11 PM LOWELL, DAVID H (DOT)

STATE OF ALASKA
DEPARTMENT OF TRANSPORTATION
& PUBLIC FACILITIES
SOUTHEAST REGION

CLARK BAY FERRY TERMINAL IMPROVEMENTS

130' TRANSFER BRIDGE PLAN & ELEVATION

REVISIONS			PROJECT DESIGNATION	YEAR	SHEET NO.	TOTAL SHEETS
NO.	DATE	DESCRIPTION	67449/0924019	2014	9	~~57~~

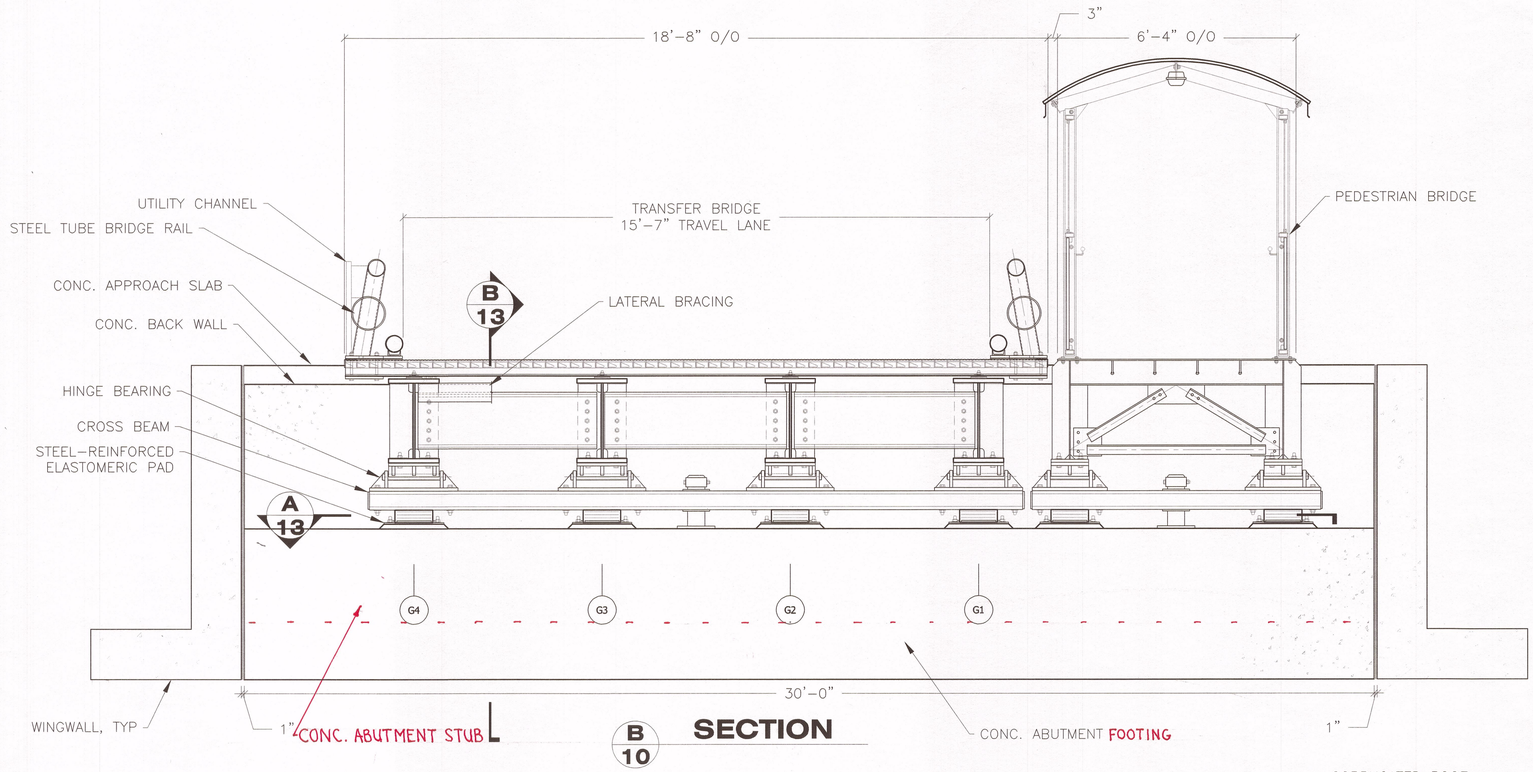

B 10 **SECTION**

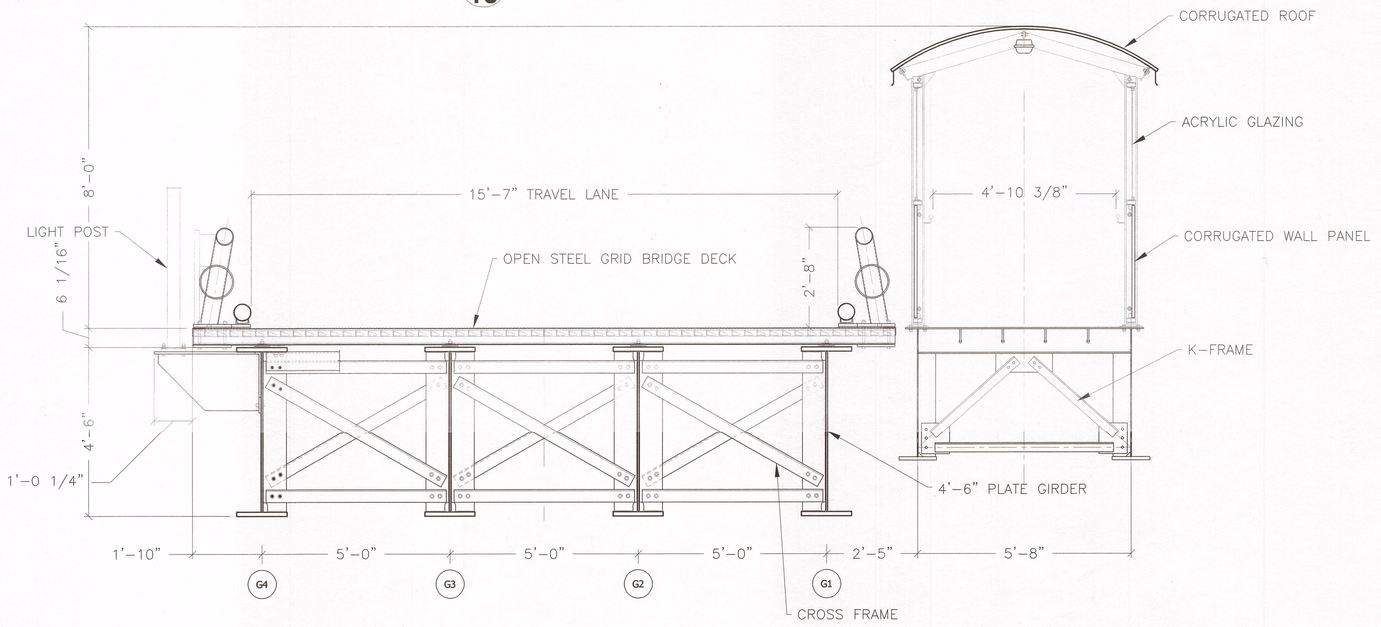

C 10 **SECTION**

NOTES: FOLLOWING APPLY TO TRANSFER BRIDGE.

DESIGN SPECIFICATIONS:
AASHTO LRFD BRIDGE DESIGN SPECIFICATIONS 4TH ED./2007 WITH 2008 INTERIM REVISIONS
AISC STEEL CONSTRUCTION MANUAL 13TH ED. LRFD.

DESIGN BASIS:
LIVE LOAD – HL-93
BASIC WIND SPEED – VFM = 100 MPH
MULTIPLE PRESENCE FACTOR = 1.08 (ADTT<100)
DYNAMIC ALLOWANCE = 1.33 LIVE. 1.15 FATIGUE
DEFLECTION CRITERIA – LL DEFLECTION < SPAN/800
As (SITE CLASS E) = 0.254 g

MATERIALS: ALL STRUCTURAL STEEL SHALL BE PRODUCED DOMESTICALLY.

PLATE GIRDER FLANGES & WEB	ASTM A709 GR50
STIFFENERS, CONNECTION PLATES, AND MISC. PLATE	ASTM A709 GR50
CROSS FRAMES, DIAPHRAGMS, LATERAL BRACING	ASTM A709 GR36
W-SECTIONS	ASTM A709 GR50
HOLLOW STRUCTURAL SECTIONS	ASTM A500 GRB
PIPE	ASTM A53 GRB, API 5L-X42 PSL 2
HEX HEAD BOLTS, WASHER & NUTS	ASTM A325 TYPE I, F436, F959, & A563 GR DH
OPEN GRID RECTANGULAR STEEL DECK: 5 3/16" DEEP 5.6# RIBBED MAIN RAILS AT 8" OC, (2) 1"x1/4" SUPPLEMENTAL BARS EQ SPACED, & 2"x1/4" CROSS BARS AT 4" OC. TOP SURFACES SERRATED.	ASTM A709 GR50
CONCRETE REINFORCEMENT (GALVANIZED)	ASTM A767
CONCRETE	SECTION 501 CLASS A-A

CHARPY V-NOTCH:
DESIGN DRAWINGS IDENTIFY THE MAIN LOAD CARRYING MEMBERS. ALL STRUCTURAL STEEL AS DESIGNATED ON THE PLANS SHALL RECEIVE CHARPY V-NOTCH TESTING FOR TEMPERATURE ZONE 2 IN ACCORDANCE WITH ASTM A709 AS NOTED BELOW:

1. TENSION COMPONENTS OF REDUNDANT MEMBERS, DESIGNATED "T" ON THE PLANS, SHALL BE TESTED IN ACCORDANCE WITH TABLE 8 OF ASTM A709.
2. TENSION COMPONENTS OF FRACTURE CRITICAL MEMBERS, DESIGNATED "F" ON THE PLANS, SHALL BE TESTED IN ACCORDANCE WITH TABLE 9 OF ASTM A709.
3. NON-TENSION COMPONENTS OF SECONDARY MEMBERS ARE UNMARKED AND DO NOT REQUIRE IMPACT TESTING.

STEEL FABRICATION:
ALL STRUCTURAL STEEL FABRICATION SHALL OCCUR IN AN AISC CERTIFIED PLANT, CATEGORY IBR (CERTIFIED BRIDGE FABRICATOR – INTERMEDIATE).

WELDING:
WELDING DETAILS AND WELDING OPERATIONS SHALL BE IN ACCORDANCE WITH THE CURRENT EDITION OF THE AASHTO/AWS D1.5 BRIDGE WELDING CODE. WELDING OF TUBULAR ELEMENTS AND STAINLESS STEELS SHALL BE IN ACCORDANCE WITH THE CURRENT EDITION OF AWS D1.1 STRUCTURAL WELDING CODE – STEEL AND D1.6 STRUCTURAL WELDING CODE – STAINLESS STEEL, RESPECTIVELY. WELDING PROCEDURES SHALL BE SUBMITTED AND APPROVED PRIOR TO WELDING ON PROJECT. NONDESTRUCTIVE TESTING SHALL BE PERFORMED AS REQUIRED BY AASHTO/AWS D1.5 BRIDGE WELDING CODE.

BOLTED CONNECTIONS:
UNLESS OTHERWISE NOTED, ALL BOLTED CONNECTIONS ARE PRETENSIONED JOINTS USING 7/8" DIAMETER ASTM A325 BOLTS. PRETENSION ACCORDING TO "SPECIFICATION FOR STRUCTURAL JOINTS USING ASTM A325 OF A490 BOLTS" (RCSC) METHOD 8.2.4 DIRECT-TENSION-INDICATOR PRETENSIONING. INSPECT IN ACCORDANCE WITH 9.2 PRETENSIONED JOINTS. AS NOTED ON THE PLANS, HARDENED AND/OR PLATE WASHERS ARE REQUIRED AT SLOTTED AND OVERSIZE HOLES.

PROTECTIVE COATINGS:
PLATE GIRDERS SHALL BE SPRAY METALLIZED WITH ZN OR ZN/AL ALLOY, COATED WITH EPOXY SEALER AND TOP COATED WITH POLYURETHANE IN CONFORMANCE WITH PROJECT SPECS. (SECTION 513 – SYSTEM 10), SSPC-CS 23.00, AND AWS C2.18.

ALL ITEMS BOLTED TO THE PLATE GIRDERS, SUCH AS MISCELLANEOUS SHAPES, CROSS FRAMES, DIAPHRAGMS, RAILS, PLATES, HINGES, AND DECKING, SHALL BE HOT DIP GALVANIZED IN CONFORMANCE WITH ASTM A123.

THE SURFACES OF TRANSITION PLATES SUBJECT TO PEDESTRIAN TRAFFIC SHALL BE COATED WITH NON-SKID COATING IN CONFORMANCE WITH PROJECT SPECTS. (SECTION 513 – SYSTEM 7A OR 7B, AS INDICATED ON THE PLANS).

Record Drawings have been reviewed by the Project Engineer, and represent to the best of my knowledge, the project as constructed.
PE [signature] Date 12/16/15

DRAWING SCALES ARE FOR FULL-SIZE SHEETS. IF NO SCALE SHOWN, USE DIMENSIONS.

DESIGNED BY: T. DOGGETT
STATE OF ALASKA 49th TIMOTHY H. DOGGETT CE-9027 REGISTERED PROFESSIONAL ENGINEER
6/16/14
CHECKED BY: STAFF
DRAWN BY: STAFF

STATE OF ALASKA
DEPARTMENT OF TRANSPORTATION
& PUBLIC FACILITIES
SOUTHEAST REGION

CLARK BAY FERRY TERMINAL IMPROVEMENTS

130' TRANSFER BRIDGE TYP SECTIONS & GENERAL NOTES

PATH: Q:\POW\67449\PLANSET\MF\09-10, 16-19 BRIDGE.DWG
TAB: 10 Monday, June 16, 2014 12:24:37 PM LOWELL, DAVID H (DOT)

REVISIONS NO.	DATE	DESCRIPTION

PROJECT DESIGNATION	YEAR	SHEET NO.	TOTAL SHEETS
67449/0924019	2014	10	~~57~~

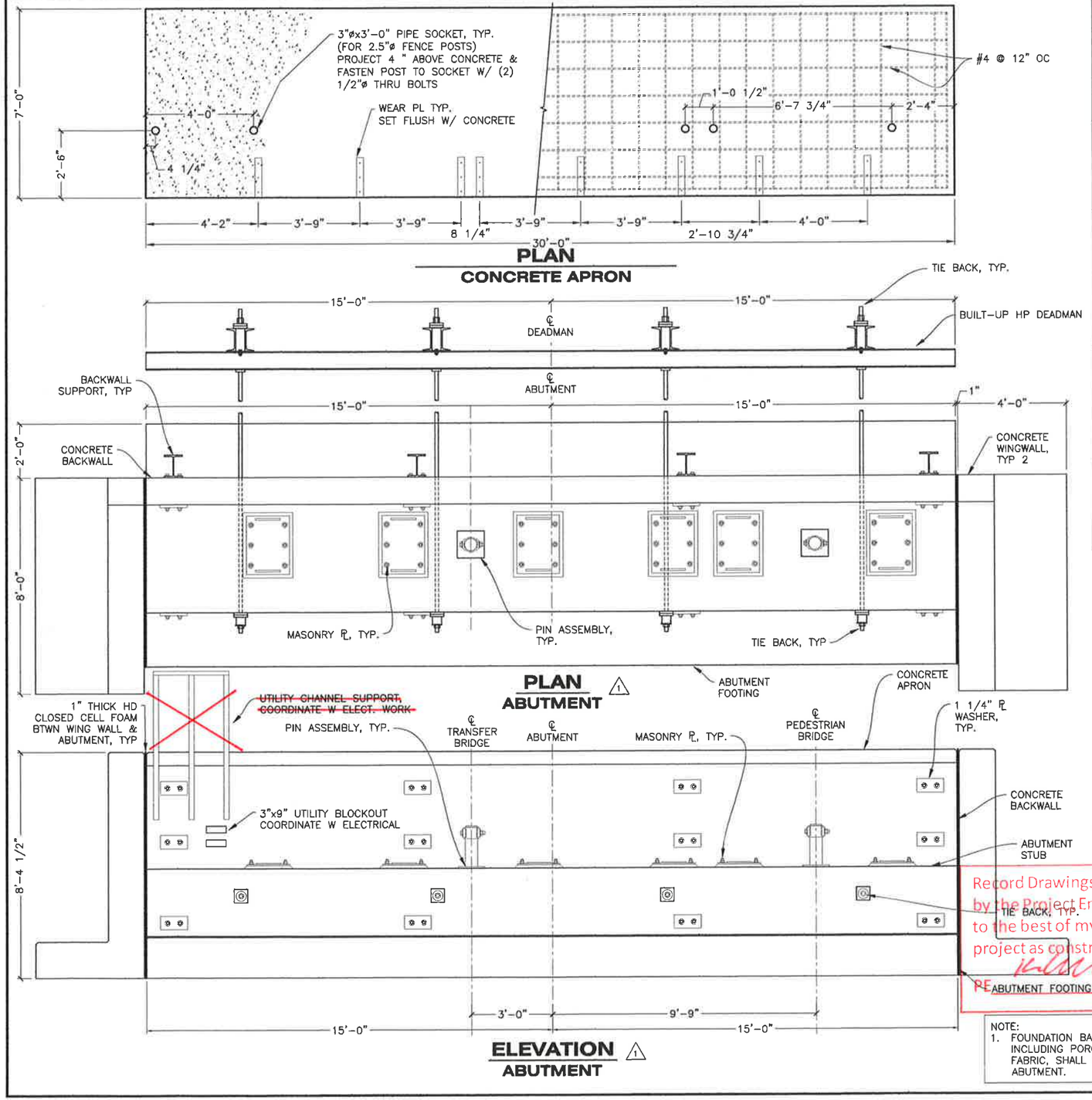

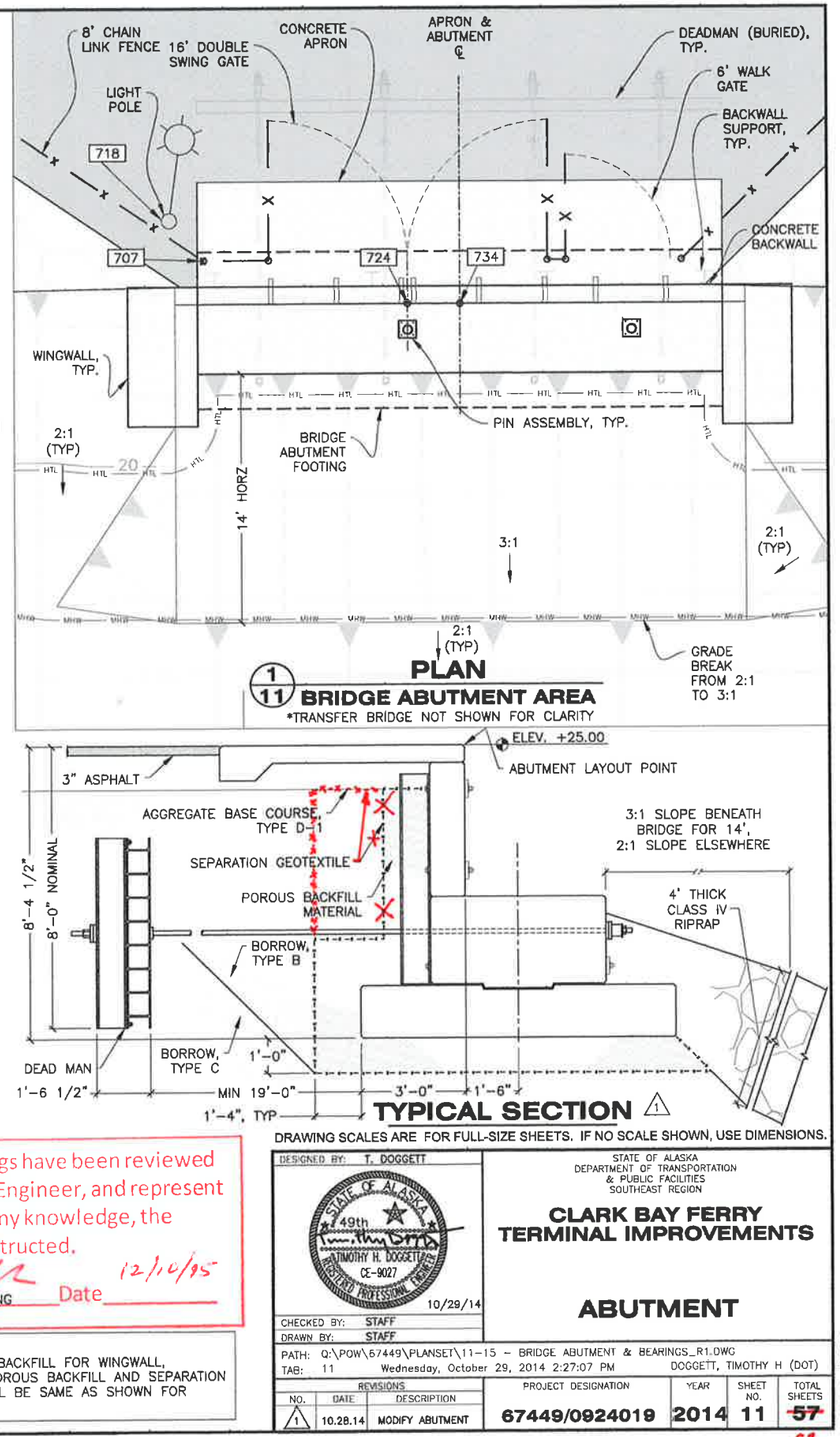

Record Drawings have been reviewed by the Project Engineer, and represent to the best of my knowledge, the project as constructed.

PE ABUTMENT FOOTING Date 12/10/15

NOTE:
1. FOUNDATION BACKFILL FOR WINGWALL, INCLUDING POROUS BACKFILL AND SEPARATION FABRIC, SHALL BE SAME AS SHOWN FOR ABUTMENT.

DESIGNED BY: T. DOGGETT
DRAWN BY: STAFF
CHECKED BY: STAFF
10/29/14

STATE OF ALASKA
DEPARTMENT OF TRANSPORTATION & PUBLIC FACILITIES
SOUTHEAST REGION

CLARK BAY FERRY TERMINAL IMPROVEMENTS

ABUTMENT

PATH: Q:\POW\67449\PLANSET\11-15 - BRIDGE ABUTMENT & BEARINGS_R1.DWG
TAB: 11 Wednesday, October 29, 2014 2:27:07 PM DOGGETT, TIMOTHY H (DOT)

REVISIONS NO.	DATE	DESCRIPTION	PROJECT DESIGNATION	YEAR	SHEET NO.	TOTAL SHEETS
1	10.28.14	MODIFY ABUTMENT	67449/0924019	2014	11	~~57~~

RFP #02

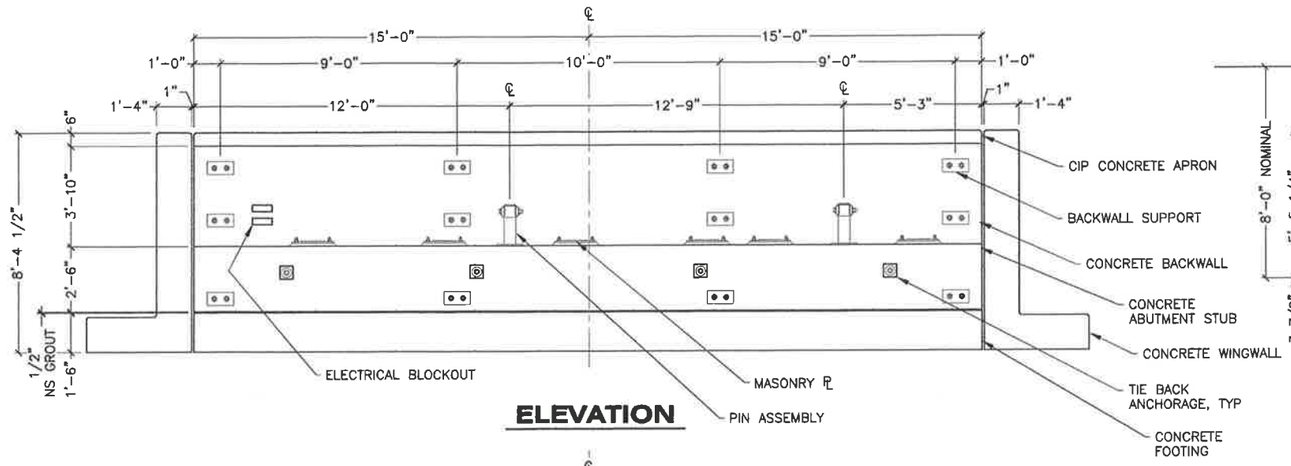

ELEVATION

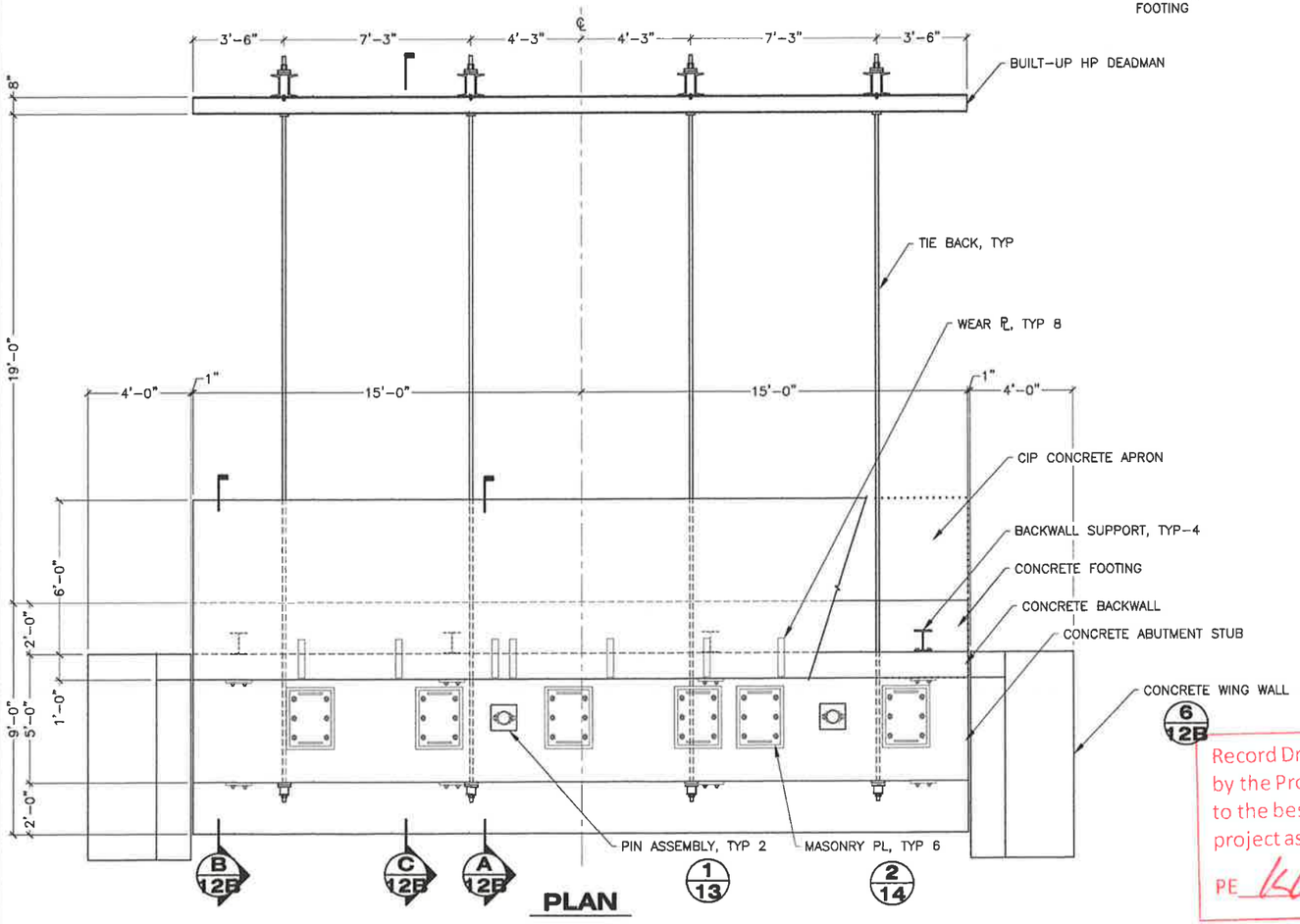

PLAN

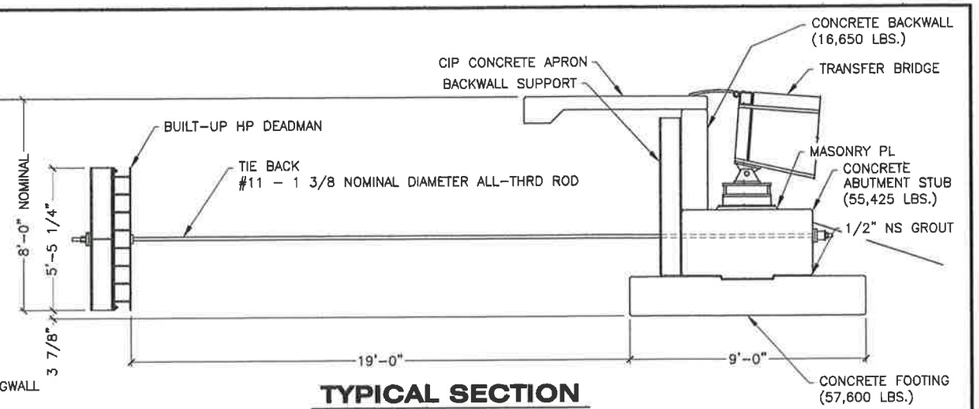

TYPICAL SECTION

GENERAL NOTES:

1. ABUTMENT STUB, FOOTING, BACKWALL, AND WING WALLS SHALL BE PRECAST COMPONENTS OF CLASS P CONCRETE WITH SPECIFIED COMPRESSIVE STRENGTH OF 5,000 PSI. APRON SHALL BE CAST-IN-PLACE USING CLASS A-A CONCRETE.
2. TOP SURFACE OF APRON SHALL BE NON-SKID, BROOM FINISH. ALL OTHER COMPONENTS ARE ORDINARY FINISH. CHAMFER ALL EDGES 3/4"x3/4", UON.
3. ALL REINFORCING STEEL SHALL BE ASTM 615 GR 60 AND HOT DIP GALVANIZED TO ASTM A767 CLASS I COATING AFTER FABRICATION. CONCRETE COVER TO REINFORCEMENT IS 3" UNLESS OTHERWISE NOTED. MINIMUM BEND DIAMETER AND STANDARD HOOK DIMENSIONS PER ACI 318. REINFORCEMENT THAT IS JOINED BY WELDING SHALL BE ASTM A706 GR 60 AND WELDED IN ACCORDANCE WITH AWS D1.9.
4. TIE BACK RODS ARE GRADE 75 ALL-THREAD BARS MEETING ASTM A615.
5. TIE BACK RODS, HARDWARE, STEEL SHAPES, LIFTING DEVICES AND EMBEDDED ITEMS SHALL BE HOT DIP GALVANIZED TO ASTM A123.
6. SLEEVES FOR PRE-FORMED BOLT HOLES ARE PVC PIPE, SCH 40.
7. LIFTING DEVICES SHALL BE DESIGNED BY THE MANUFACTURER'S REGISTERED PROFESSIONAL ENGINEER FOR REVIEW BY THE DEPARTMENT. LIFTING DEVICES THAT ARE NOT EXPOSED IN THE COMPLETED STRUCTURE MAY REMAIN, OTHERS SHALL BE RECESSED AT LEAST 2" AND COVERED WITH EPOXY GROUT.
8. SHIM ABUTMENT STUB ON FOOTING USING PLASTIC OR RUBBER SHIMS AND BOND STUB TO FOOTING WITH NON-SHRINK GROUT.
9. MEMBER WEIGHTS ASSUME CONCRETE DENSITY OF 145 PCF.

REINFORCEMENT SCHEDULE

ID	SIZE	QTY	TYPE		DIMENSION (INCHES)						
		(EA)		A	B	C	D	E	F	G
A401	#4	30	T2	4.5	6.0	40.0	6.0	40.0		4.5
A402	#4	60	T2	4.5	40.0	24.0	40.0	24.0		4.5
A403	#4	60	T2	4.5	66.0	12.0	66.0	12.0		4.5
A404	#4	1	T2	4.5	18.0	18.0	18.0	18.0		4.5

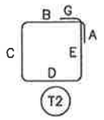

1. ALL DIMENSIONS ARE OUT-TO-OUT OF BAR.

Record Drawings have been reviewed by the Project Engineer, and represent to the best of my knowledge, the project as constructed.

PE _____ Date 12/16/15

DRAWING SCALES ARE FOR FULL-SIZE SHEETS. IF NO SCALE SHOWN, USE DIMENSIONS.

DESIGNED BY: T. DOGGETT

STATE OF ALASKA
TIMOTHY H. DOGGETT
CE-9027
REGISTERED PROFESSIONAL ENGINEER
10/30/14

CHECKED BY: STAFF

DRAWN BY: STAFF

PATH: Q:\POW\67449\PLANSET\REVISED DWGS\ABUTMENT MODS R_1\12A – B ABUTMENT_R1.DWG
TAB: 12A Thursday, October 30, 2014 3:20:08 PM DOGGETT, TIMOTHY H (DOT)

STATE OF ALASKA
DEPARTMENT OF TRANSPORTATION
& PUBLIC FACILITIES
SOUTHEAST REGION

CLARK BAY FERRY TERMINAL IMPROVEMENTS

PRECAST ABUTMENT

REVISIONS NO.	DATE	DESCRIPTION	PROJECT DESIGNATION	YEAR	SHEET NO.	TOTAL SHEETS
			67449/0924019	2014	12A	~~57~~ 61

RFP #02

Record Drawings have been reviewed by the Project Engineer, and represent to the best of my knowledge, the project as constructed.
PE [signature] Date 12/16/15

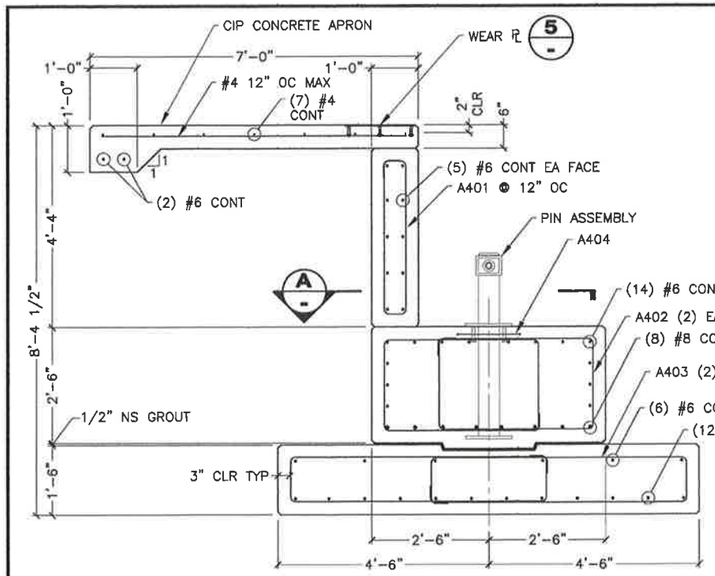

A/10 **SECTION**

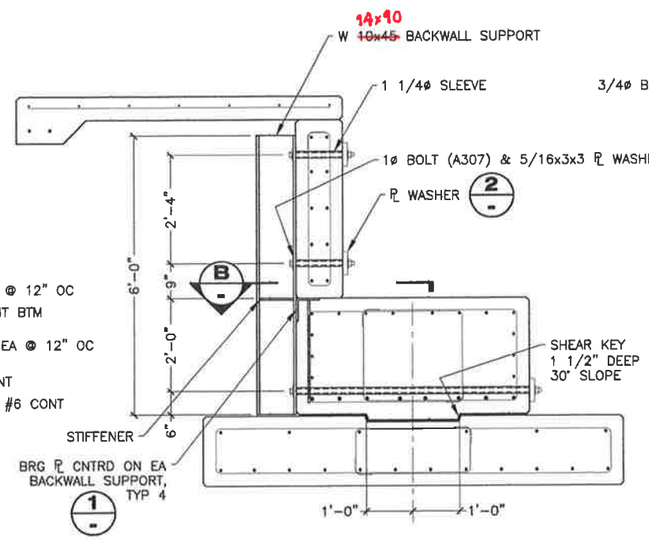

B/10 **SECTION**
REINFORCEMENT SIMILAR TO SECTION A

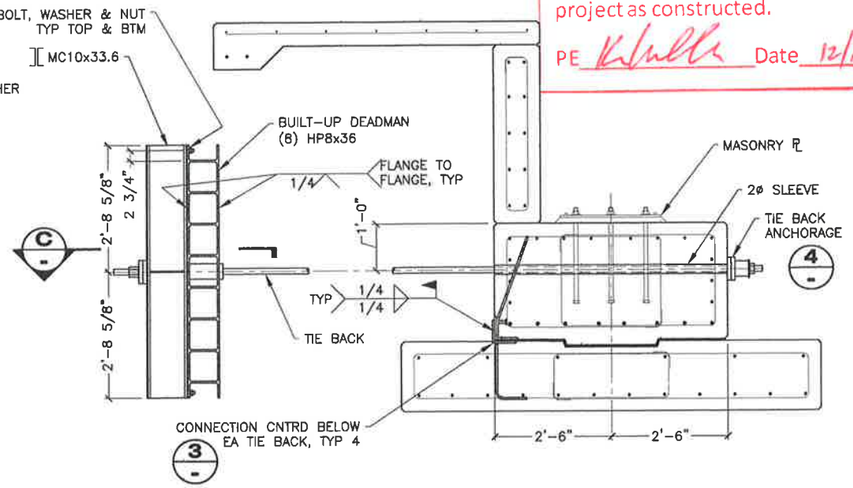

C/10 **SECTION**
REINFORCEMENT SIMILAR TO SECTION A

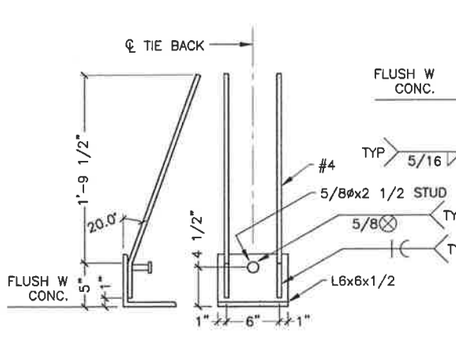

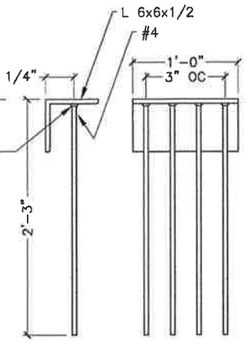

1 **DETAIL**

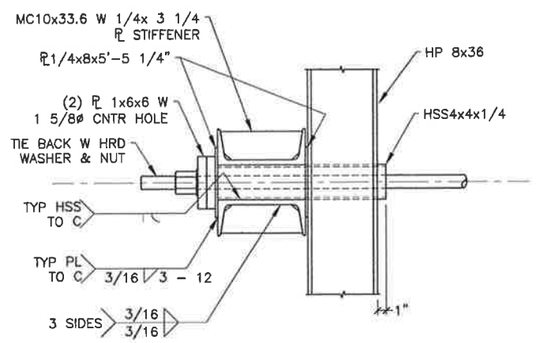

C **SECTION**

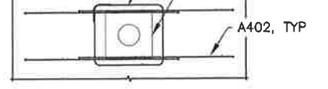

A **SECTION**

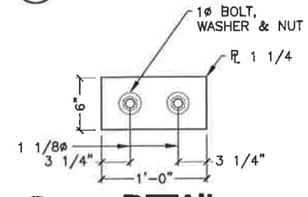

2 **DETAIL**

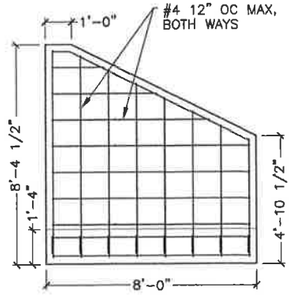

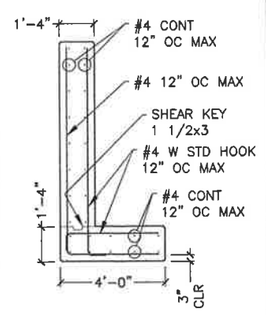

6/12B **DETAIL**

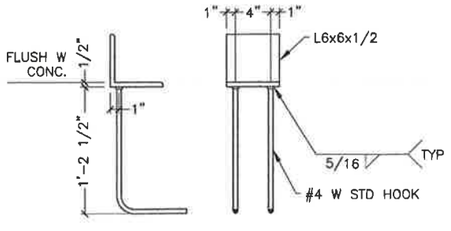

3 **DETAIL**

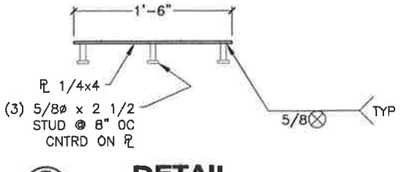

5 **DETAIL**

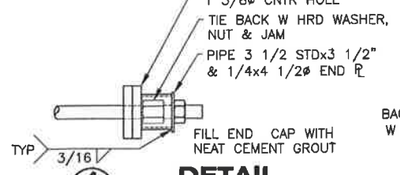

4 **DETAIL**

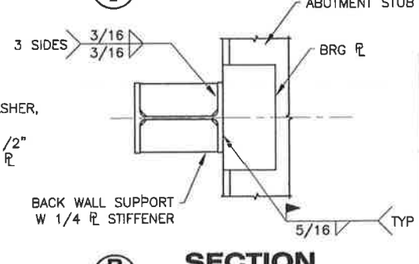

B **SECTION**

DRAWING SCALES ARE FOR FULL-SIZE SHEETS. IF NO SCALE SHOWN, USE DIMENSIONS.

DESIGNED BY: T. DOGGETT
CHECKED BY: STAFF
DRAWN BY: STAFF
10/29/14

STATE OF ALASKA
DEPARTMENT OF TRANSPORTATION & PUBLIC FACILITIES
SOUTHEAST REGION

CLARK BAY FERRY TERMINAL IMPROVEMENTS

PRECAST ABUTMENT DETAILS

PATH: Q:\POW\67449\PLANSET\REVISED DWGS\ABUTMENT MODS R_1\12A - B ABUTMENT_R1.DWG
TAB: 12B Wednesday, October 29, 2014 3:51:14 PM DOGGETT, TIMOTHY H (DOT)

REVISIONS NO.	DATE	DESCRIPTION	PROJECT DESIGNATION	YEAR	SHEET NO.	TOTAL SHEETS
			67449/0924019	2014	12B	~~57~~

RFP #02

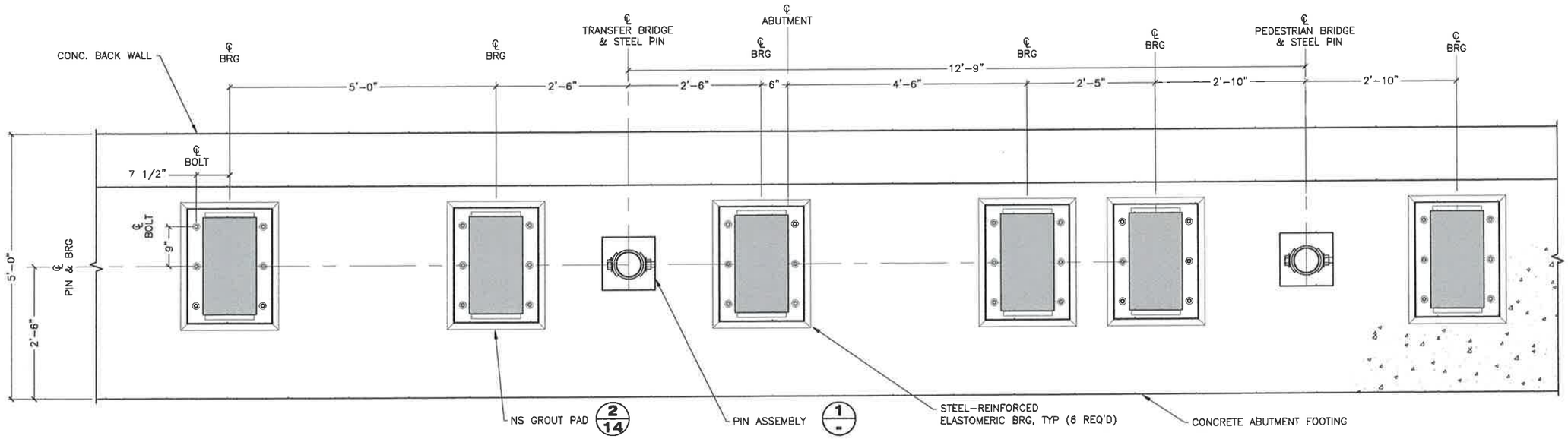

A/13 SECTION
BRIDGE & CROSS BEAM NOT SHOWN.

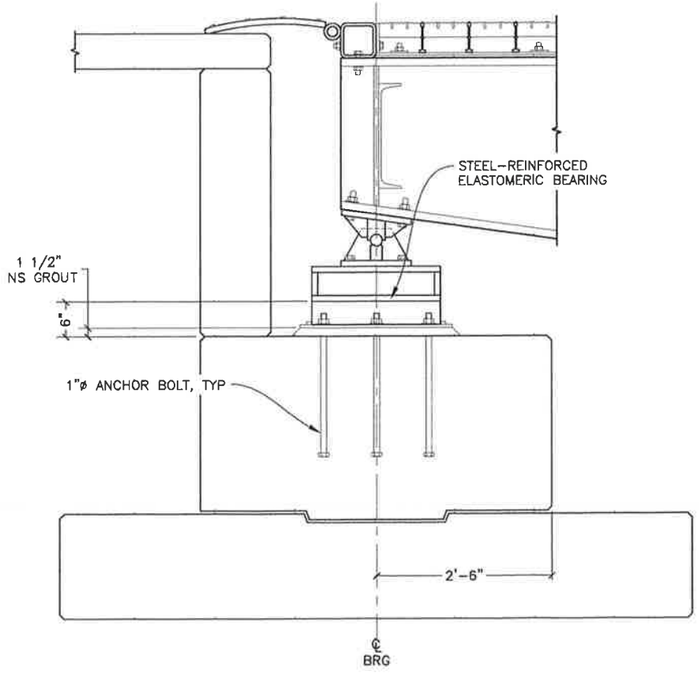

B/13 SECTION ⚠1

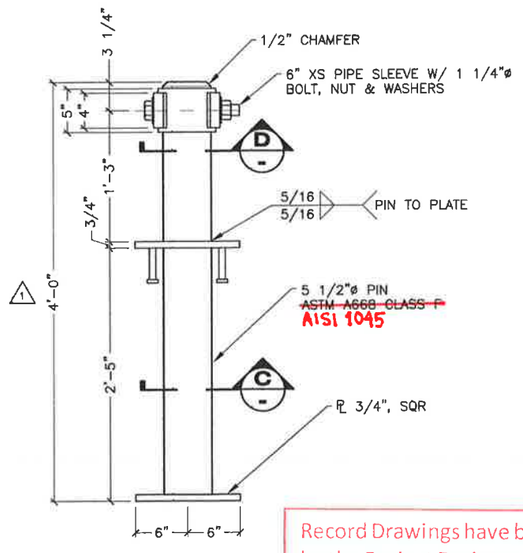

1/13 DETAIL

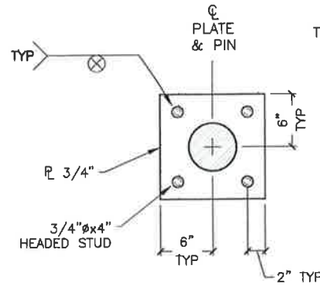

C/- SECTION

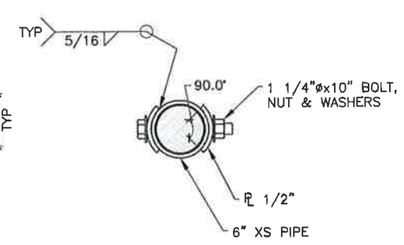

D/- SECTION

DRAWING SCALES ARE FOR FULL-SIZE SHEETS. IF NO SCALE SHOWN, USE DIMENSIONS.

Record Drawings have been reviewed by the Project Engineer, and represent to the best of my knowledge, the project as constructed.
PE [signature] Date 12/10/15

DESIGNED BY: T. DOGGETT
CHECKED BY: STAFF
DRAWN BY: STAFF
PATH: Q:\POW\67449\PLANSET\11-15 - BRIDGE ABUTMENT & BEARINGS_R1.DWG
TAB: 13 Wednesday, October 29, 2014 2:26:18 PM DOGGETT, TIMOTHY H (DOT)

STATE OF ALASKA
TIMOTHY H. DOGGETT CE-9027 REGISTERED PROFESSIONAL ENGINEER
10/29/14

STATE OF ALASKA
DEPARTMENT OF TRANSPORTATION & PUBLIC FACILITIES
SOUTHEAST REGION

CLARK BAY FERRY TERMINAL IMPROVEMENTS

130' TRANSFER BRIDGE SHOREWARD BEARINGS

REVISIONS NO.	DATE	DESCRIPTION
1	10.28.14	PIN LENGTH

PROJECT DESIGNATION	YEAR	SHEET NO.	TOTAL SHEETS
67449/0924019	2014	13	~~57~~

RFP #02

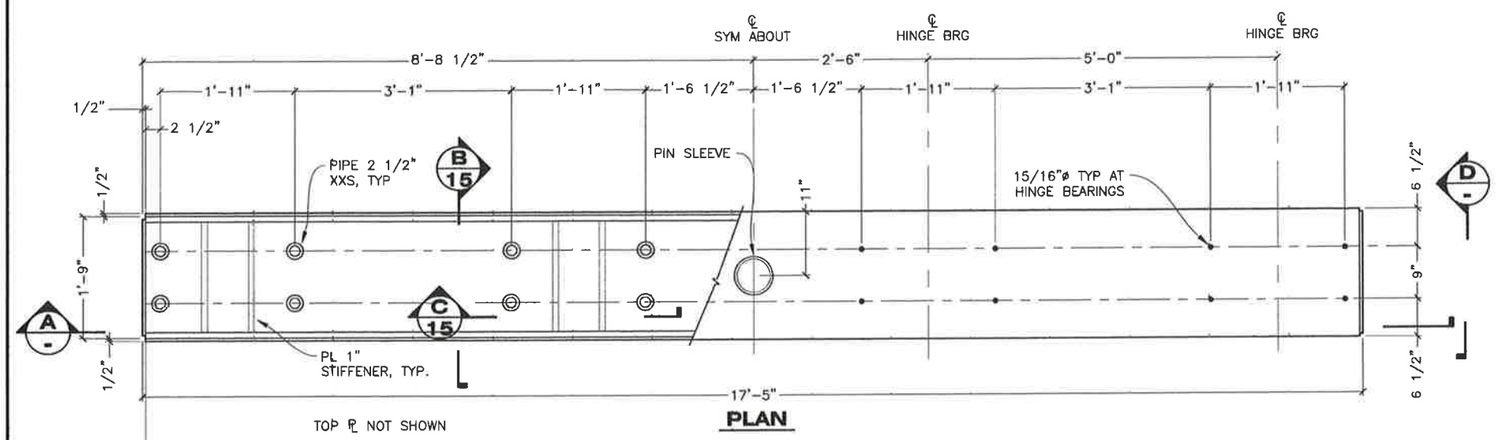

PLAN

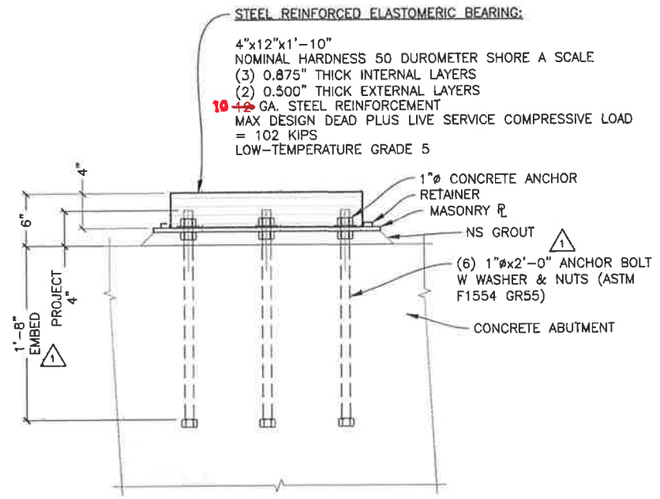

ELEVATION

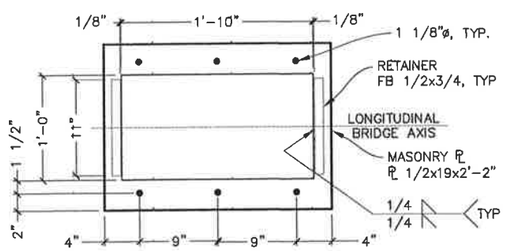

PLAN

2/14 STEEL-REINFORCED ELASTOMERIC BEARING

SET MASONRY PLATE AND BEARING PADS AS SPECIFIED IN STD SPEC. 504-3.02 ERECTION B. SETTING SHOES AND BEARINGS

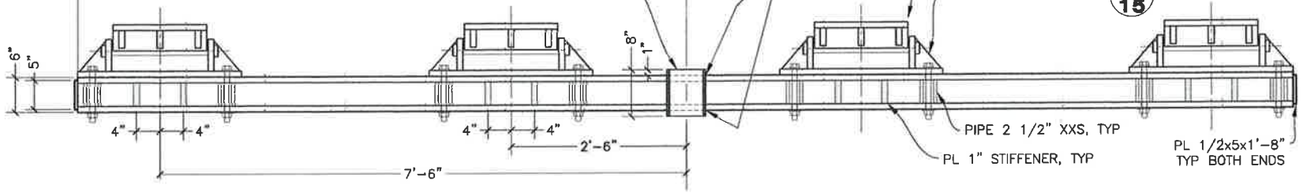

SECTION (A -)

1/14 CROSS BEAM ASSEMBLY

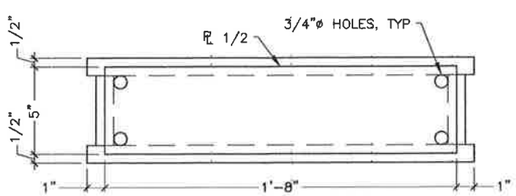

ELEVATION (D -)

Record Drawings have been reviewed by the Project Engineer, and represent to the best of my knowledge, the project as constructed.

PE _____ Date 12/10/15

DRAWING SCALES ARE FOR FULL-SIZE SHEETS. IF NO SCALE SHOWN, USE DIMENSIONS.

DESIGNED BY: T. DOGGETT
CHECKED BY: STAFF
DRAWN BY: STAFF
10/29/14

STATE OF ALASKA
DEPARTMENT OF TRANSPORTATION & PUBLIC FACILITIES
SOUTHEAST REGION

CLARK BAY FERRY TERMINAL IMPROVEMENTS

130' TRANSFER BRIDGE CROSS BEAM & ELASTOMERIC BEARING

PATH: Q:\POW\67449\PLANSET\11-15 - BRIDGE ABUTMENT & BEARINGS_R1.DWG
TAB: 14 Wednesday, October 29, 2014 2:24:26 PM DOGGETT, TIMOTHY H (DOT)

REVISIONS NO.	DATE	DESCRIPTION
1	10.28.14	A.B. LENGTH

PROJECT DESIGNATION	YEAR	SHEET NO.	TOTAL SHEETS
67449/0924019	2014	14	~~57~~

REP #02

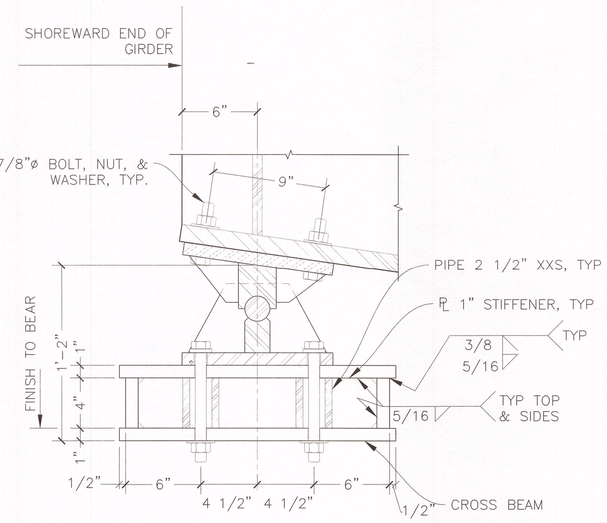

B/15 SECTION

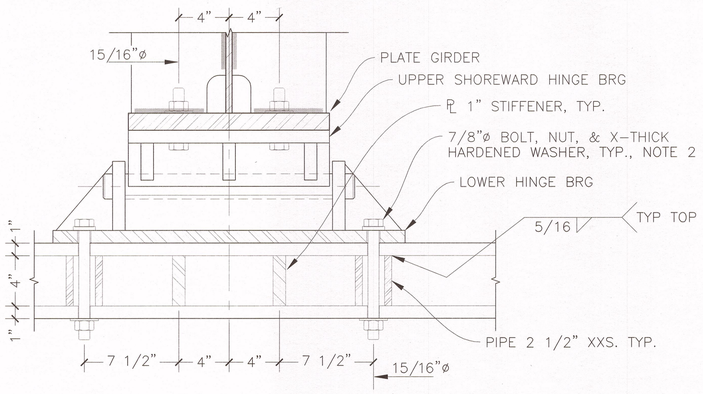

C/15 SECTION

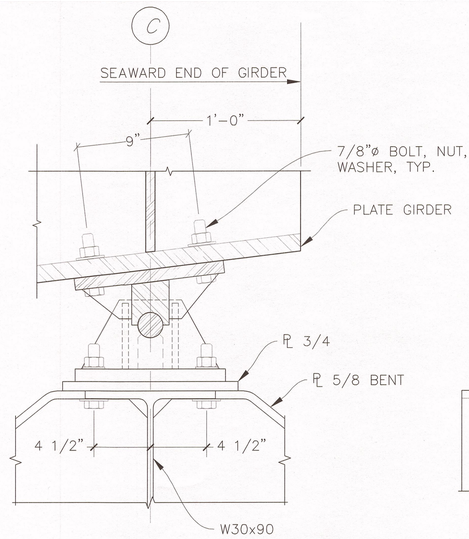

D/15 SECTION

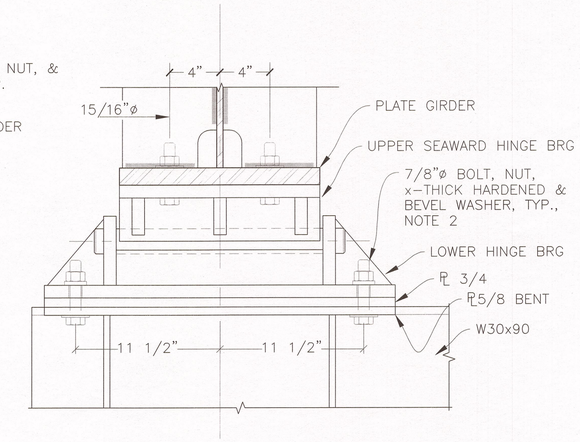

E/15 SECTION

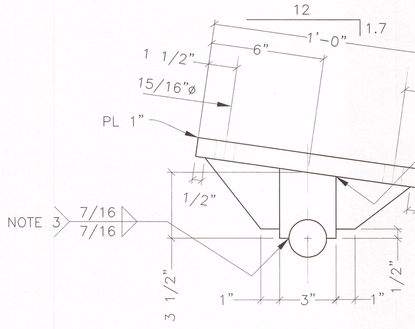

SIDE VIEW

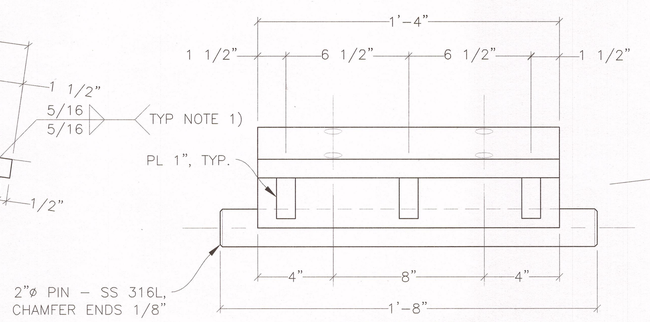

FRONT VIEW

1/15 UPPER SHOREWARD HINGE BEARING

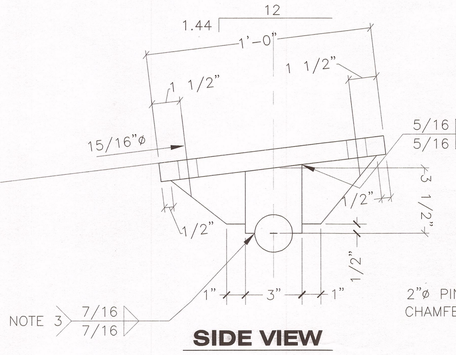

SIDE VIEW

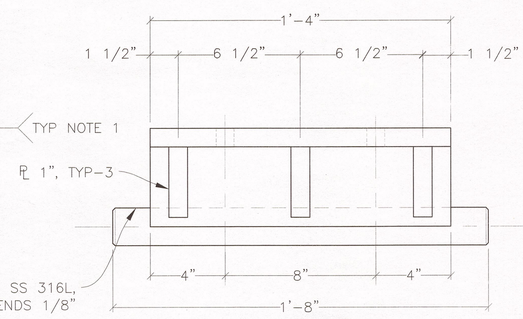

FRONT VIEW

1/15 UPPER SEAWARD HINGE BEARING

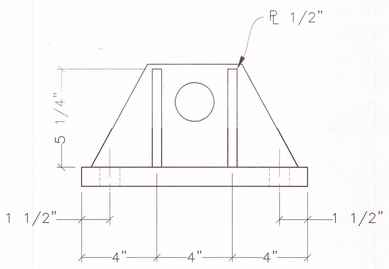

END VIEW

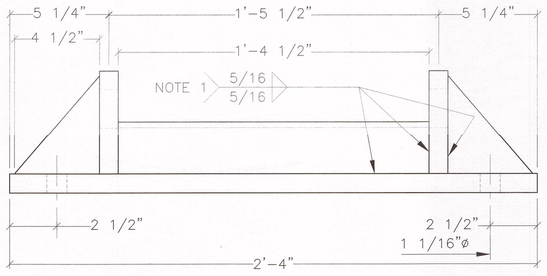

FRONT VIEW

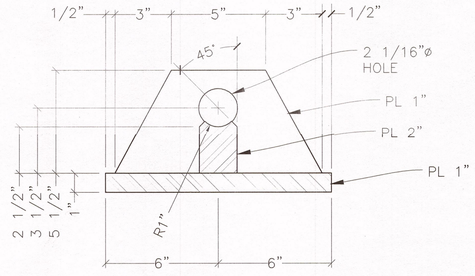

SECTION

2/15 LOWER HINGE BEARING

NOTE
1) SEAL ALL WELDS.
2) BOLTED CONNECTIONS ARE SLIP-CRITICAL, CLASS C (ROUGHENED HDG). PRETENSION BOLTS IN ACCORDANCE WITH RSCS, 8.2.4 DIRECT-TENSION-INDICATOR PRETENSIONING AND INSPECT PER 9.3 SLIP-CRITICAL JOINTS.
3) ASSEMBLY – GALVANIZE UPPER AND LOWER SECTIONS, INSTALL PIN THROUGH LOWER SECTION AND THEN WELD UPPER SECTION TO PIN.

Record Drawings have been reviewed by the Project Engineer, and represent to the best of my knowledge, the project as constructed.
PE _____ Date 12/10/15

DRAWING SCALES ARE FOR FULL-SIZE SHEETS. IF NO SCALE SHOWN, USE DIMENSIONS.

DESIGNED BY: T. DOGGETT
CHECKED BY: STAFF
DRAWN BY: STAFF

STATE OF ALASKA
TIMOTHY H. DOGGETT
CE-9027
49th
PROFESSIONAL ENGINEER
6/6/14

STATE OF ALASKA
DEPARTMENT OF TRANSPORTATION & PUBLIC FACILITIES
SOUTHEAST REGION

CLARK BAY FERRY TERMINAL IMPROVEMENTS

130' TRANSFER BRIDGE
BRIDGE BEARING DETAILS

PATH: Q:\POW\67449\PLANSET\MF\11-15 – BRIDGE ABUTMENT & BEARINGS.DWG
TAB: 15 Friday, June 06, 2014 9:15:47 AM LOWELL, DAVID H (DOT)

REVISIONS NO.	DATE	DESCRIPTION

PROJECT DESIGNATION	YEAR	SHEET NO.	TOTAL SHEETS
67449/0924019	2014	15	~~57~~

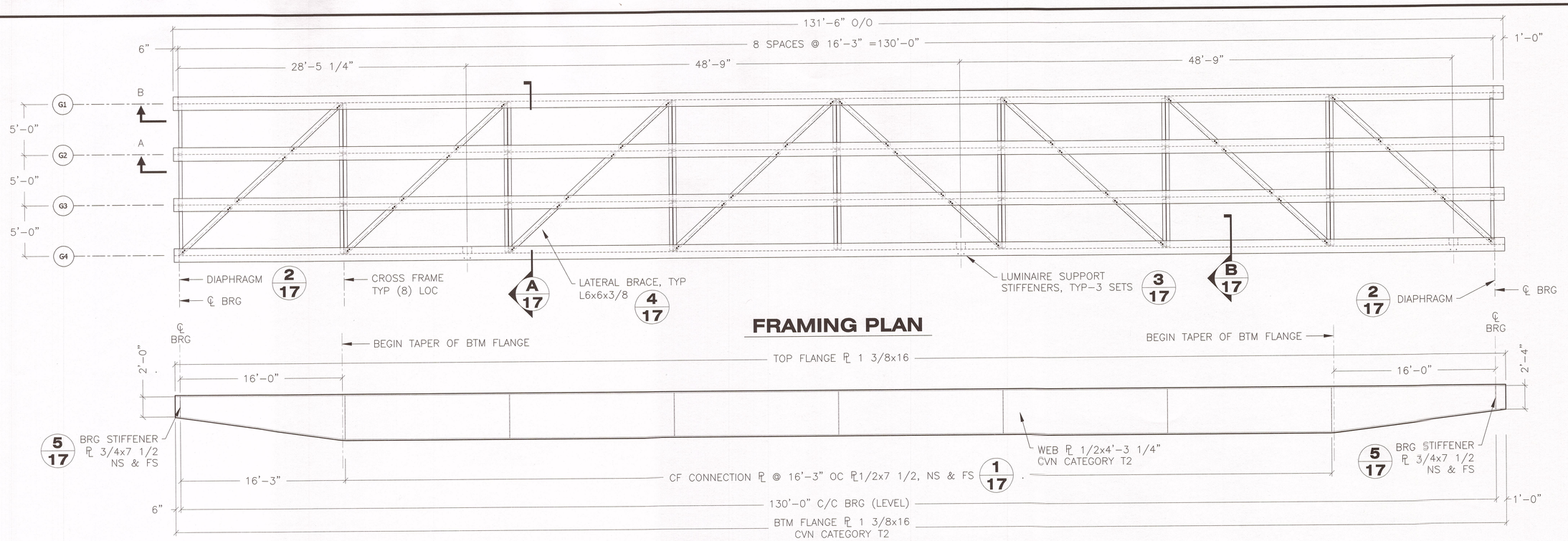

FRAMING PLAN

INTERIOR GIRDER ELEVATION A-A

TYP G2 & G3

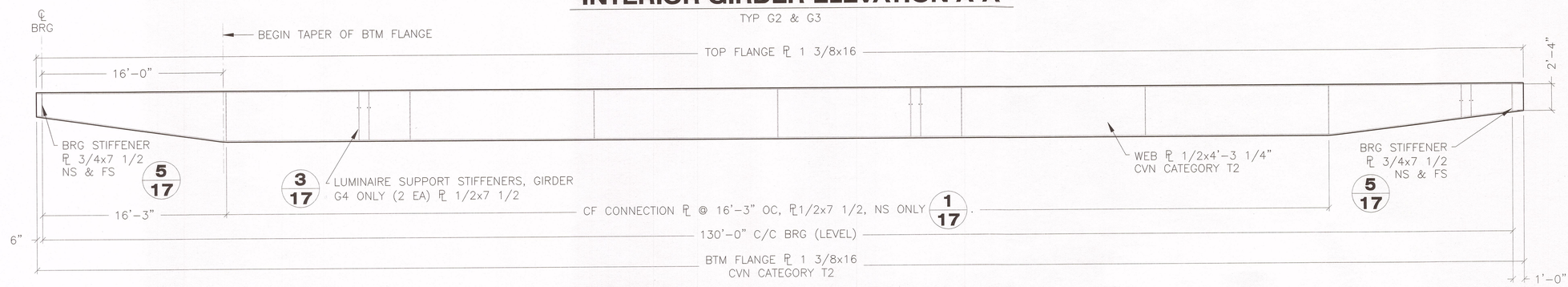

EXTERIOR GIRDER ELEVATION B-B

G1 SHOWN, G4 OPP HAND

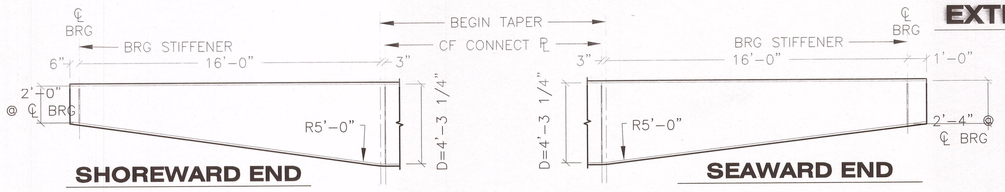

GIRDER TAPER DETAIL

1. SPLICES IN GIRDERS & GIRDER COMPONENTS SHALL BE MADE BY CJP GROOVE WELDS. SPLICES BETWEEN SECTIONS OF BUILT-UP GIRDERS SHALL PREFERABLY BE MADE IN A SINGLE TRANSVERSE PLANE. SHOP SPLICES OF WEBS AND FLANGES MADE BEFORE THE WEBS AND FLANGES ARE JOINED TO EACH OTHER MAY BE LOCATED IN A SINGLE TRANSVERSE PLANE OR MULTIPLE TRANSVERSE PLANES. NO SPLICES PERMITTED IN MIDDLE THIRD OF SPAN.
2. QC EXAMINATION OF CJP GROOVE WELDS IN BUTT JOINTS AND FILLET OR PJP GROOVE WELDS JOINING PRIMARY COMPONENTS OF MAIN MEMBERS SHALL BE IN ACCORDANCE WITH AWS D1.5 – 6.7.1 AND 6.7.2, RESPECTIVELY.
3. ALL DIMENSIONS ARE SHOWN WITH BRIDGE LEVEL.
4. ALL BRG STIFFENERS AND CONNECTION PLATES ARE NORMAL TO FLANGES.
5. GIRDERS G1, G2, G3, AND G4 ARE MAIN LOAD CARRYING MEMBERS.

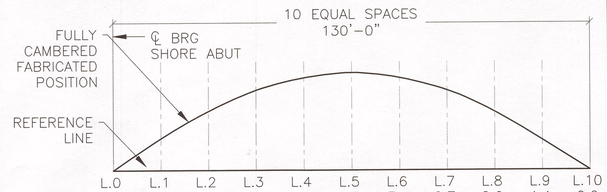

CAMBER DIAGRAM

Record Drawings have been reviewed by the Project Engineer, and represent to the best of my knowledge, the project as constructed.
PE V. Wall Date 12/0/15

DRAWING SCALES ARE FOR FULL-SIZE SHEETS. IF NO SCALE SHOWN, USE DIMENSIONS.

DESIGNED BY: T. DOGGETT
CHECKED BY: STAFF
DRAWN BY: STAFF

STATE OF ALASKA
TIMOTHY H. DOGGETT
CE-9027
REGISTERED PROFESSIONAL ENGINEER
6/6/14

STATE OF ALASKA
DEPARTMENT OF TRANSPORTATION & PUBLIC FACILITIES
SOUTHEAST REGION

CLARK BAY FERRY TERMINAL IMPROVEMENTS

130' TRANSFER BRIDGE GIRDER FRAMING

PATH: Q:\POW\67449\PLANSET\MF\09-10, 16-19 BRIDGE.DWG
TAB: 16 Friday, June 06, 2014 9:19:48 AM LOWELL, DAVID H (DOT)

REVISIONS NO.	DATE	DESCRIPTION

PROJECT DESIGNATION	YEAR	SHEET NO.	TOTAL SHEETS
67449/0924019	2014	16	~~57~~

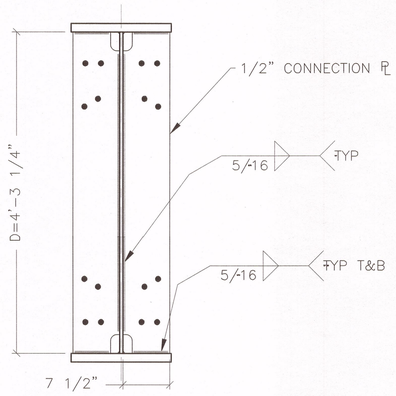

1/17 CONNECTION PL DETAIL

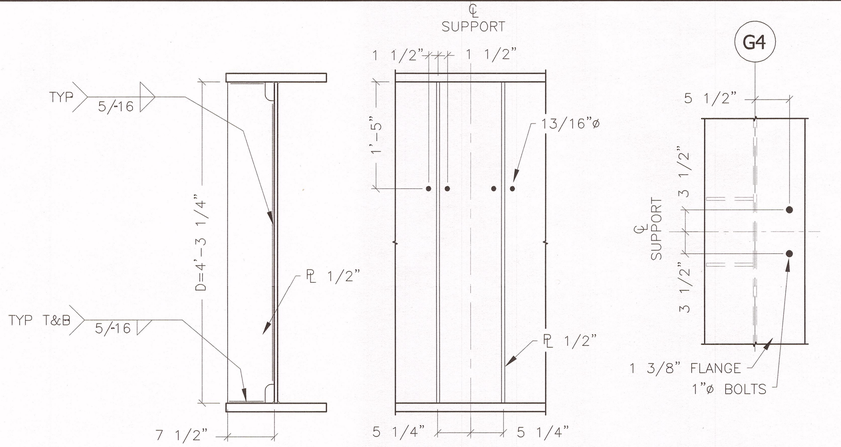

SECTION ELEVATION PLAN

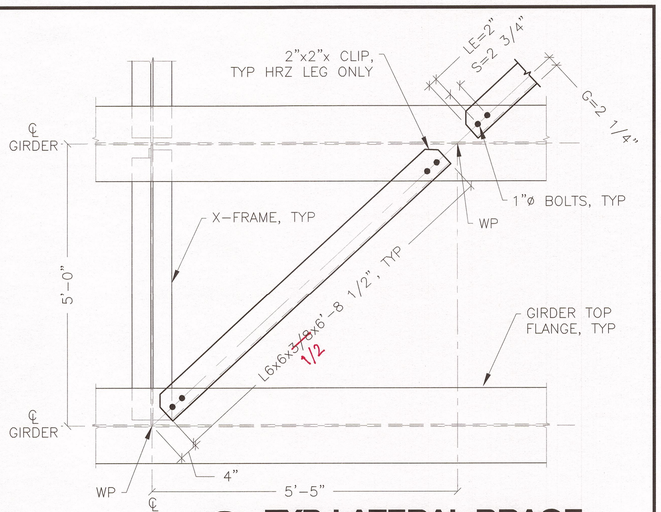

4/17 TYP LATERAL BRACE

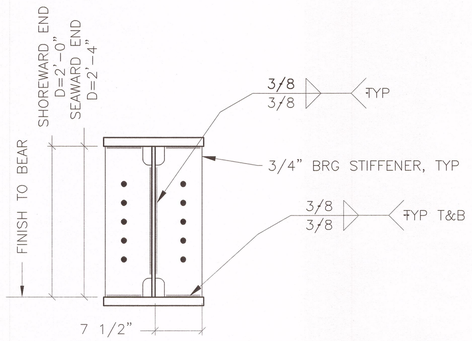

5/17 BEARING STIFFENERS

3/17 LIGHT POLE SUPPORT DETAIL

TYP 3 LOCATIONS AT GIRDER G4 ONLY

SEE 1/19 FOR SUPPORT BRACKET DETAIL

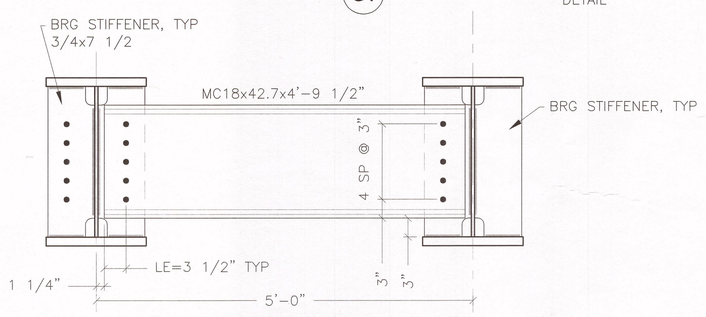

2/17 END DIAPHRAGMS LOOKING FROM INTERIOR

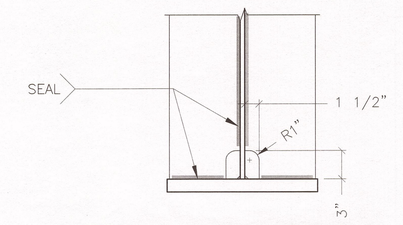

TYP COPE DETAIL

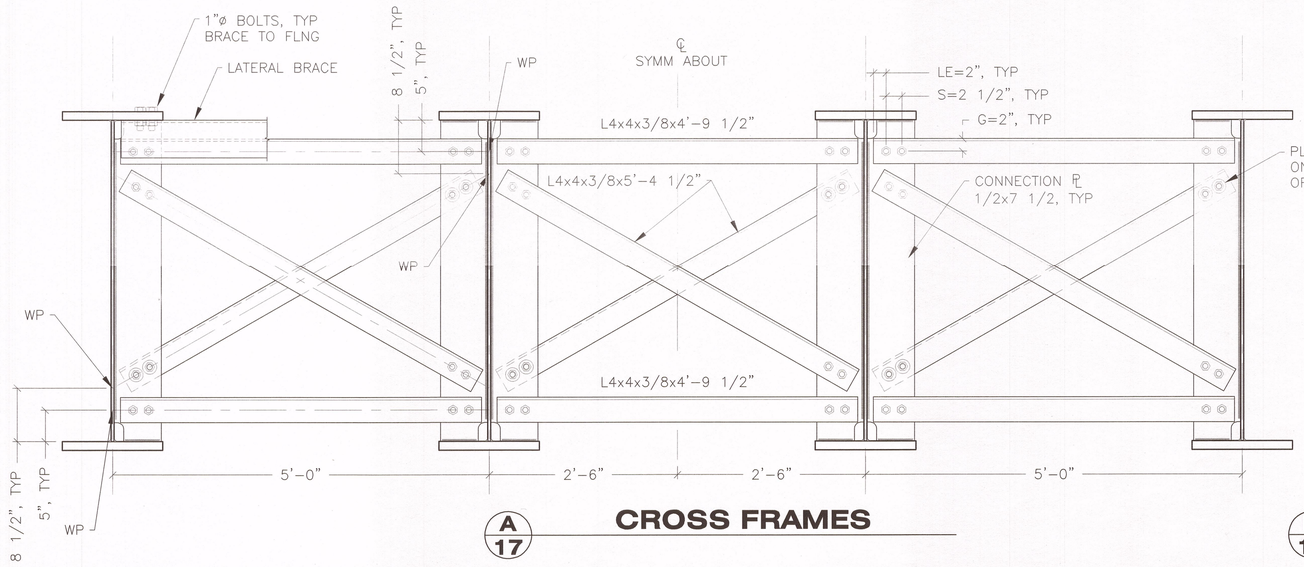

A/17 CROSS FRAMES

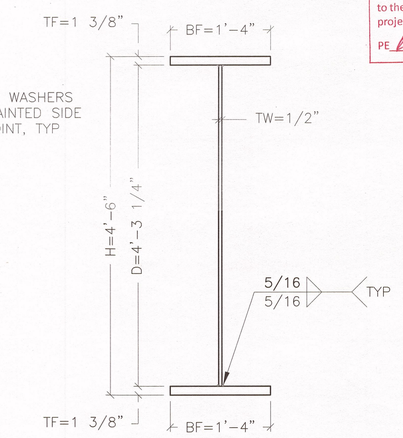

B/17 TYP GIRDER SECTION

Record Drawings have been reviewed by the Project Engineer, and represent to the best of my knowledge, the project as constructed.
PE [signature] Date 12/10/15

ALL BOLTS ARE 7/8" DIAMETER IN 15/16" DIAMETER HOLES, UNLESS OTHERWISE NOTED.

DRAWING SCALES ARE FOR FULL-SIZE SHEETS. IF NO SCALE SHOWN, USE DIMENSIONS.

DESIGNED BY: T. DOGGETT
STATE OF ALASKA TIMOTHY H. DOGGETT CE-9027 49th REGISTERED PROFESSIONAL ENGINEER 6/16/14
CHECKED BY: STAFF
DRAWN BY: STAFF

STATE OF ALASKA
DEPARTMENT OF TRANSPORTATION & PUBLIC FACILITIES
SOUTHEAST REGION

CLARK BAY FERRY TERMINAL IMPROVEMENTS

130' TRANSFER BRIDGE GIRDER DETAILS

PATH: Q:\POW\67449\PLANSET\MF\09-10, 16-19 BRIDGE.DWG
TAB: 17 Monday, June 16, 2014 12:28:36 PM LOWELL, DAVID H (DOT)

REVISIONS NO.	DATE	DESCRIPTION

PROJECT DESIGNATION	YEAR	SHEET NO.	TOTAL SHEETS
67449/0924019	2014	17	~~57~~

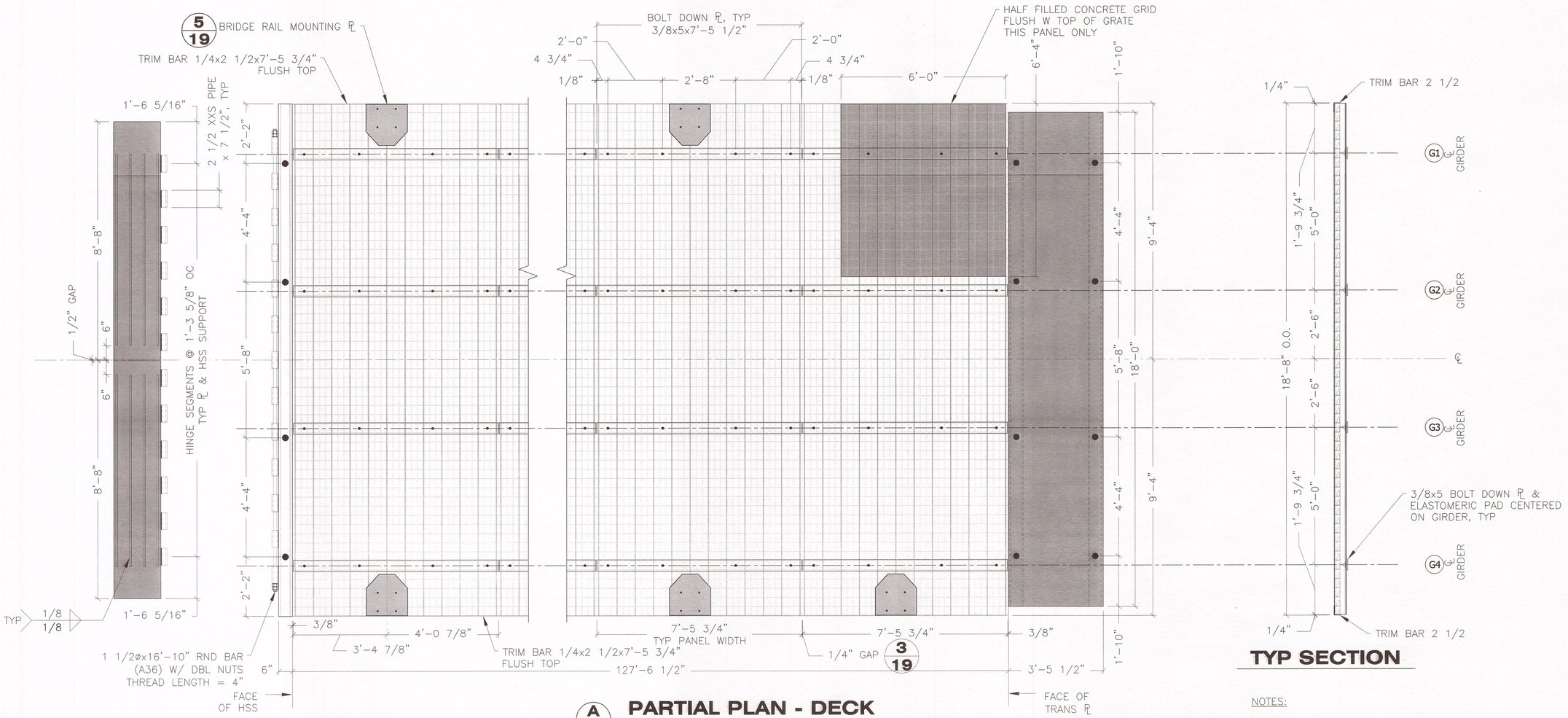

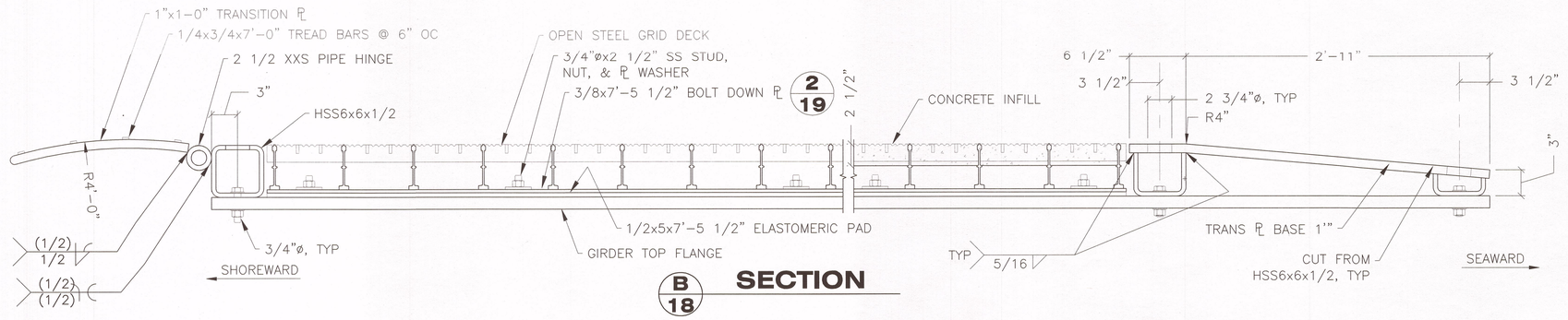

NOTES:

1. PROTECTIVE COATINGS (SECTION 513):
   SHOREWARD TRANSITION PL – SYSTEM 7A
   SEAWARD TRANSITION PL BASE – SYSTEM 7B
   CONCRETE INFILL WALKWAY – SYSTEM 9

Record Drawings have been reviewed by the Project Engineer, and represent to the best of my knowledge, the project as constructed.
PE _____ Date 12/10/15

DRAWING SCALES ARE FOR FULL-SIZE SHEETS. IF NO SCALE SHOWN, USE DIMENSIONS.

DESIGNED BY: T. DOGGETT
STATE OF ALASKA · TIMOTHY H. DOGGETT · CE-9027 · 49th · REGISTERED PROFESSIONAL ENGINEER
6/9/14
CHECKED BY: STAFF
DRAWN BY: STAFF

STATE OF ALASKA
DEPARTMENT OF TRANSPORTATION & PUBLIC FACILITIES
SOUTHEAST REGION

CLARK BAY FERRY TERMINAL IMPROVEMENTS

130' TRANSFER BRIDGE
BRIDGE DECK

PATH: Q:\POW\67449\PLANSET\MF\09-10, 16-19 BRIDGE.DWG
TAB: 18 Monday, June 09, 2014 10:55:18 AM LOWELL, DAVID H (DOT)

REVISIONS NO.	DATE	DESCRIPTION

PROJECT DESIGNATION	YEAR	SHEET NO.	TOTAL SHEETS
67449/0924019	2014	18	~~57~~

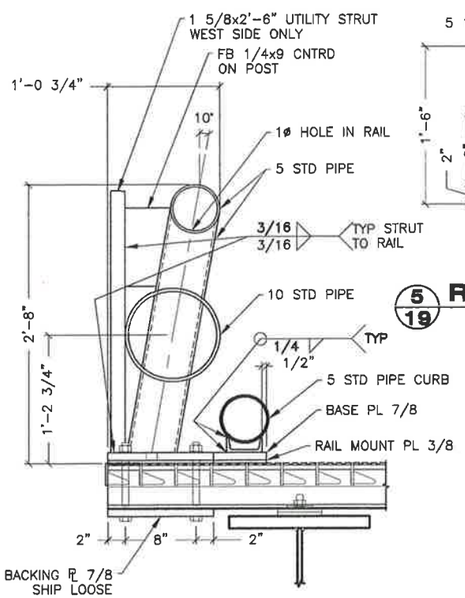

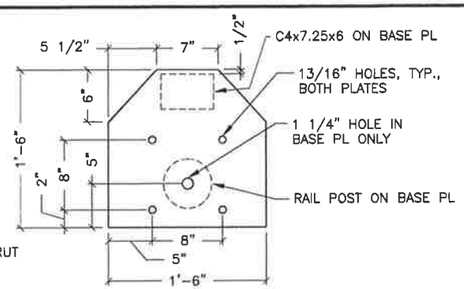

5/19 RAIL BASE AND MOUNT PLATES

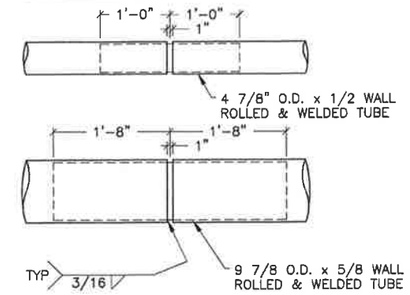

4/19 BRIDGE RAIL SPLICE

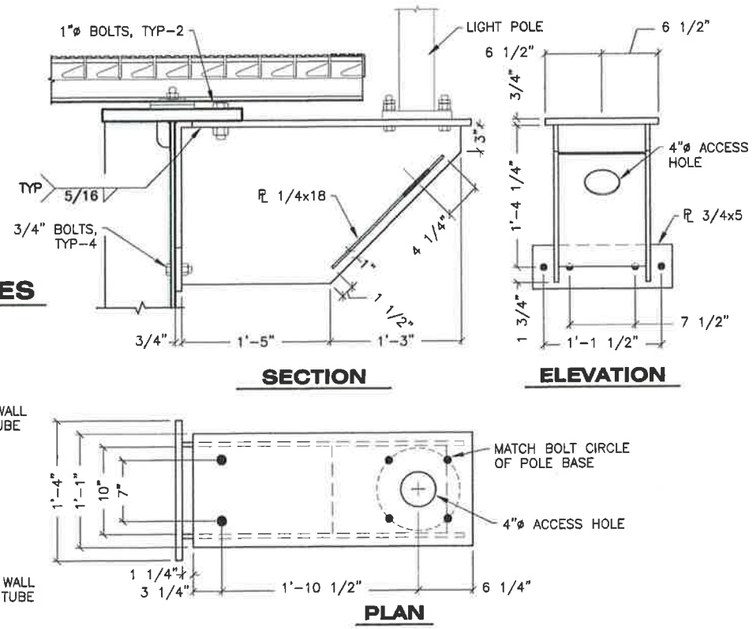

1/19 LIGHT POLE SUPPORT BRACKET

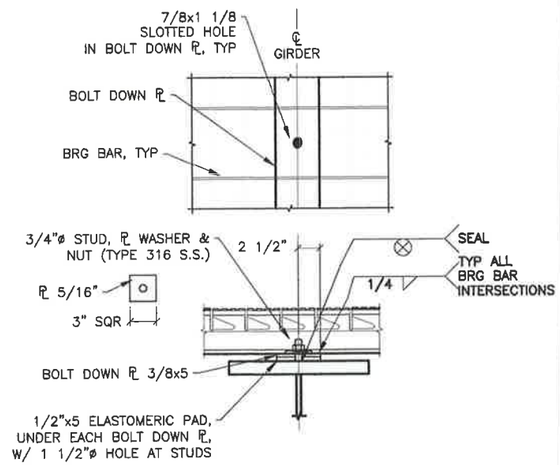

2/19 BOLT DOWN PLATE

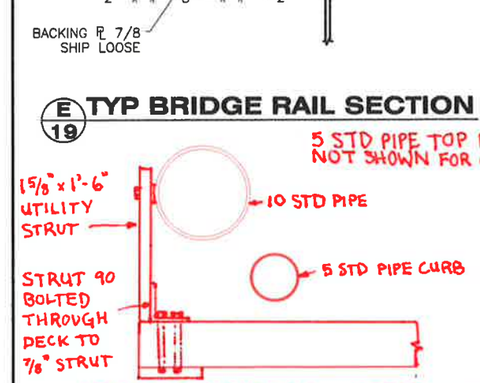

E/19 TYP BRIDGE RAIL SECTION

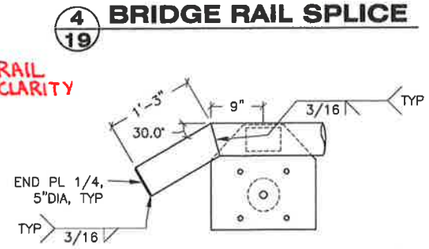

CURB END, TYP

Record Drawings have been reviewed by the Project Engineer, and represent to the best of my knowledge, the project as constructed.

PE _____ Date 12/10/15

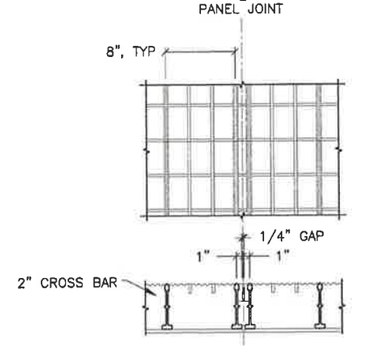

3/19 TYP PANEL JOINT

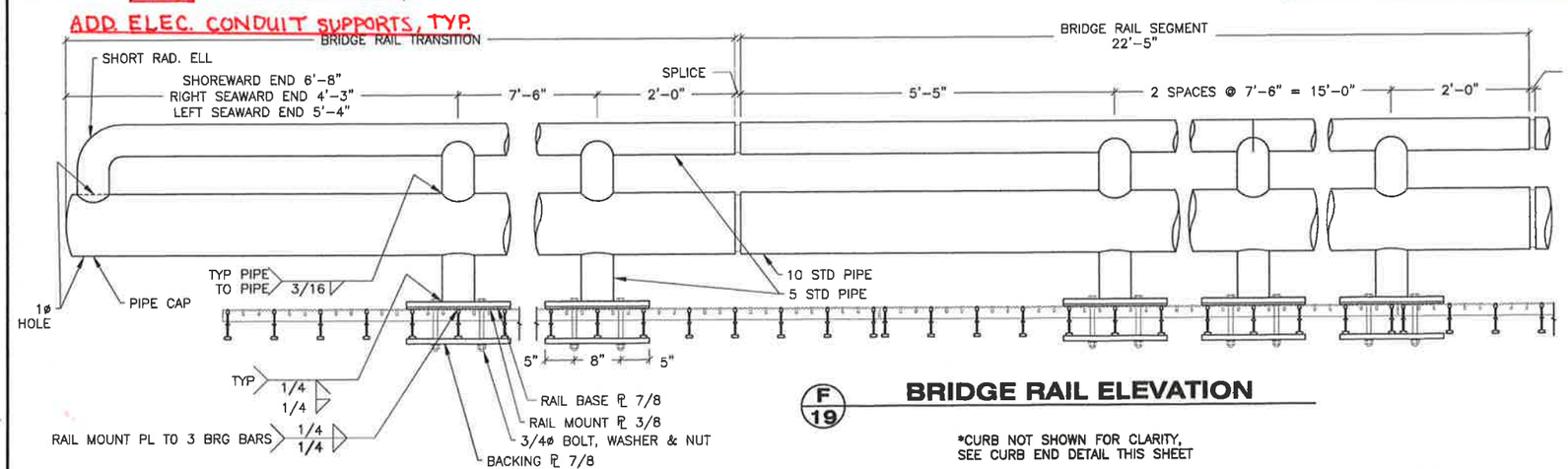

F/19 BRIDGE RAIL ELEVATION

*CURB NOT SHOWN FOR CLARITY, SEE CURB END DETAIL THIS SHEET

DRAWING SCALES ARE FOR FULL-SIZE SHEETS. IF NO SCALE SHOWN, USE DIMENSIONS.

DESIGNED BY: T. DOGGETT
CHECKED BY: STAFF
DRAWN BY: STAFF
6/6/14

STATE OF ALASKA
DEPARTMENT OF TRANSPORTATION & PUBLIC FACILITIES
SOUTHEAST REGION

CLARK BAY FERRY TERMINAL IMPROVEMENTS

130' TRANSFER BRIDGE
BRIDGE RAIL

PATH: Q:\POW\67449\PLANSET\MF\09-10, 16-19 BRIDGE.DWG
TAB: 19 Friday, June 06, 2014 9:24:47 AM LOWELL, DAVID H (DOT)

REVISIONS NO.	DATE	DESCRIPTION	PROJECT DESIGNATION	YEAR	SHEET NO.	TOTAL SHEETS
			67449/0924019	2014	19	~~57~~

SEE SHEETS 58-61 FOR NEW INTERMEDIATE RAMP

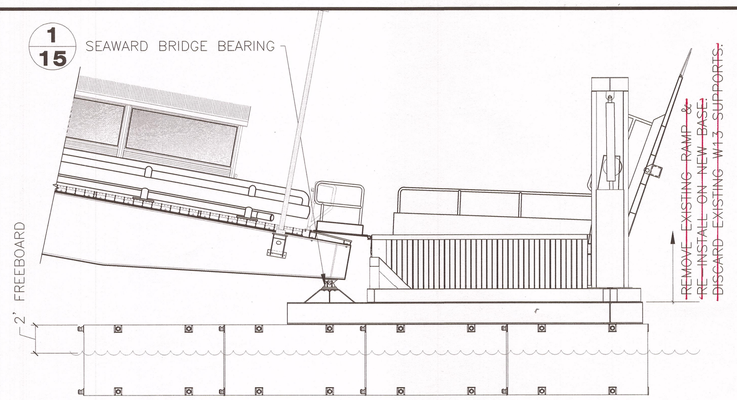

NOTE: PLATFORMS NOT SHOWN FOR CLARITY

ELEVATION

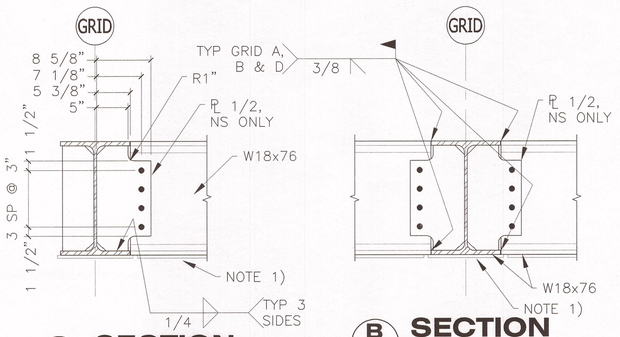

A- SECTION

B- SECTION

SINGLE-PLATE CONNECTION SIM TO SECTION A

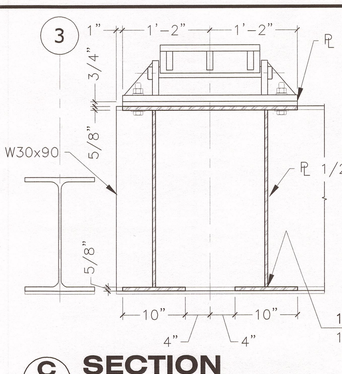

C- SECTION

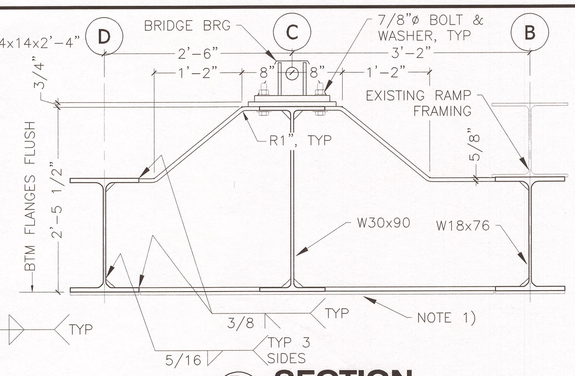

D- SECTION

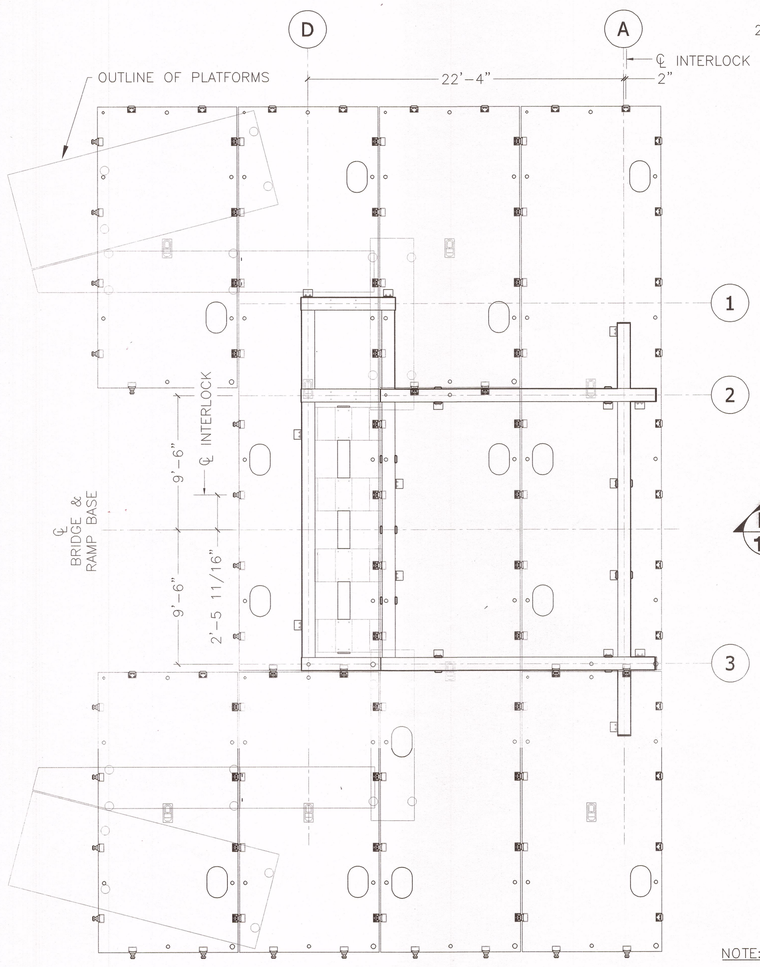

PLAN

1/20 INTERMEDIATE RAMP BASE

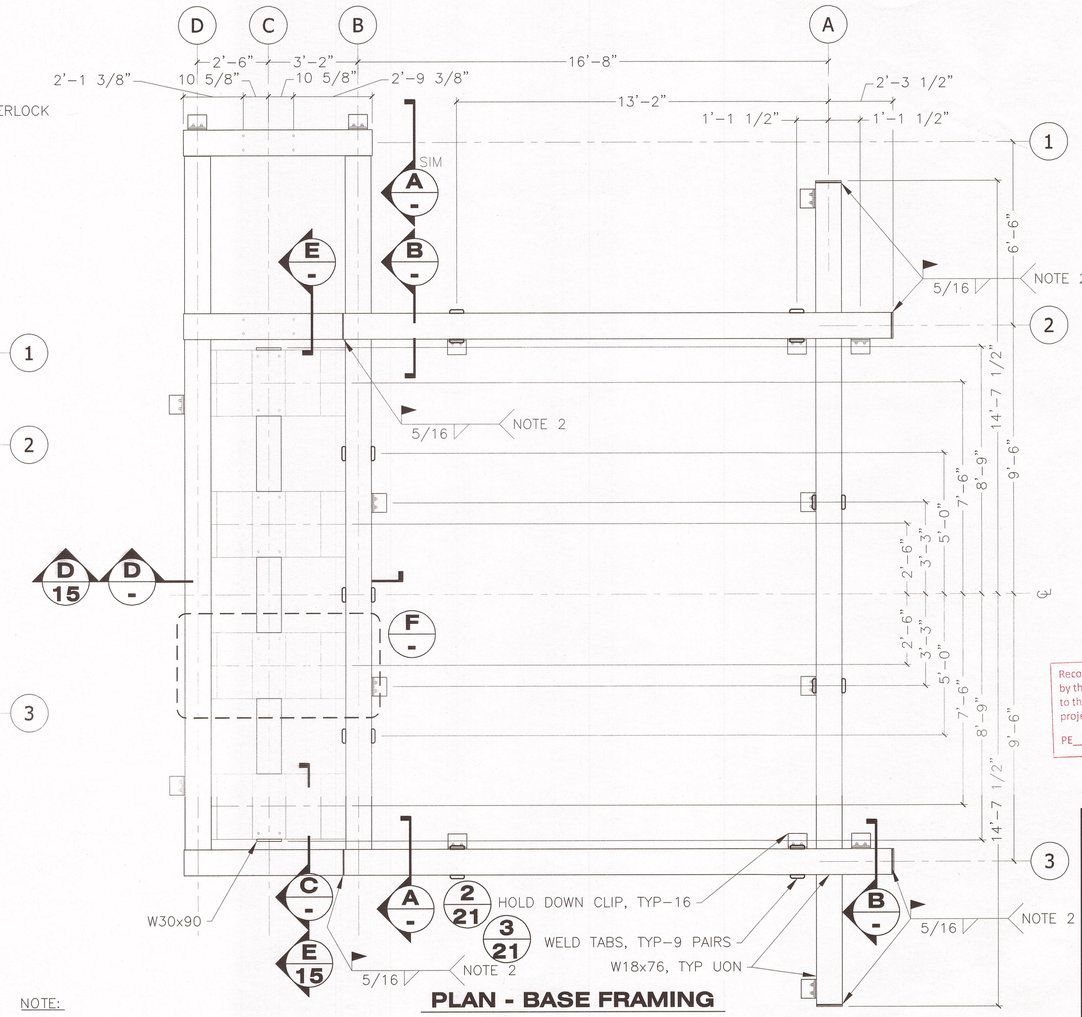

PLAN - BASE FRAMING

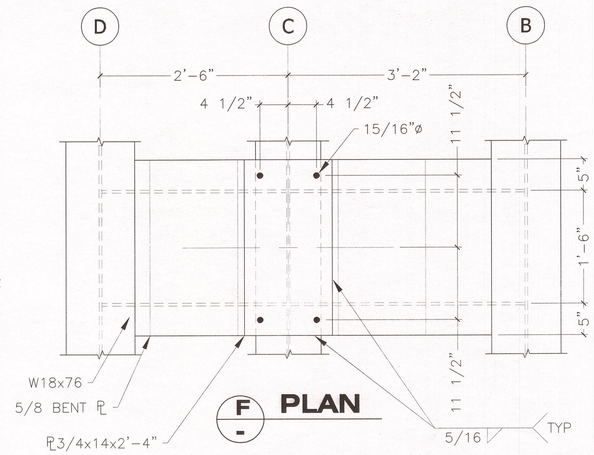

F- PLAN

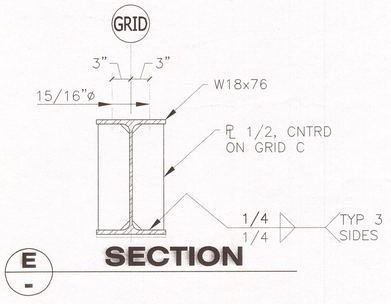

E- SECTION

Record Drawings have been reviewed by the Project Engineer, and represent to the best of my knowledge, the project as constructed.
PE [signature] Date 12/01/15

NOTE:

1. 1/2" THICK 50 DUROMETER PLAIN ELASTOMERIC PAD FULL WIDTH AND LENGTH OF BOTTOM FLANGES. SECURE PAD TO UNDERSIDE OF FLANGE WITH EPOXY ADHESIVE. OMIT PAD 4" EITHER SIDE OF FLOAT LOCKS & LIFT EYES.
2. AFTER PLACING EXISTING INTERMEDIATE RAMP, WELD ENDS OF EXISTING BASE FRAME TO TOP FLANGE OF NEW BASE FRAME, TYP-6 PLACES.
3. BOLTS IN BASE FRAMING ARE 3/4"ø, UNLESS OTHERWISE NOTED.

DRAWING SCALES ARE FOR FULL-SIZE SHEETS. IF NO SCALE SHOWN, USE DIMENSIONS.

DESIGNED BY: T. DOGGETT
CHECKED BY: STAFF
DRAWN BY: STAFF

STATE OF ALASKA
TIMOTHY H. DOGGETT
CE-9027
REGISTERED PROFESSIONAL ENGINEER
6/16/14

STATE OF ALASKA
DEPARTMENT OF TRANSPORTATION & PUBLIC FACILITIES
SOUTHEAST REGION

CLARK BAY FERRY TERMINAL IMPROVEMENTS

130' TRANSFER BRIDGE INTERMEDIATE RAMP FRAMING

PATH: Q:\POW\67449\PLANSET\MF\20-21 - RAMP MODS.DWG
TAB: 20 Monday, June 16, 2014 12:29:48 PM LOWELL, DAVID H (DOT)

REVISIONS NO.	DATE	DESCRIPTION

PROJECT DESIGNATION	YEAR	SHEET NO.	TOTAL SHEETS
67449/0924019	2014	20	~~57~~

SEE SHEETS 58-61 FOR NEW INTERMEDIATE RAMP

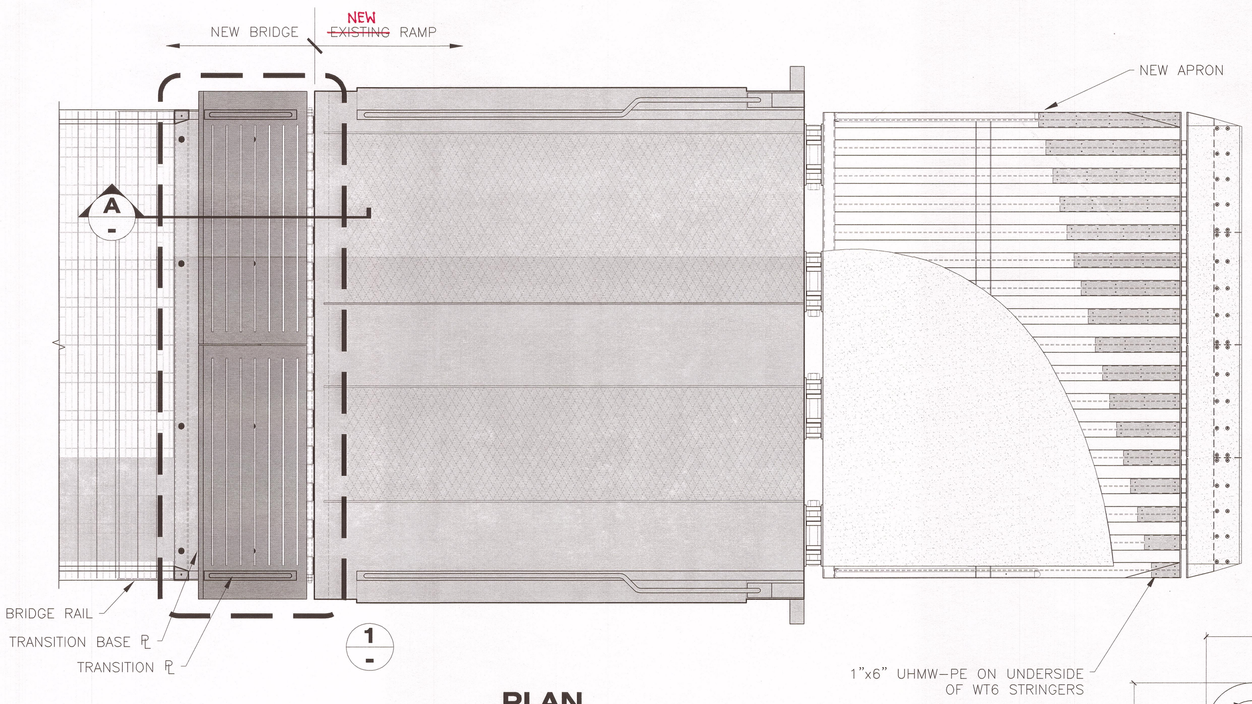

PLAN

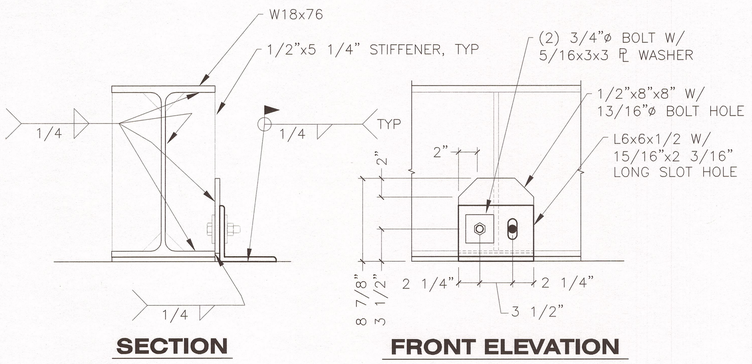

SECTION **FRONT ELEVATION**

2/21 HOLD DOWN CLIP - DETAIL

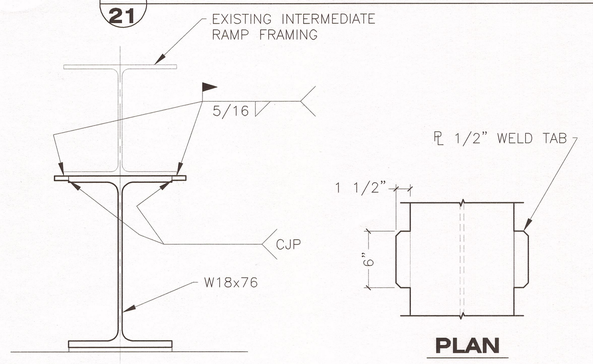

SECTION **PLAN**

3/21 WELD TABS - DETAIL

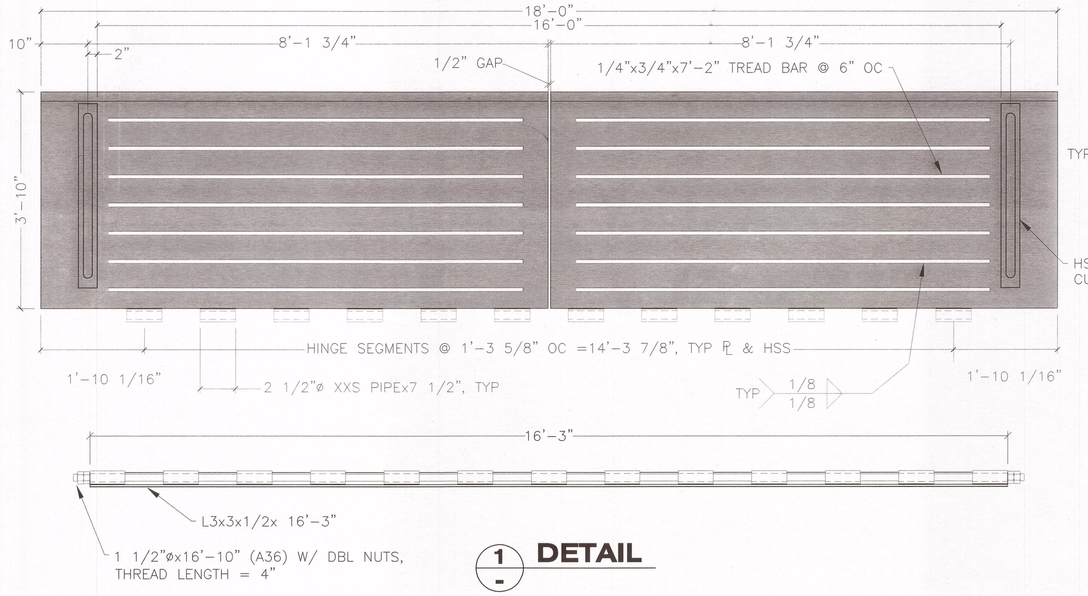

1/- DETAIL

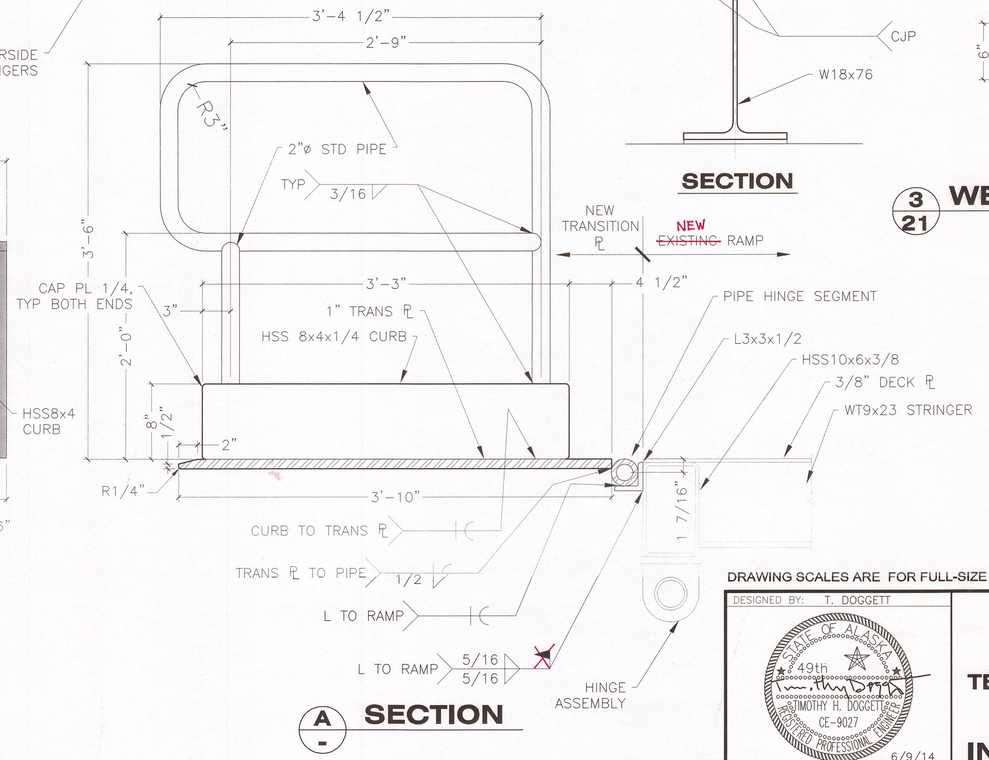

A/- SECTION

NOTES:
1. PROTECTIVE COATING (SECTION 513): GALVANIZE & APPLY NON SKID TO TOP SURFACE – SYSTEM 7A.

1/21 TRANSITION PLATE

Record Drawings have been reviewed by the Project Engineer, and represent to the best of my knowledge, the project as constructed.
PE [signature] Date 12/10/15

DRAWING SCALES ARE FOR FULL-SIZE SHEETS. IF NO SCALE SHOWN, USE DIMENSIONS.

DESIGNED BY: T. DOGGETT
STATE OF ALASKA · TIMOTHY H. DOGGETT · CE-9027 · 49th · REGISTERED PROFESSIONAL ENGINEER
6/9/14
CHECKED BY: STAFF
DRAWN BY: STAFF
PATH: Q:\POW\67449\PLANSET\MF\20-21 – RAMP MODS.DWG
TAB: 21 Monday, June 09, 2014 11:18:32 AM LOWELL, DAVID H (DOT)

STATE OF ALASKA
DEPARTMENT OF TRANSPORTATION & PUBLIC FACILITIES
SOUTHEAST REGION

CLARK BAY FERRY TERMINAL IMPROVEMENTS

130' TRANSFER BRIDGE INTERMEDIATE RAMP MODIFICATIONS

REVISIONS		
NO.	DATE	DESCRIPTION

PROJECT DESIGNATION	YEAR	SHEET NO.	TOTAL SHEETS
67449/0924019	2014	21	~~57~~

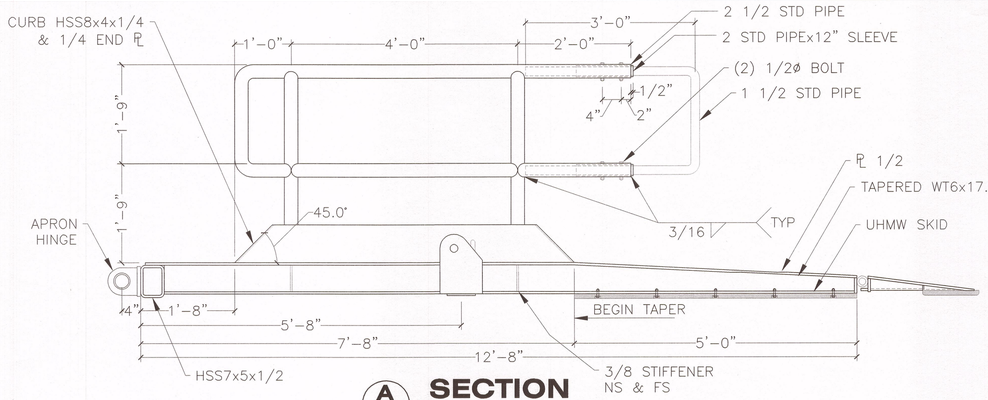

A SECTION

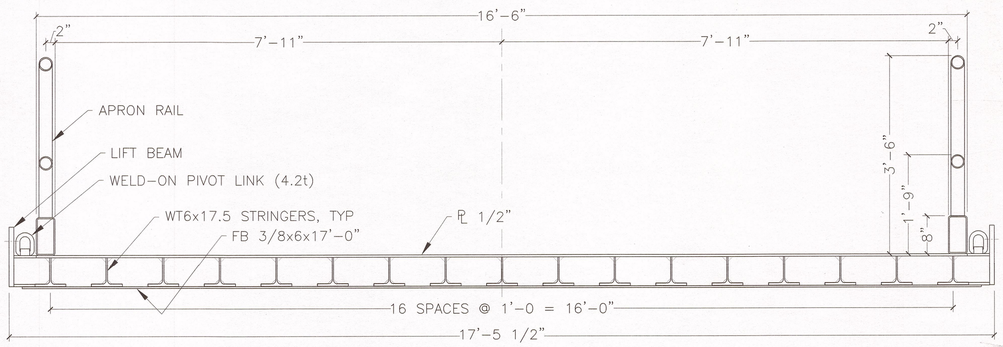

B SECTION

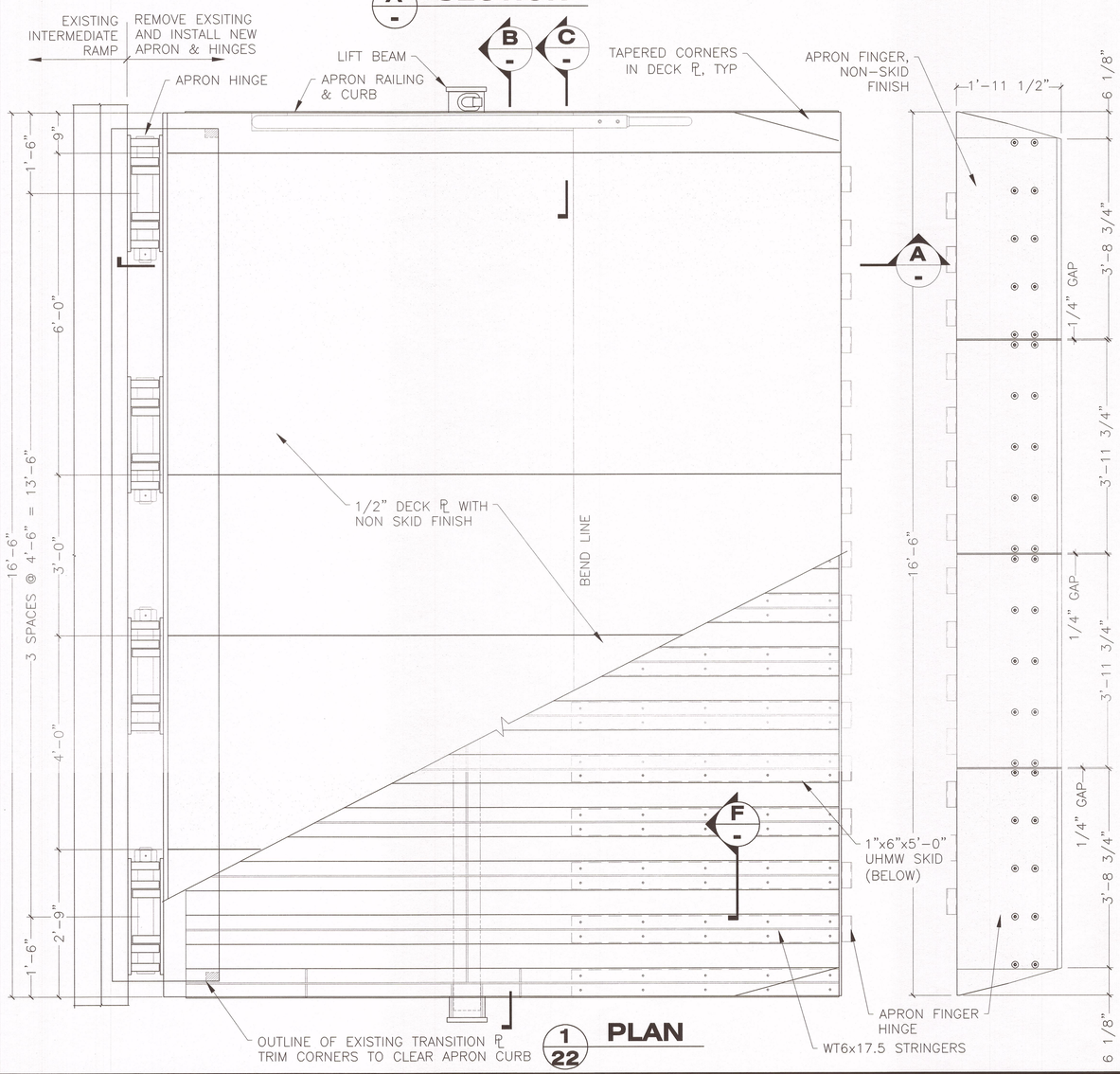

1/22 PLAN

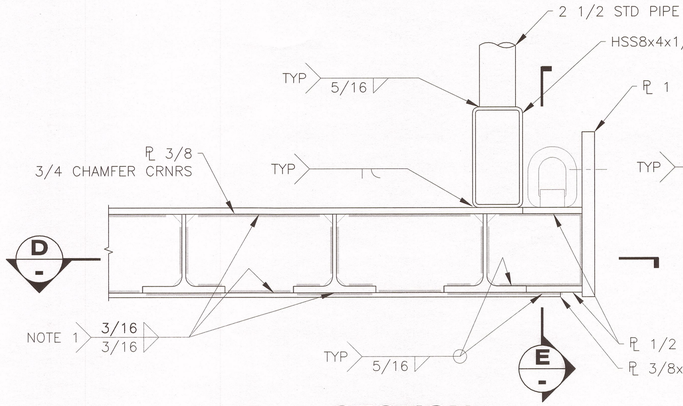

C SECTION

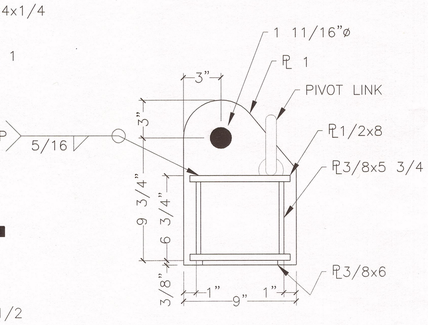

E SECTION

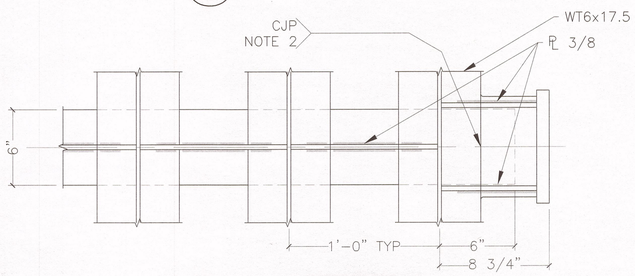

D SECTION

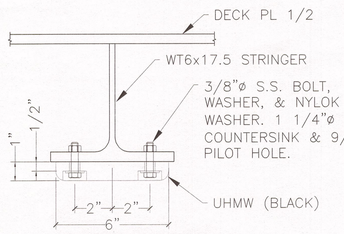

F SECTION

DRAWING SCALES ARE FOR FULL-SIZE SHEETS. IF NO SCALE SHOWN, USE DIMENSIONS.

NOTES:
1. END WELDS 1/4" FROM PLATE EDGE.
2. USE WELD TABS AND RADIUS WELD AT TERMINATIONS.
3. APPROXIMATE WEIGHT OF APRON & FINGERS = 12,750 LBS.
4. REMOVE & DISPOSE OF EXISTING APRON & HINGES FROM FACE OF INTERMEDIATE RAMP HINGE TUBE. INSTALL NEW APRON & HINGES TO EXISTING RAMP.
5. PROTECTIVE COATING (SECTION 513): HOT DIP GALVANIZE AND SYSTEM 7A NONSKID WHERE SHOWN.

Record Drawings have been reviewed by the Project Engineer, and represent to the best of my knowledge, the project as constructed.
PE _____ Date 12/0/15

DESIGNED BY: T. DOGGETT
STATE OF ALASKA
TIMOTHY H. DOGGETT
CE-9027
REGISTERED PROFESSIONAL ENGINEER
6/10/14
CHECKED BY: STAFF
DRAWN BY: STAFF

STATE OF ALASKA
DEPARTMENT OF TRANSPORTATION
& PUBLIC FACILITIES
SOUTHEAST REGION

CLARK BAY FERRY TERMINAL IMPROVEMENTS

APRON

PATH: Q:\POW\67449\PLANSET\MF\22-23 - APRON.DWG
TAB: 22 Tuesday, June 10, 2014 12:36:27 PM LOWELL, DAVID H (DOT)

REVISIONS			PROJECT DESIGNATION	YEAR	SHEET NO.	TOTAL SHEETS
NO.	DATE	DESCRIPTION	67449/0924019	2014	22	~~57~~

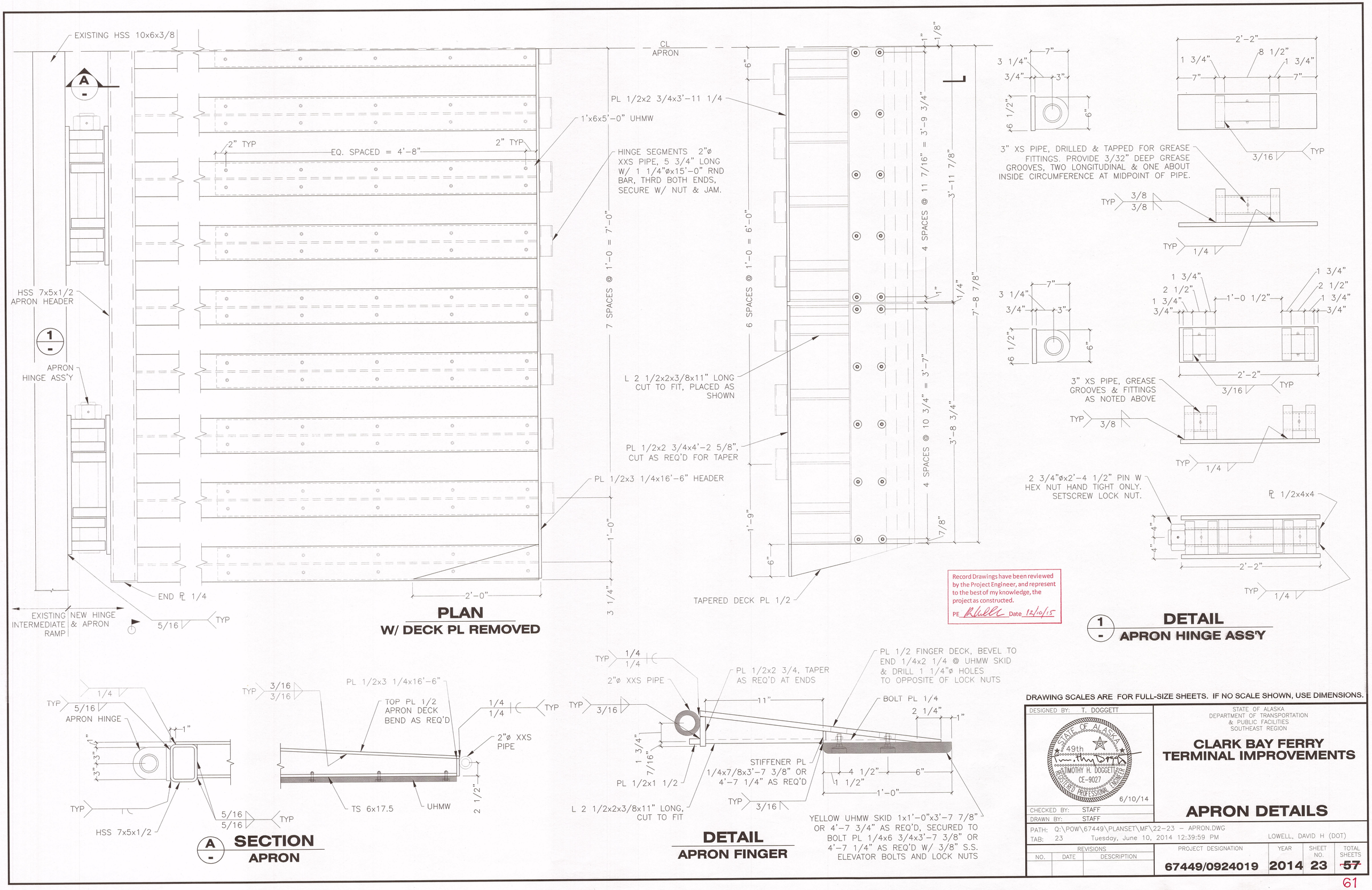

Record Drawings have been reviewed by the Project Engineer, and represent to the best of my knowledge, the project as constructed.
PE [signature] Date 12/10/15

DRAWING SCALES ARE FOR FULL-SIZE SHEETS. IF NO SCALE SHOWN, USE DIMENSIONS.

DESIGNED BY: T. DOGGETT
STATE OF ALASKA 49th TIMOTHY H. DOGGETT CE-9027 REGISTERED PROFESSIONAL ENGINEER
6/10/14
CHECKED BY: STAFF
DRAWN BY: STAFF

STATE OF ALASKA
DEPARTMENT OF TRANSPORTATION & PUBLIC FACILITIES
SOUTHEAST REGION

CLARK BAY FERRY TERMINAL IMPROVEMENTS

APRON DETAILS

PATH: Q:\POW\67449\PLANSET\MF\22-23 - APRON.DWG
TAB: 23 Tuesday, June 10, 2014 12:39:59 PM LOWELL, DAVID H (DOT)

REVISIONS			PROJECT DESIGNATION	YEAR	SHEET NO.	TOTAL SHEETS
NO.	DATE	DESCRIPTION	67449/0924019	2014	23	~~57~~

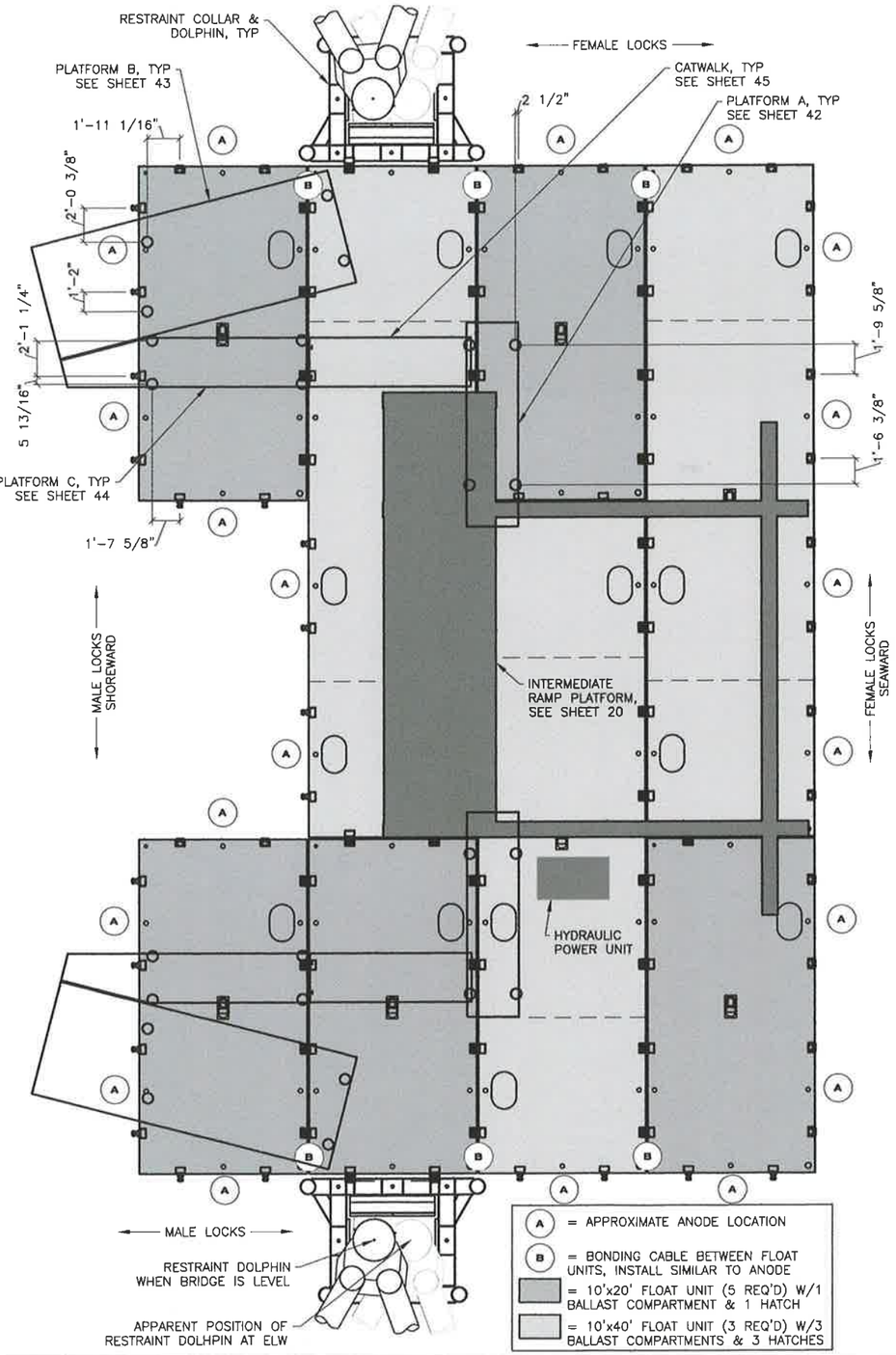

1/24 **FLOAT ASSEMBLY**

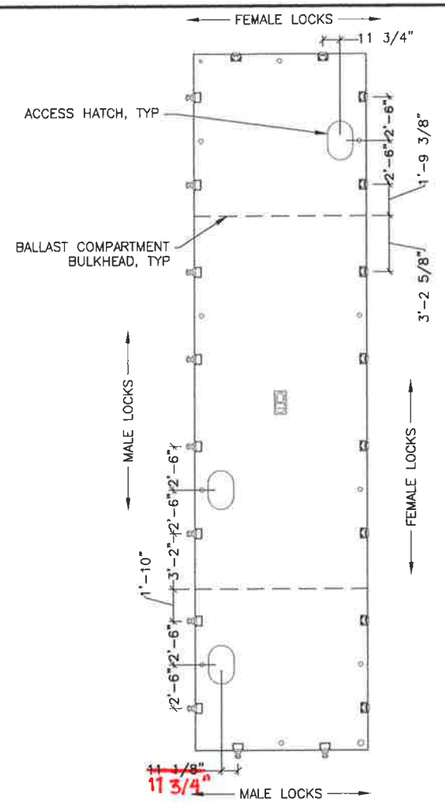

40' FLOAT UNIT
TYPICAL

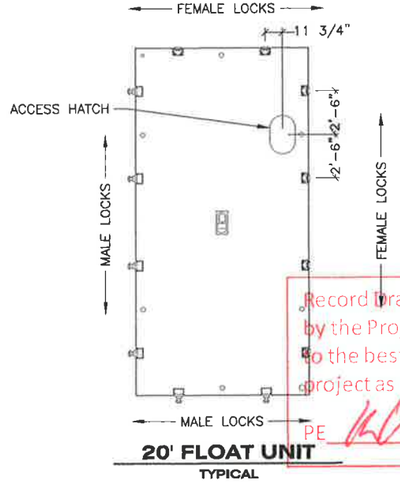

20' FLOAT UNIT
TYPICAL

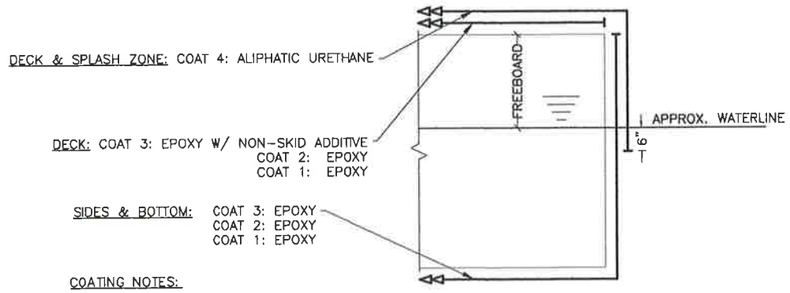

COATING NOTES:

APPLY EPOXY-COMPATIBLE MASTIC SEALER TO GAPS IN FLOAT LOCK ASSEMBLIES AND LIFT SHACKLE ASSEMBLY WELDMENTS PRIOR TO COATING APPLICATION.

COATING SCHEMATIC

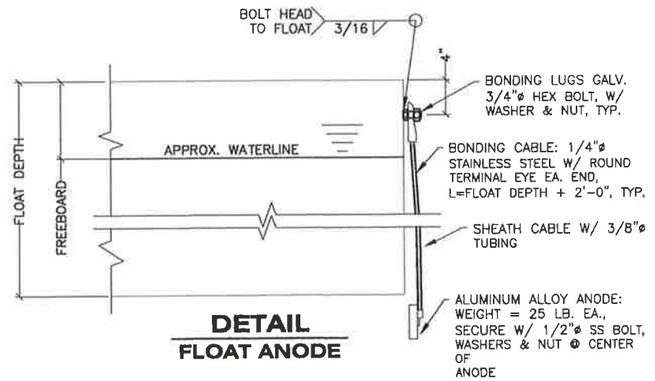

DETAIL
FLOAT ANODE

NOTES:

ACCESS HATCHES: NEW ACCESS HATCHES SHALL BE FREEMAN MODEL 1524, FLUSH, ALUMINUM COVER W/ GALV. STEEL RIM OR EQUAL AND INSTALLED PER MANUFACTURER'S RECOMMENDATIONS. ALL HATCHES TO HAVE REMOVABLE TOPSIDE ACTUATION.

BALLAST: FLOAT SYSTEM SHALL BE BALLASTED WITH POTABLE WATER TO ~2'-0" FREEBOARD ALL AROUND WITH ALL STRUCTURES INSTALLED. NOTE THAT BALLAST MAY BE REQUIRED DURING ERECTION/INSTALLATION OF COMPONENTS ON THE FLOAT SYSTEM.

COAT SYSTEM: COATING SYSTEM FOR EXTERIOR OF FLOAT UNITS SHALL BE SYSTEM 1 AS NOTED ON COATING SCHEMATIC DETAIL AND PER TECHNICAL SPECIFICATIONS. FLOAT ATTACHMENTS AND ASSEMBLIES SHALL BE GALVANIZED AFTER FABRICATION. INTERIOR OF FLOATS SHALL BE UNCOATED.

FLOAT UNITS: FLOAT UNITS ARE FLEXIFLOAT S-70 SERIES FROM: P.O. BOX 79246
HOUSTON, TX 77279
PH: (713) 468-1706
FAX: (713) 468-5822
EMAIL: INFO@FLEXIFOAT.COM

SUMMARY OF CHANGES:
1. ROTATE CAP SHOREWARD 5° FOR RESTRAINT STRUCTURES.

DRAWING SCALES ARE FOR FULL-SIZE SHEETS. IF NO SCALE SHOWN, USE DIMENSIONS.

Record Drawings have been reviewed by the Project Engineer, and represent to the best of my knowledge, the project as constructed.
PE [signature] Date 12/10/15

DESIGNED BY: D. LOWELL
STATE OF ALASKA — 49th — DAVID H. LOWELL — CE-12614 — REGISTERED PROFESSIONAL ENGINEER — 4/22/15
CHECKED BY: STAFF
DRAWN BY: STAFF
PATH: O:\POW\67449\MF\CONSTRUCTION\FLOAT RESTRAINTS\24 - FLOATS_REV 4.22.15.DWG
TAB: 24 Wednesday, April 22, 2015 2:46:54 PM LOWELL, DAVID H (DOT)

STATE OF ALASKA
DEPARTMENT OF TRANSPORTATION & PUBLIC FACILITIES
SOUTHEAST REGION

CLARK BAY FERRY TERMINAL IMPROVEMENTS

FLOAT

REVISIONS NO.	DATE	DESCRIPTION
1	4.22.15	RESTRAINT MOD

PROJECT DESIGNATION	YEAR	SHEET NO.	TOTAL SHEETS
67449/0924019	2014	24	~~57~~

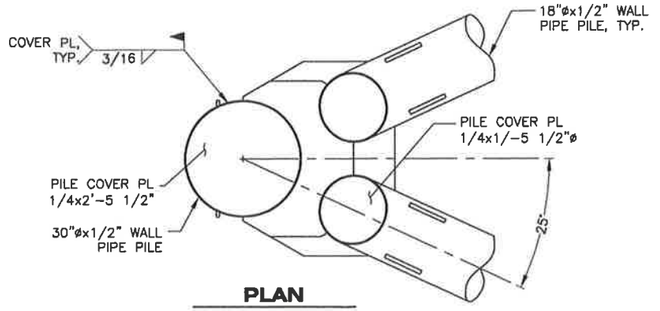

PLAN

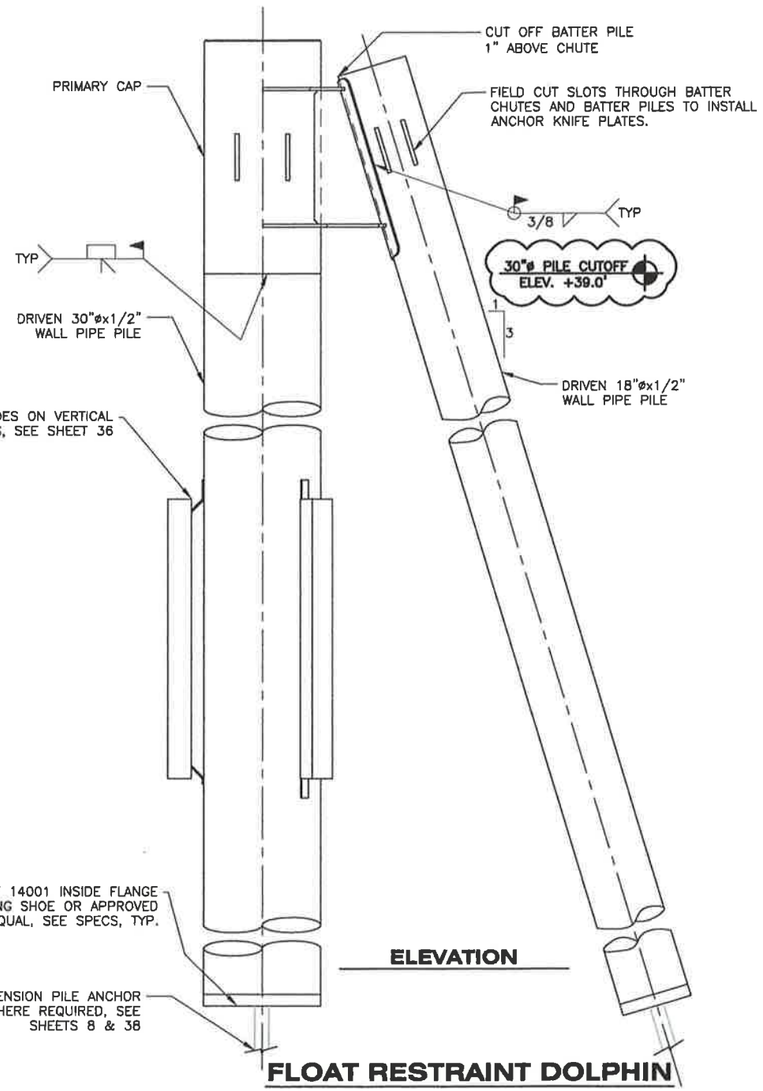

ELEVATION

FLOAT RESTRAINT DOLPHIN

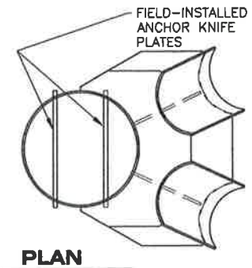

PLAN

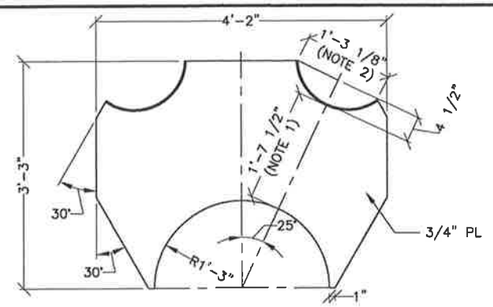

LOWER CHUTE FLANGE

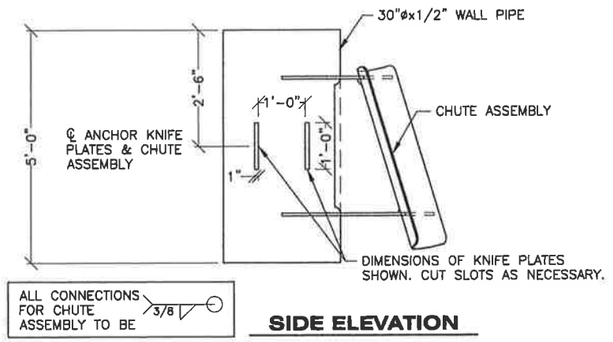

SIDE ELEVATION

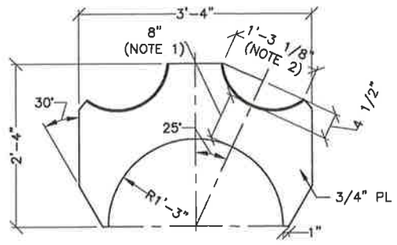

UPPER CHUTE FLANGE

PRIMARY CAP

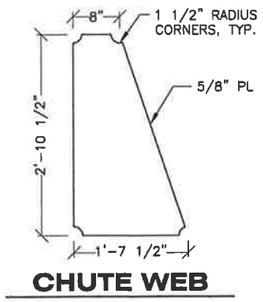

CHUTE WEB

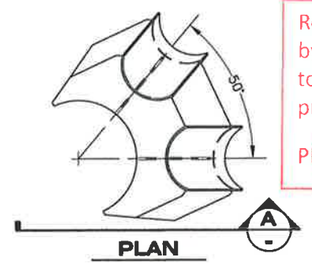

PLAN

Record Drawings have been reviewed by the Project Engineer, and represent to the best of my knowledge, the project as constructed.

PE _____ Date 12/10/15

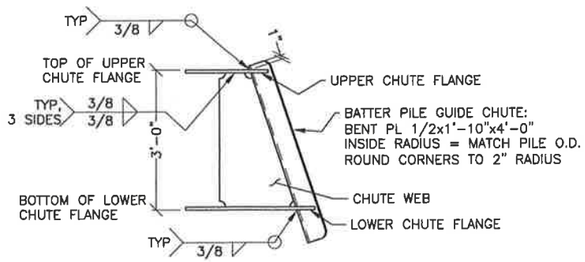

A- ELEVATION CHUTE ASSEMBLY

SUMMARY OF CHANGES:
1. REVISED 30" PILE CUTOFF ELEVATION.

NOTES:
1. DIMENSION ON TOP SIDE OF PL
2. APPROXIMATE DIMENSIONS SHOWN, CUT AND BEVEL ELLIPSE TO FIT BATTER CHUTE, TYP.

DRAWING SCALES ARE FOR FULL-SIZE SHEETS. IF NO SCALE SHOWN, USE DIMENSIONS.

DESIGNED BY: D. LOWELL
CHECKED BY: STAFF
DRAWN BY: STAFF
PATH: Q:\POW\67449\MF\CONSTRUCTION\FLOAT RESTRAINTS\25 – FLOAT RESTRAINT DOLPHINS_REV 10.16.1
TAB: 25 Monday, October 20, 2014 12:08:33 PM LOWELL, DAVID H (DOT)

STATE OF ALASKA
DEPARTMENT OF TRANSPORTATION & PUBLIC FACILITIES
SOUTHEAST REGION

CLARK BAY FERRY TERMINAL IMPROVEMENTS

FLOAT RESTRAINT DOLPHINS

STATE OF ALASKA 49th DAVID H. LOWELL CE-12614 REGISTERED PROFESSIONAL ENGINEER 10/20/14

REVISIONS NO.	DATE	DESCRIPTION	PROJECT DESIGNATION	YEAR	SHEET NO.	TOTAL SHEETS
1	10.20.14	CUTOFF ELEV REV	67449/0924019	2014	25	~~57~~

Record Drawings have been reviewed by the Project Engineer, and represent to the best of my knowledge, the project as constructed.

PE _____ Date 12/10/15

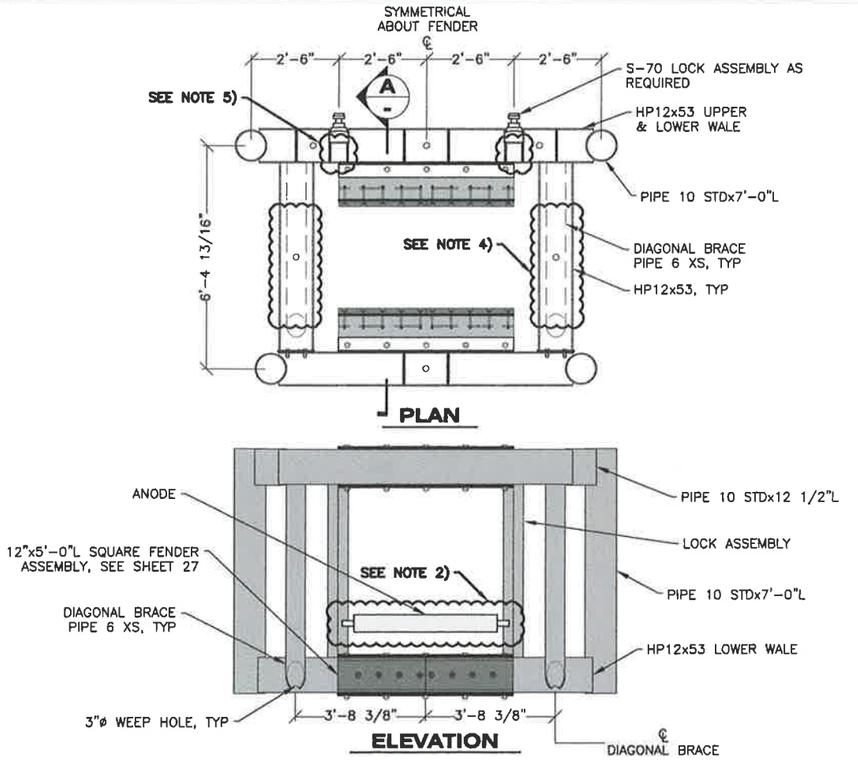

FLOAT RESTRAINT COLLAR ASSEMBLY
(1 W/ MALE LOCK & 1 W/ FEMALE LOCK)

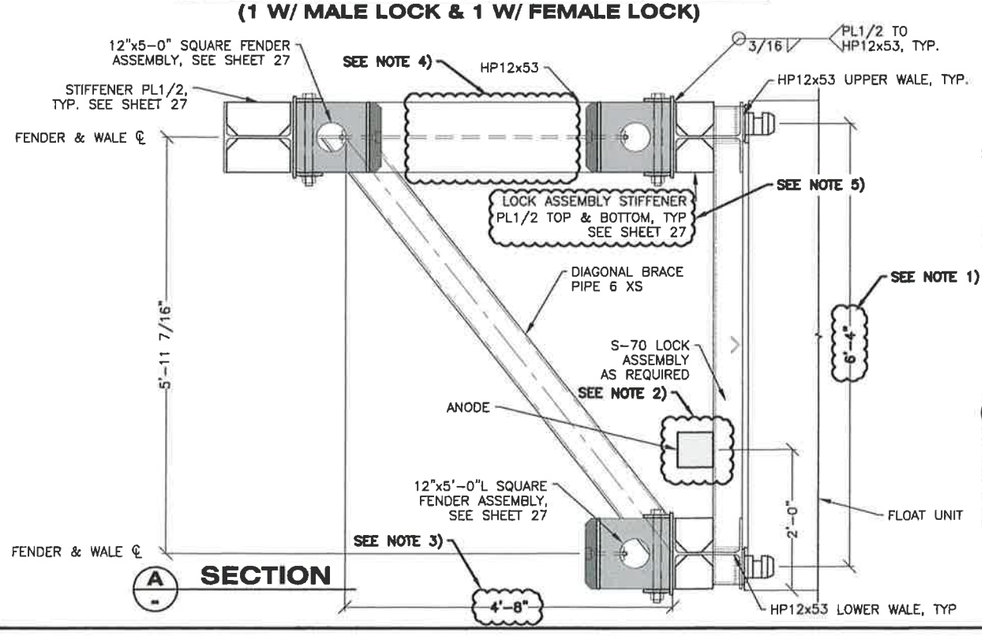

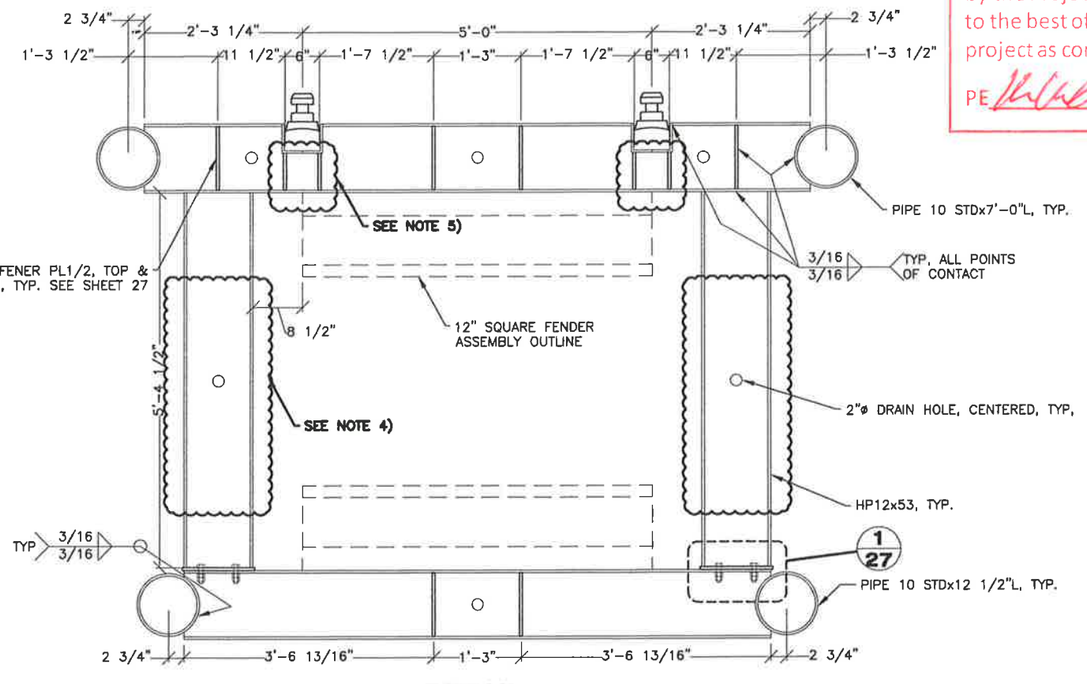

DETAIL
UPPER WALE

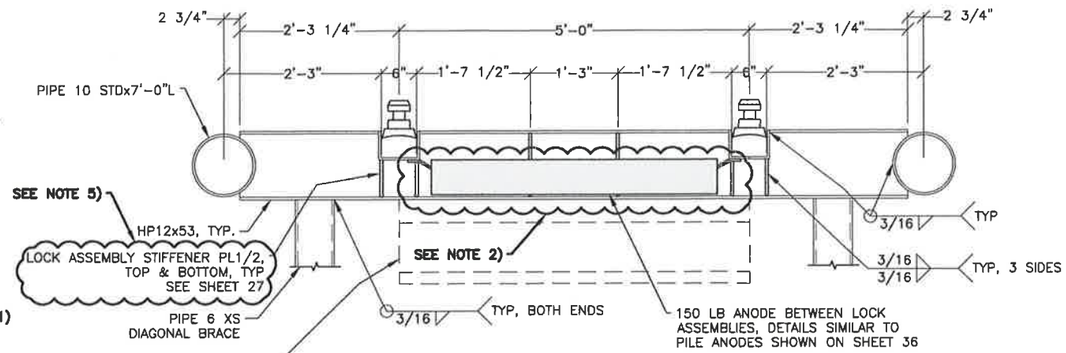

DETAIL
LOWER WALE

SUMMARY OF CHANGES:

1. REVISED FLEXIFLOAT LOCK SPACING. RESTRAINT COLLAR HEIGHT REMAINS THE SAME.
2. CHANGED LOCATION OF ANODE.
3. CHANGED DIMENSION OF DIAGONAL BRACE.
4. OMITTED UHMW WEAR STRIP, ASSOCIATED STIFFENER PLATES, AND SECTION B/27
5. CHANGED LOCK ASSEMBLY STIFFENER PLATE DIMENSIONS.

DRAWING SCALES ARE FOR FULL-SIZE SHEETS. IF NO SCALE SHOWN, USE DIMENSIONS.

DESIGNED BY: D. LOWELL

STATE OF ALASKA, 49th, DAVID H. LOWELL, CE-12814, REGISTERED PROFESSIONAL ENGINEER

10/22/14

CHECKED BY: STAFF

DRAWN BY: STAFF

PATH: Q:\POW\67449\MF\CONSTRUCTION\RESTRAINT COLLAR\26-27 - FLOAT RESTRAINT COLLARS_REV 10.2

TAB: 26 Wednesday, October 22, 2014 9:46:35 AM LOWELL, DAVID H (DOT)

STATE OF ALASKA
DEPARTMENT OF TRANSPORTATION & PUBLIC FACILITIES
SOUTHEAST REGION

CLARK BAY FERRY TERMINAL IMPROVEMENTS

FLOAT RESTRAINT COLLARS

REVISIONS NO.	DATE	DESCRIPTION	PROJECT DESIGNATION	YEAR	SHEET NO.	TOTAL SHEETS
2	10.20.14	COLLAR REVISION	67449/0924019	2014	26	~~57~~

NOTE:
HP12x53 WALE NOT SHOWN

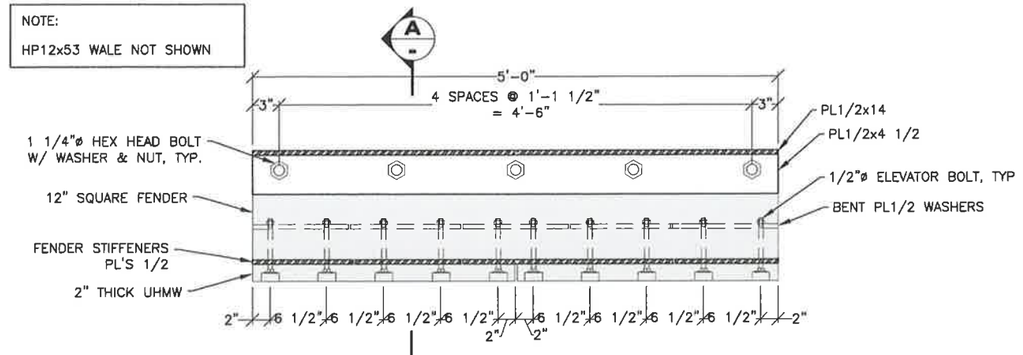

5'-0" LENGTH
(TOTAL 6 REQUIRED)

12" SQUARE FENDER ASSEMBLY PLAN

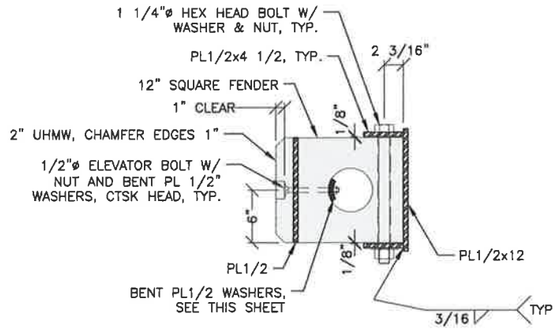

A / - **SECTION**

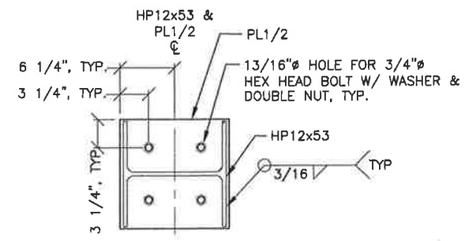

1 / 27 **DETAIL**
CONNECTION PL1/2
FROM SHEET 22

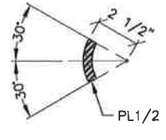

C / - **ELEVATION**

SUMMARY OF CHANGES:
1. OMITTED 2" UHMW WEAR STRIP DETAIL AND SECTION
2. REVISED LOCK ASSEMBLY STIFFENER PLATE DETAIL.

B / 27

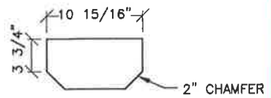

STIFFENER PL1/2

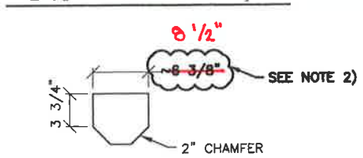

LOCK ASSEMBLY STIFFENER PL1/2

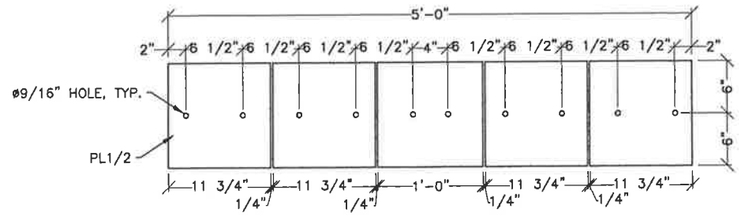

FENDER STIFFENER PL'S 1/2
5'-0" LENGTH

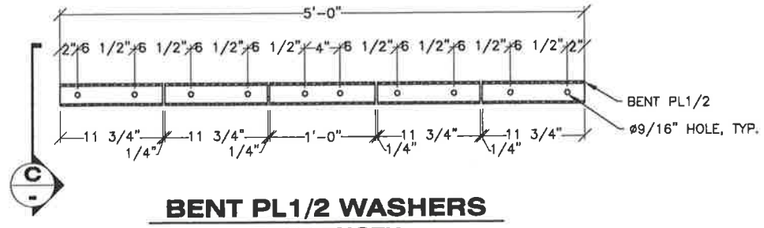

C / - **BENT PL1/2 WASHERS**
5'-0" LENGTH

DRAWING SCALES ARE FOR FULL-SIZE SHEETS. IF NO SCALE SHOWN, USE DIMENSIONS.

DESIGNED BY: D. LOWELL	STATE OF ALASKA DEPARTMENT OF TRANSPORTATION & PUBLIC FACILITIES SOUTHEAST REGION
STATE OF ALASKA 49th DAVID R. LOWELL CE-12614 REGISTERED PROFESSIONAL ENGINEER 10/22/14	**CLARK BAY FERRY TERMINAL IMPROVEMENTS** **FLOAT RESTRAINT COLLAR DETAILS**
CHECKED BY: STAFF	
DRAWN BY: STAFF	

PATH: Q:\POW\67449\MF\CONSTRUCTION\RESTRAINT COLLAR\26-27 – FLOAT RESTRAINT COLLARS_REV 10.2
TAB: 27 Wednesday, October 22, 2014 9:46:54 AM LOWELL, DAVID H (DOT)

REVISIONS NO.	DATE	DESCRIPTION	PROJECT DESIGNATION	YEAR	SHEET NO.	TOTAL SHEETS
1	10.20.14	COLLAR REVISION	67449/0924019	2014	27	~~57~~

Record Drawings have been reviewed by the Project Engineer, and represent to the best of my knowledge, the project as constructed.
PE [signature] Date 12/10/15

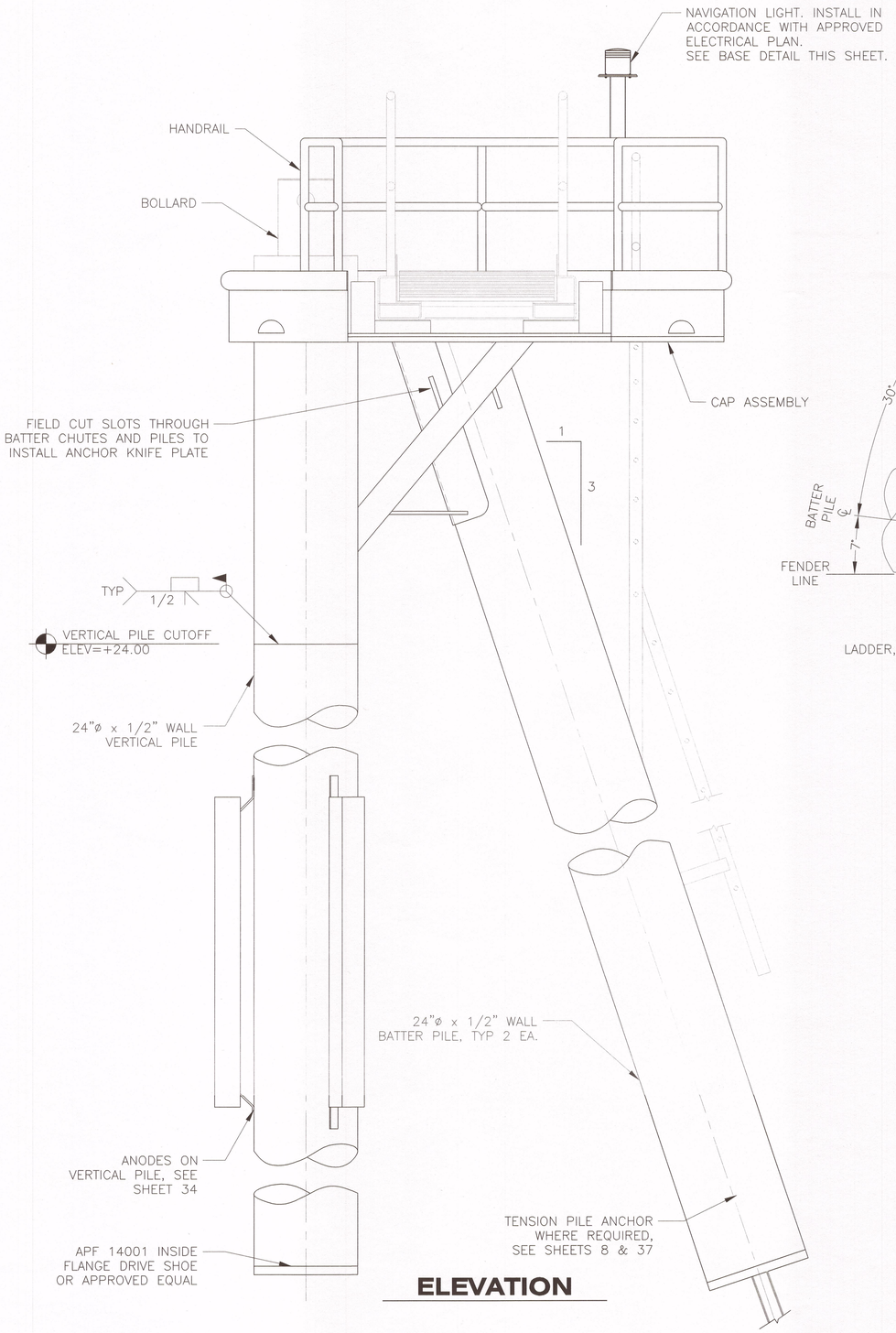

ELEVATION

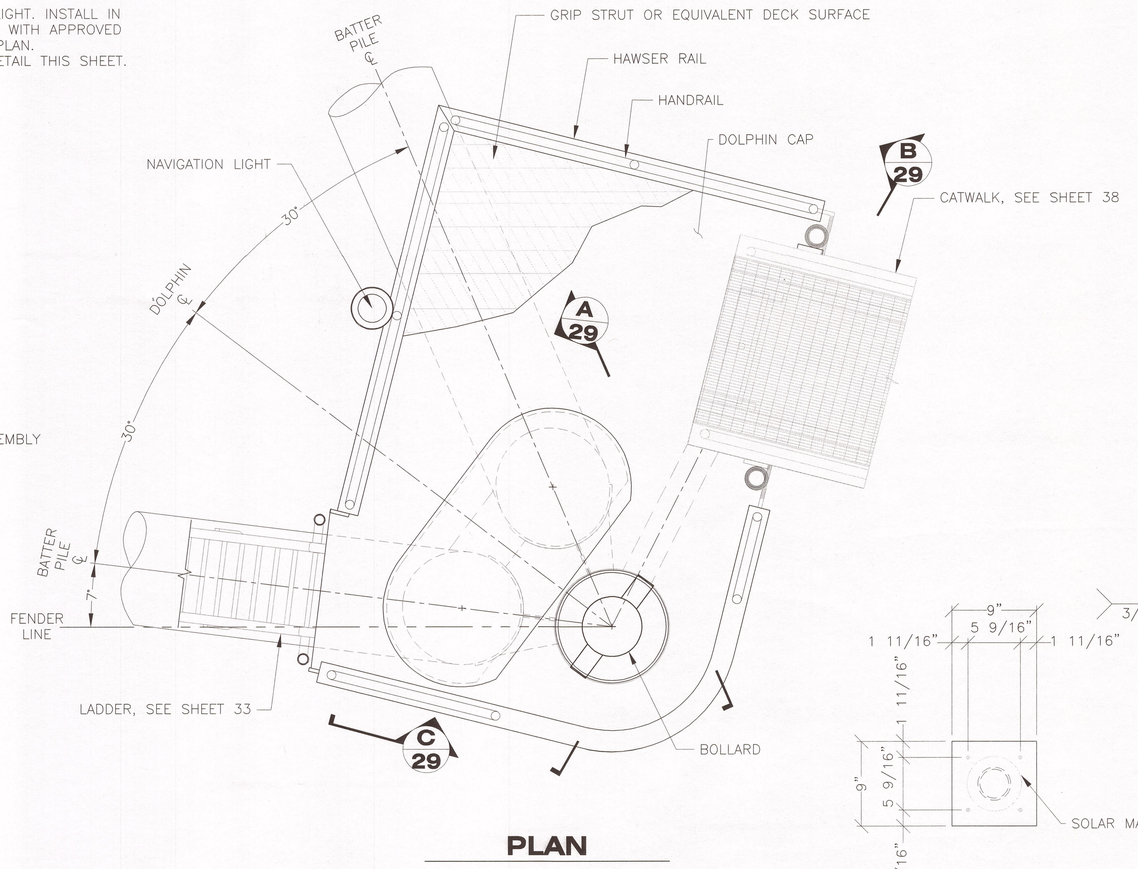

PLAN

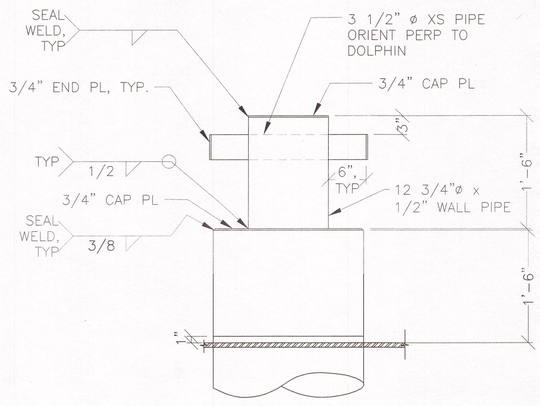

BOLLARD

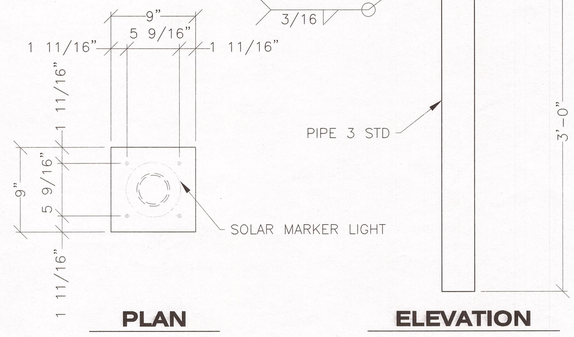

PLAN

ELEVATION

NAV LIGHT BASE

MARKER LIGHT NOTES:
1. LIGHT ONLY REQUIRED ON DOLPHINS W2 & E3.
2. CARMANAH MODEL 702-5 LIGHT FIXTURE OR EQUAL. SEE SPECS.
3. MARKER LIGHT COLOR SHALL BE RED.
4. VERIFY BASE BOLT PATTERN WITH MANUFACTURER PRIOR TO FABRICATION OF MOUNTING PLATE.

DRAWING SCALES ARE FOR FULL-SIZE SHEETS. IF NO SCALE SHOWN, USE DIMENSIONS.

Record Drawings have been reviewed by the Project Engineer, and represent to the best of my knowledge, the project as constructed.
PE _____ Date 12/1/15

DESIGNED BY: D. LOWELL
CHECKED BY: STAFF
DRAWN BY: STAFF

STATE OF ALASKA
49th
DAVID H. LOWELL
CE-12614
REGISTERED PROFESSIONAL ENGINEER
6/6/14

STATE OF ALASKA
DEPARTMENT OF TRANSPORTATION & PUBLIC FACILITIES
SOUTHEAST REGION

CLARK BAY FERRY TERMINAL IMPROVEMENTS

PLAN & ELEVATION DOLPHIN W2

PATH: Q:\POW\67449\PLANSET\MF\28-29 - DOLPHIN W2 PLAN & ELEVATION.DWG
TAB: 28 Friday, June 06, 2014 12:09:31 PM LOWELL, DAVID H (DOT)

REVISIONS		
NO.	DATE	DESCRIPTION

PROJECT DESIGNATION	YEAR	SHEET NO.	TOTAL SHEETS
67449/0924019	2014	28	~~57~~

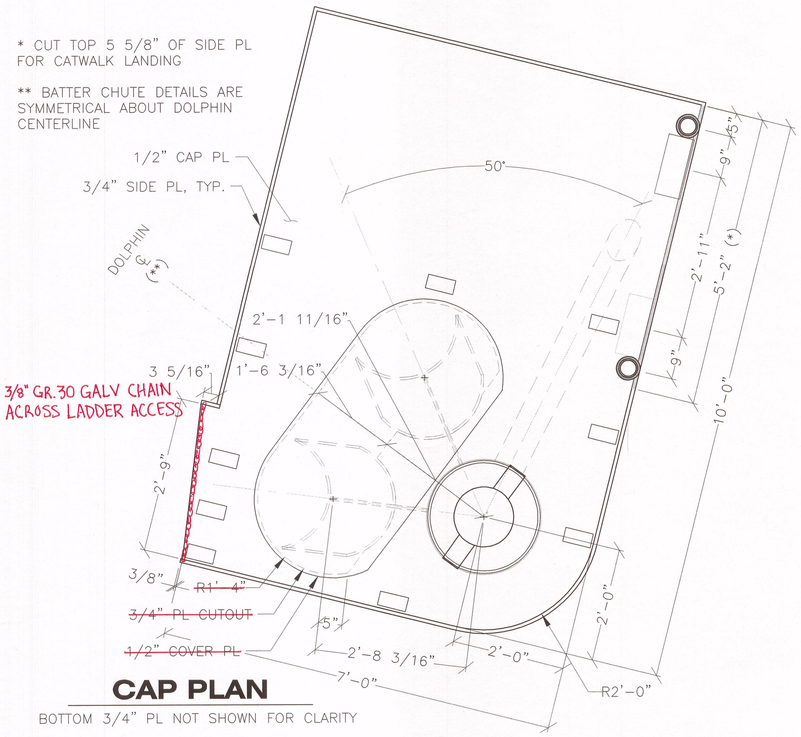

CAP PLAN

BOTTOM 3/4" PL NOT SHOWN FOR CLARITY

NOTES:
1. TERMINATE WELD 1" FROM CAP PL AND 3" RETURN AT CORNER ONLY.
2. 1/2" FORMED PL BATTER CHUTE. ROLL ID TO OD OF BATTER PILE.

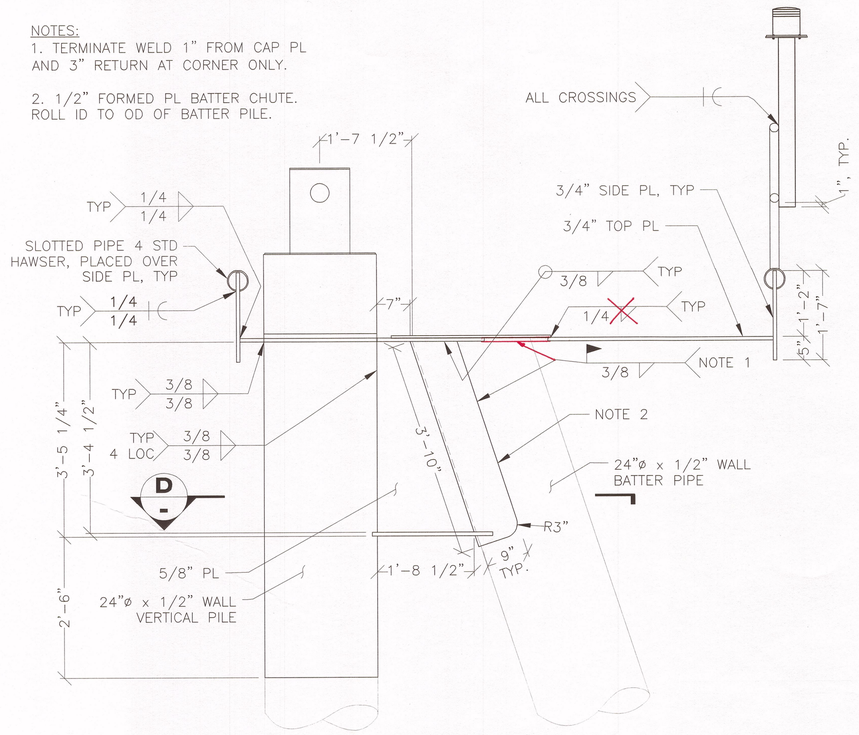

A/29 SECTION

DECKING NOTES

1. 14 GAUGE, SERRATED, 10-DIAMOND GRIP STRUT OR APPROVED EQUAL DECK SURFACE PLANKS
2. INSTALL ANCHORING DEVICE CLIPS USING STUDS WELDED TO THE DECK PL OR AS RECOMMENDED BY MANUFACTURER, TYP.
3. 2" TRIM BAND FOR CIRCULAR CUTS, WITH 1/2" MINIMUM CLEARANCE BETWEEN BASE OF BOLLARD AND GRATING OR SIDE PL AND GRATING

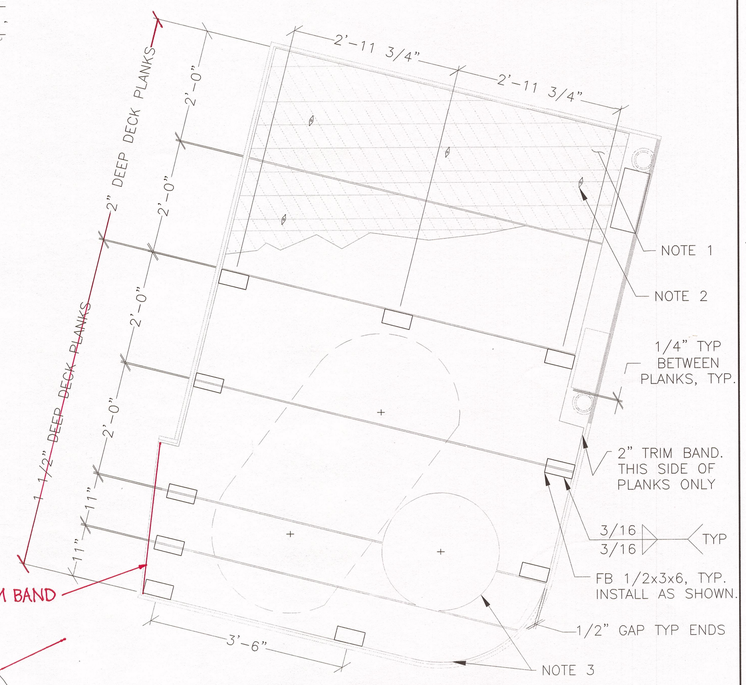

DECK SURFACE PLAN

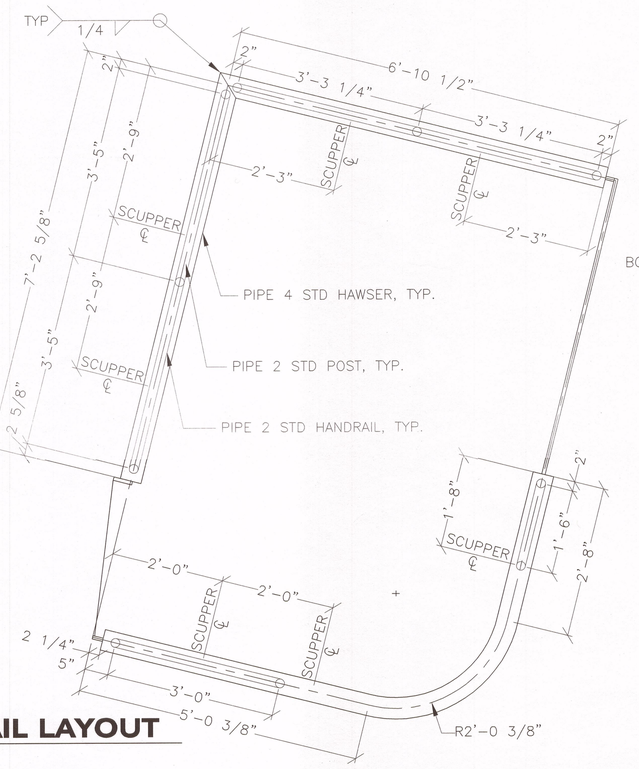

RAIL LAYOUT

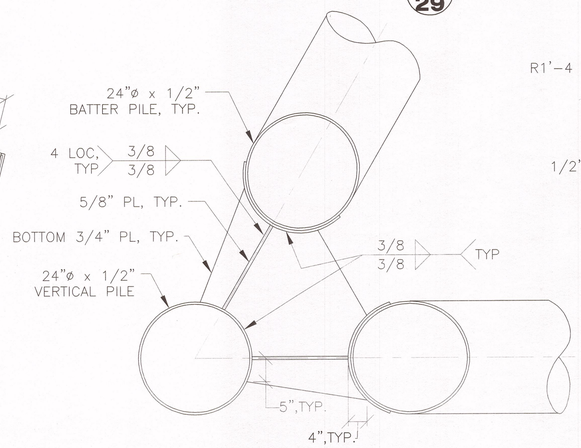

D/- SECTION

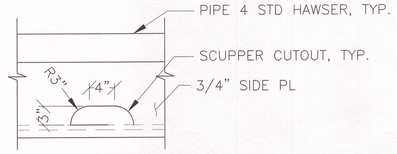

C/29 SECTION

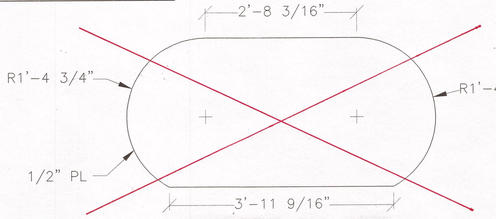

COVER PLATE

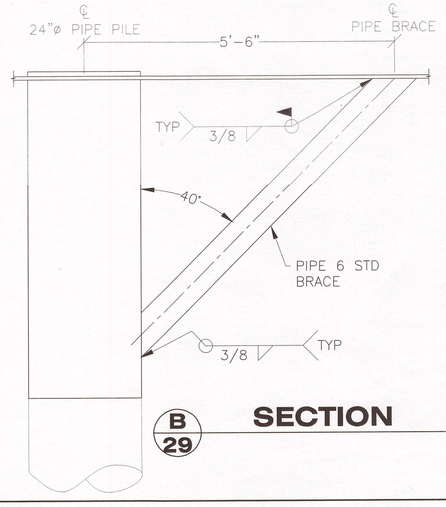

B/29 SECTION

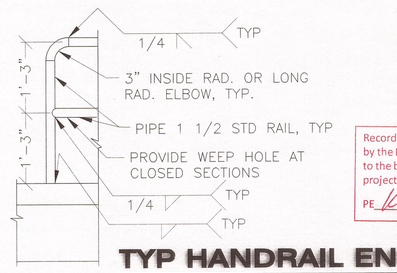

TYP HANDRAIL END

Record Drawings have been reviewed by the Project Engineer, and represent to the best of my knowledge, the project as constructed.
PE [signature] Date 12/10/15

DRAWING SCALES ARE FOR FULL-SIZE SHEETS. IF NO SCALE SHOWN, USE DIMENSIONS.

DESIGNED BY: D. LOWELL	STATE OF ALASKA DEPARTMENT OF TRANSPORTATION & PUBLIC FACILITIES SOUTHEAST REGION
STATE OF ALASKA 49th DAVID H. LOWELL CE-12614 REGISTERED PROFESSIONAL ENGINEER 6/6/14	**CLARK BAY FERRY TERMINAL IMPROVEMENTS** **DETAILS DOLPHIN W2**
CHECKED BY: STAFF	
DRAWN BY: STAFF	
PATH: Q:\POW\67449\PLANSET\MF\28-29 - DOLPHIN W2 PLAN & ELEVATION.DWG	
TAB: 29 Friday, June 06, 2014 12:10:24 PM LOWELL, DAVID H (DOT)	

REVISIONS NO.	DATE	DESCRIPTION	PROJECT DESIGNATION	YEAR	SHEET NO.	TOTAL SHEETS
			67449/0924019	2014	29	~~57~~

Addendum #2, Attachment #4

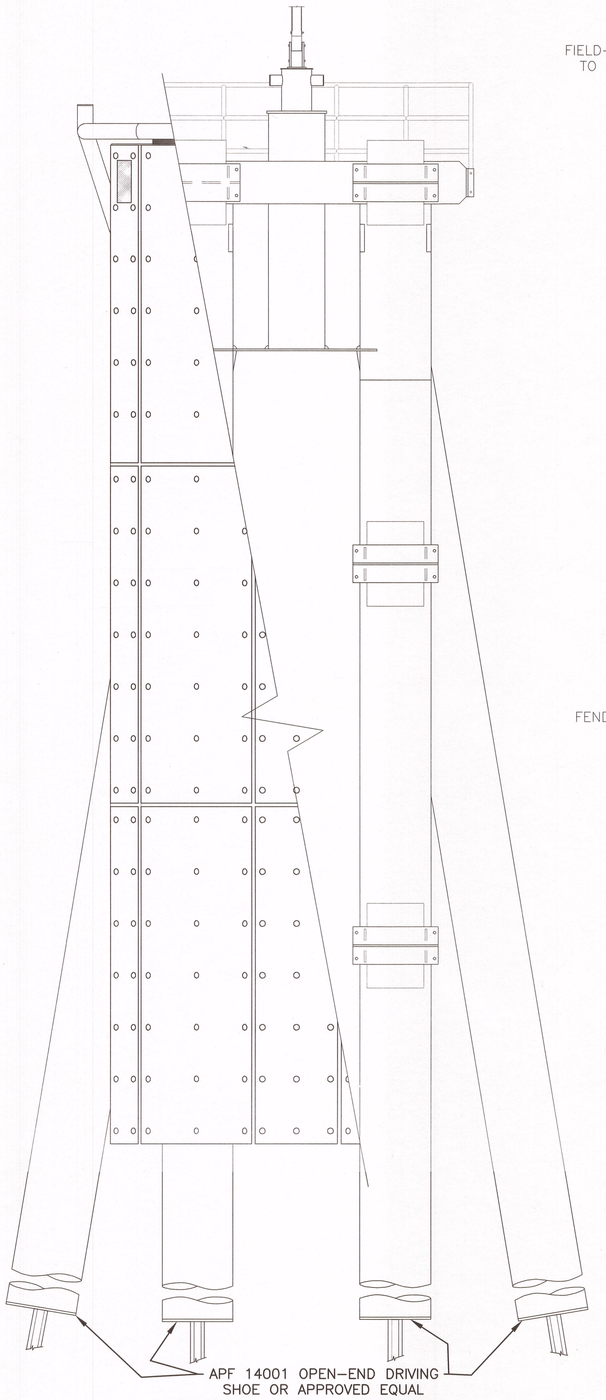

FRONT ELEVATION
BREASTING DOLPHIN

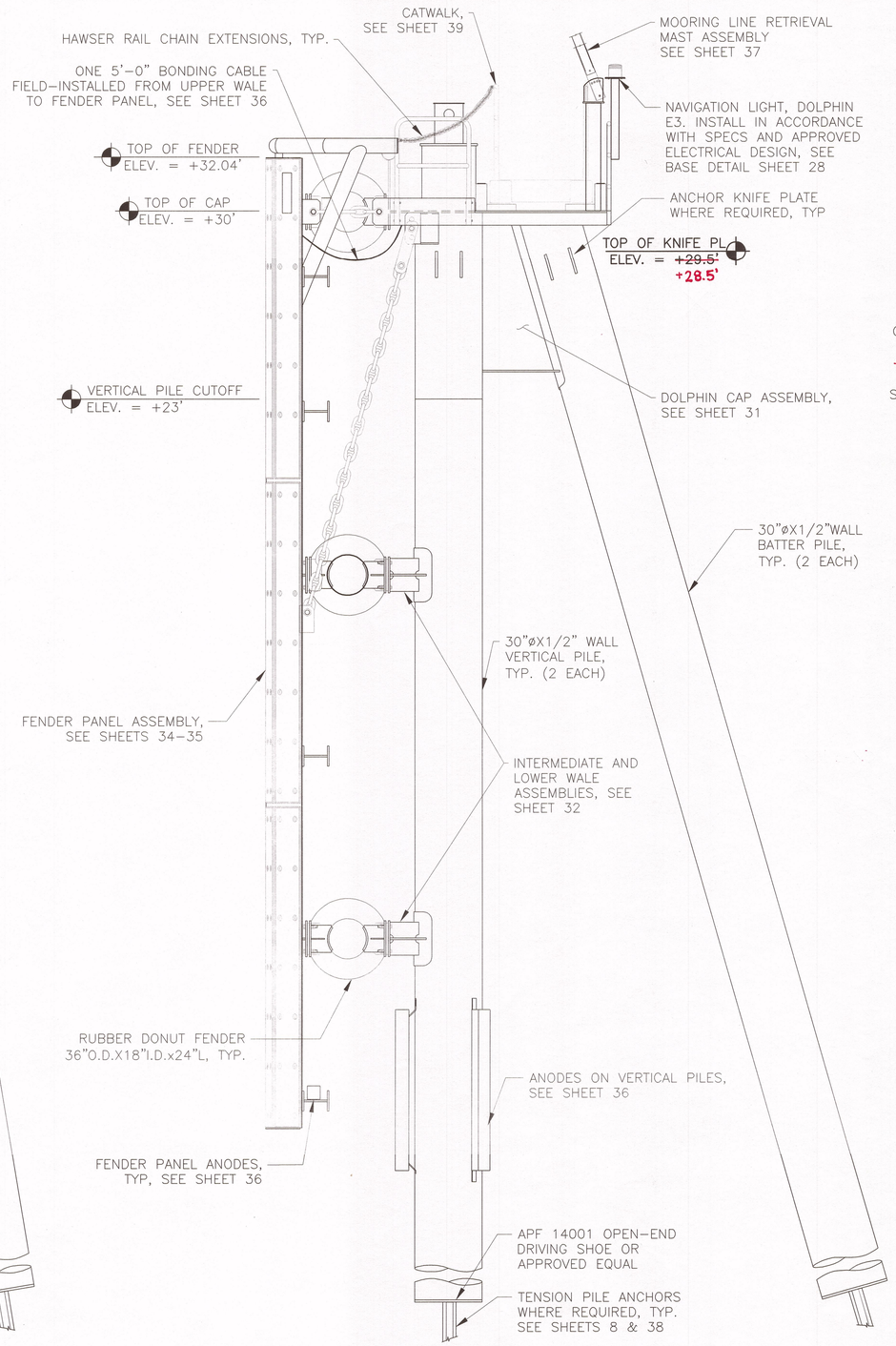

SIDE ELEVATION
BREASTING DOLPHIN

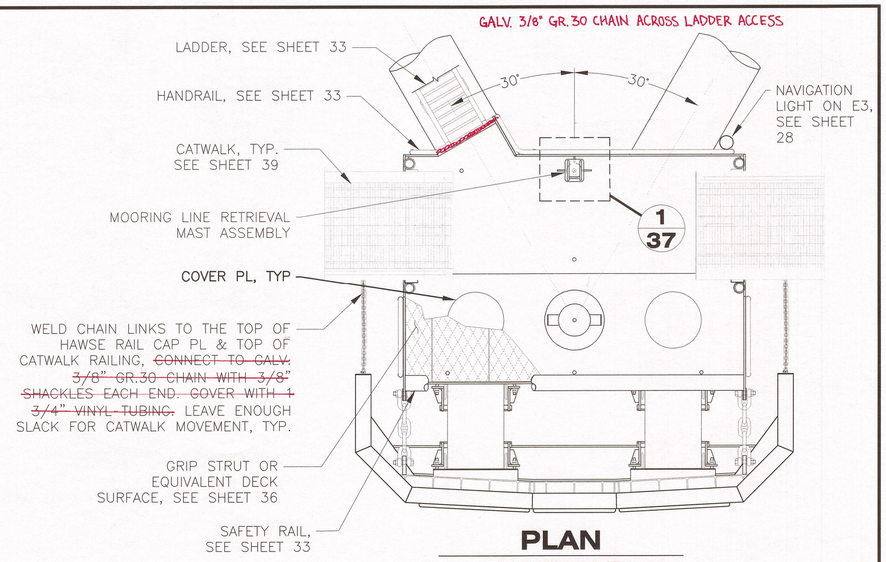

PLAN
DOLPHIN E2
DOLPHIN E3 DETAILS SIMILAR EXCEPT WHERE NOTED

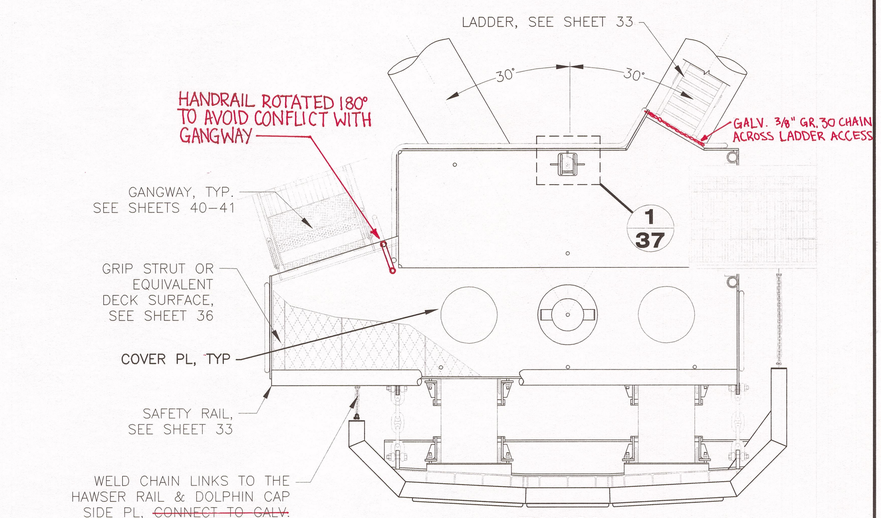

PLAN
DOLPHIN E1
DOLPHIN W1 DETAILS OPPOSITE HAND
SIMILAR EXCEPT WHERE NOTED

DRAWING SCALES ARE FOR FULL-SIZE SHEETS. IF NO SCALE SHOWN, USE DIMENSIONS.

Record Drawings have been reviewed by the Project Engineer, and represent to the best of my knowledge, the project as constructed.
PE [signature] Date 12/0/15

DESIGNED BY: D. LOWELL
STATE OF ALASKA - 49th - DAVID H. LOWELL - CE-12614 - REGISTERED PROFESSIONAL ENGINEER
7/10/14
CHECKED BY: STAFF
DRAWN BY: STAFF

STATE OF ALASKA
DEPARTMENT OF TRANSPORTATION & PUBLIC FACILITIES
SOUTHEAST REGION

CLARK BAY FERRY TERMINAL IMPROVEMENTS

PLAN & ELEVATION - W1, E1-E3 DOLPHINS

PATH: Q:\POW\67449\PLANSET\MF\30-37(1) - DOLPHIN E1-E3, W1 & ANODE DETS - ADDENDUM.DWG
TAB: 30 Thursday, July 10, 2014 11:48:42 AM LOWELL, DAVID H (DOT)

REVISIONS NO.	DATE	DESCRIPTION	PROJECT DESIGNATION	YEAR	SHEET NO.	TOTAL SHEETS
1	7.10.14	CAP REV	67449/0924019	2014	30	~~57~~

Addendum #2, Attachment #5

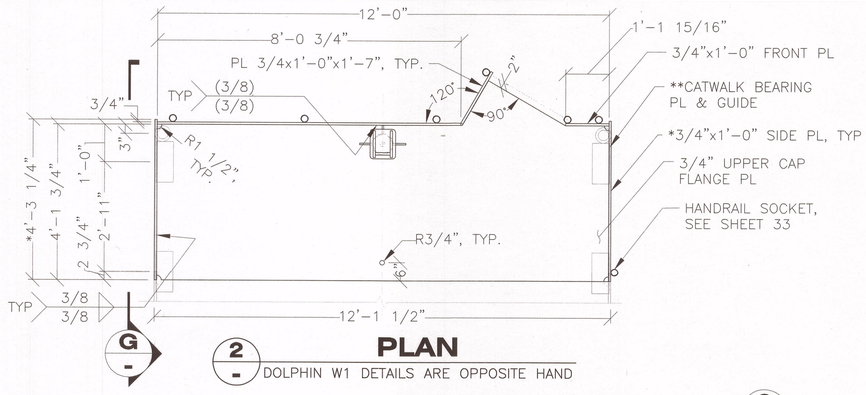

G - 2 - PLAN

DOLPHIN W1 DETAILS ARE OPPOSITE HAND

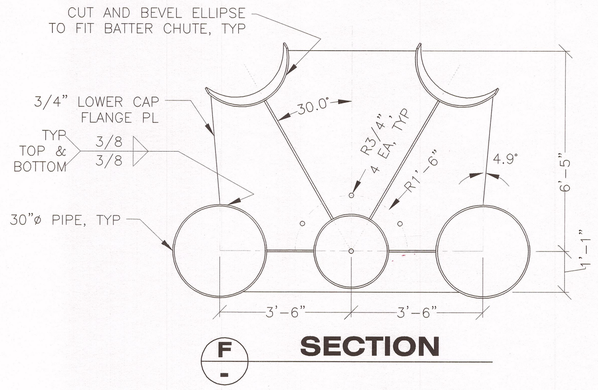

F - SECTION

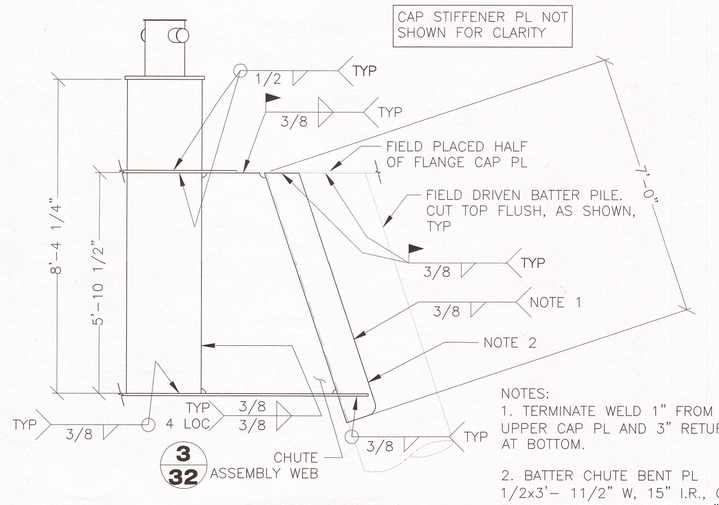

NOTES:
1. TERMINATE WELD 1" FROM UPPER CAP PL AND 3" RETURN AT BOTTOM.
2. BATTER CHUTE BENT PL 1/2x3'- 11/2" W, 15" I.R., CUT FLUSH AT TOP AS SHOWN, 3" RADIUS AT BOTTOM CORNERS, TYP.

D - SECTION

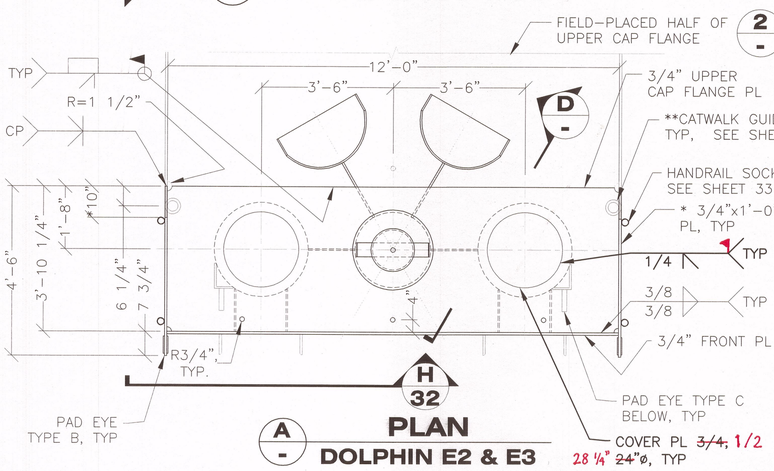

A - H 32 PLAN

DOLPHIN E2 & E3

CATWALK BEARING PL & GUIDE NOTES
* REMOVE TOP 5 5/8" OF SIDE PL FOR CATWALK LANDING ON EACH SIDE OF DOLPHIN E2 CAP AND WEST SIDE OF DOLPHIN E3 CAP.

** INSTALL CATWALK BEARING PL AND GUIDE ON BOTH SIDES OF DOLPHIN E2, WEST SIDE OF E3 & W1 AND EAST SIDE OF E1.

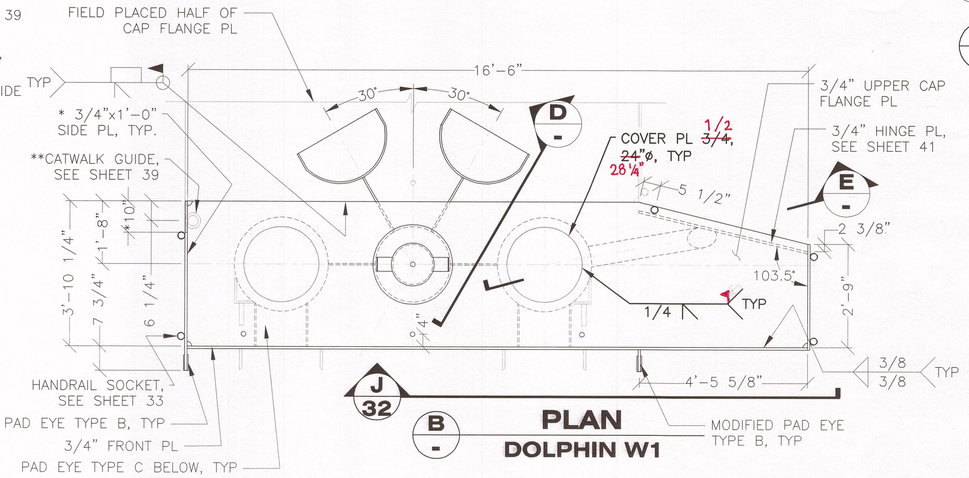

J 32 B - PLAN

DOLPHIN W1

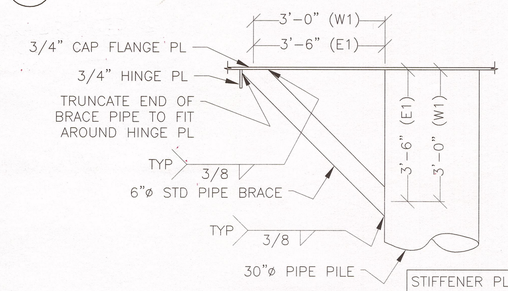

STIFFENER PLATES NOT SHOWN FOR CLARITY

E - SECTION

W1 OPPOSITE OF SHOWN

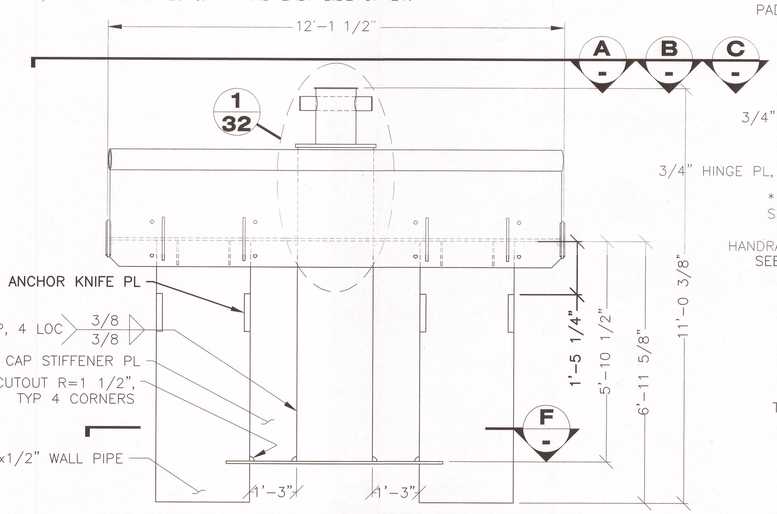

DOLPHIN CAP FRONT ELEVATION

CHUTE ASSEMBLY NOT SHOWN FOR CLARITY

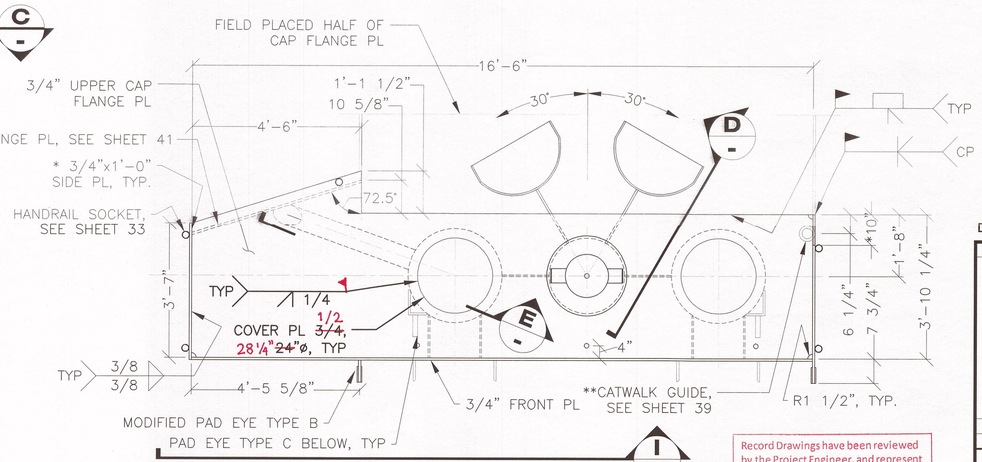

I 32 C - PLAN

DOLPHIN E1

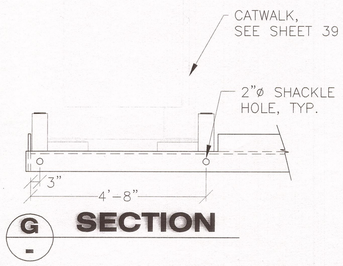

G - SECTION

DRAWING SCALES ARE FOR FULL-SIZE SHEETS. IF NO SCALE SHOWN, USE DIMENSIONS.

Record Drawings have been reviewed by the Project Engineer, and represent to the best of my knowledge, the project as constructed.
PE [signature] Date 12/10/15

DESIGNED BY: D. LOWELL
CHECKED BY: STAFF
DRAWN BY: STAFF

STATE OF ALASKA
DEPARTMENT OF TRANSPORTATION & PUBLIC FACILITIES
SOUTHEAST REGION

STATE OF ALASKA 49th DAVID H. LOWELL CE-12614 PROFESSIONAL ENGINEER 7/10/14

CLARK BAY FERRY TERMINAL IMPROVEMENTS

DOLPHIN CAP DETAILS

PATH: Q:\POW\67449\PLANSET\MF\30-37(1) – DOLPHIN E1-E3, W1 & ANODE DETS – ADDENDUM.DWG
TAB: 31 Thursday, July 10, 2014 11:49:57 AM LOWELL, DAVID H (DOT)

REVISIONS NO.	DATE	DESCRIPTION	PROJECT DESIGNATION	YEAR	SHEET NO.	TOTAL SHEETS
1	7.10.14	CAP REV	67449/0924019	2014	31	~~57~~

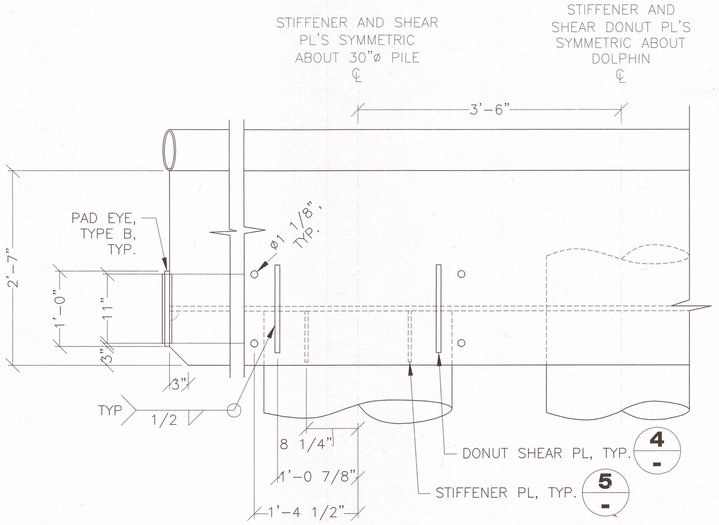

H/32 I/32 J/32 SECTION

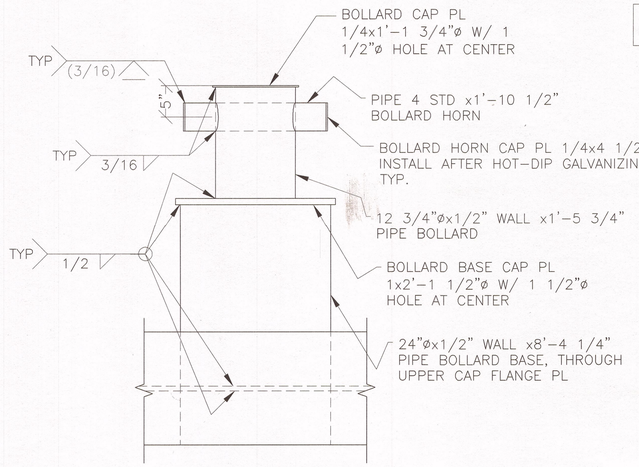

1/32 DETAIL

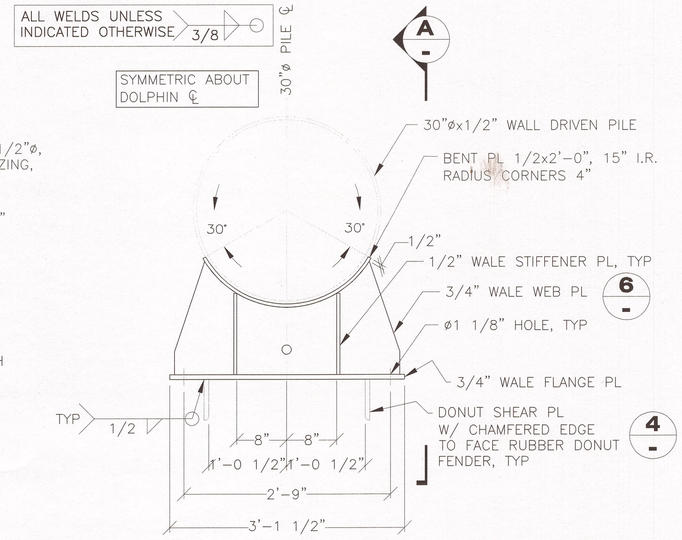

INTERMEDIATE & LOWER WALE ASSEMBLY

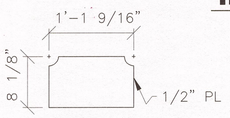

5 - DETAIL



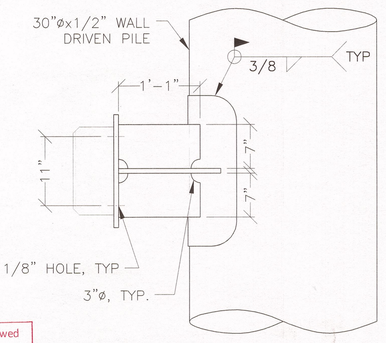

A - SECTION

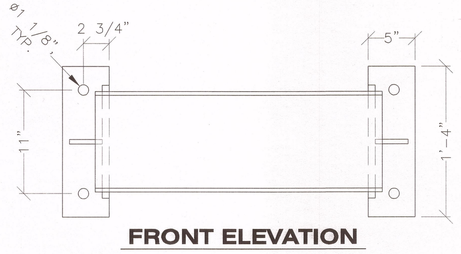

FRONT ELEVATION

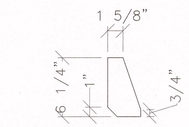

7 - DETAIL

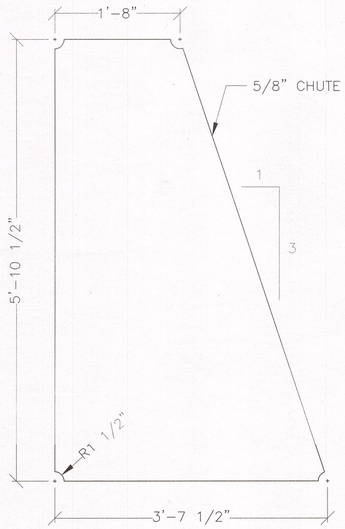

3/32 DETAIL

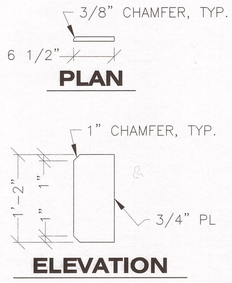

4 - DETAIL

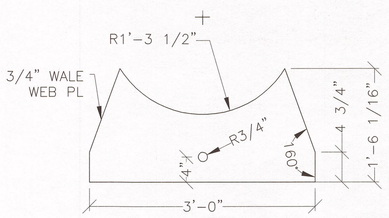

6 - DETAIL

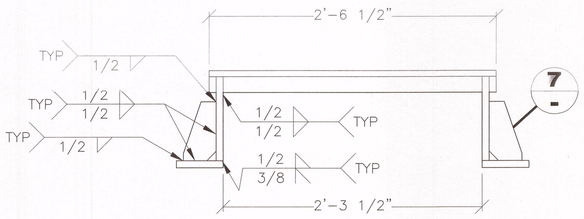

PLAN

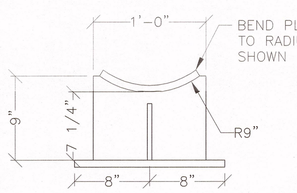

SIDE ELEVATION

DONUT FENDER MOUNT BRACKET

ALL PL 3/4

Record Drawings have been reviewed by the Project Engineer, and represent to the best of my knowledge, the project as constructed.

PE _____ Date 12/01/15

DRAWING SCALES ARE FOR FULL-SIZE SHEETS. IF NO SCALE SHOWN, USE DIMENSIONS.

DESIGNED BY: D. LOWELL

STATE OF ALASKA 49th DAVID H. LOWELL CE-12614 REGISTERED PROFESSIONAL ENGINEER 6/6/14

CHECKED BY: STAFF

DRAWN BY: STAFF

PATH: O:\POW\67449\PLANSET\MF\30-37 - DOLPHIN E1-E3, W1 & ANODE DETS.DWG

TAB: 32 Friday, June 06, 2014 1:04:57 PM LOWELL, DAVID H (DOT)

STATE OF ALASKA
DEPARTMENT OF TRANSPORTATION & PUBLIC FACILITIES
SOUTHEAST REGION

CLARK BAY FERRY TERMINAL IMPROVEMENTS

CAP AND INTERMEDIATE AND LOWER WALE DETAILS

REVISIONS NO.	DATE	DESCRIPTION	PROJECT DESIGNATION	YEAR	SHEET NO.	TOTAL SHEETS
			67449/0924019	2014	32	~~57~~

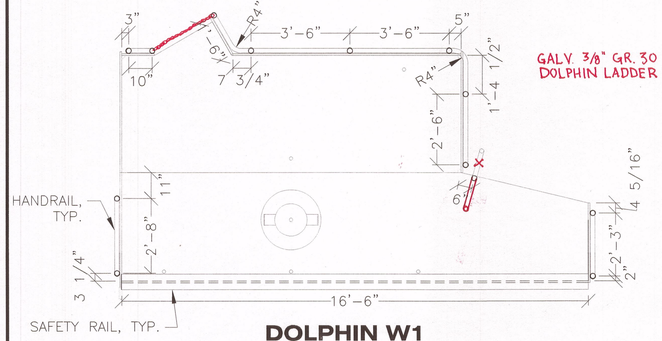

DOLPHIN W1

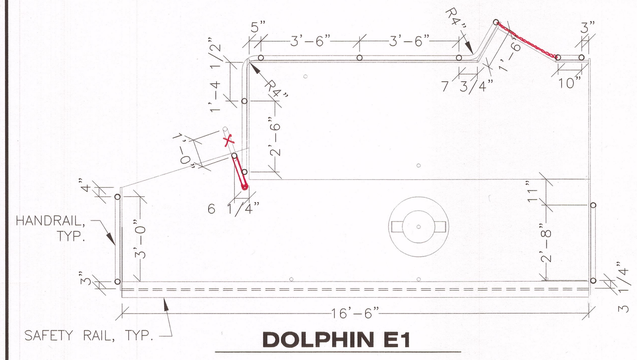

DOLPHIN E1

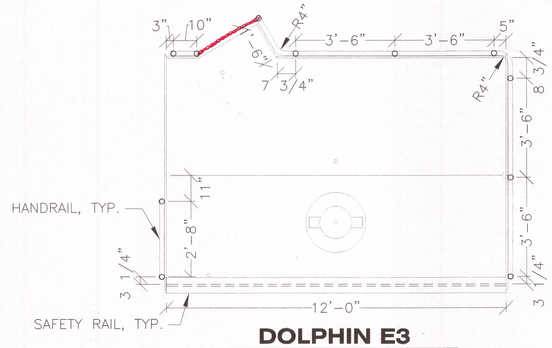

DOLPHIN E3

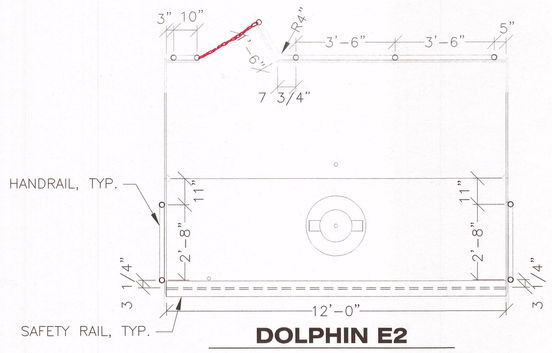

DOLPHIN E2

RAILING AND SOCKET PLAN

GALV. 3/8" GR. 30 CHAIN ACROSS ALL DOLPHIN LADDER ACCESSES

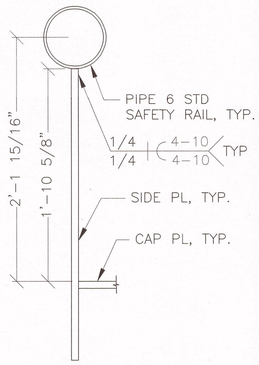

SAFETY RAIL

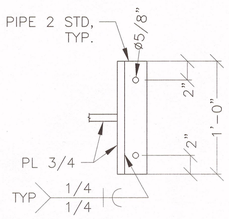

HANDRAIL SOCKET

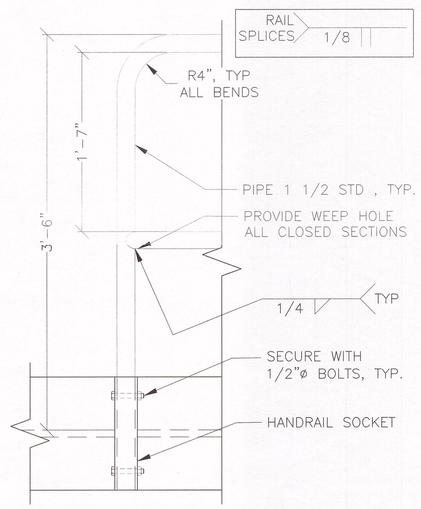

HANDRAIL

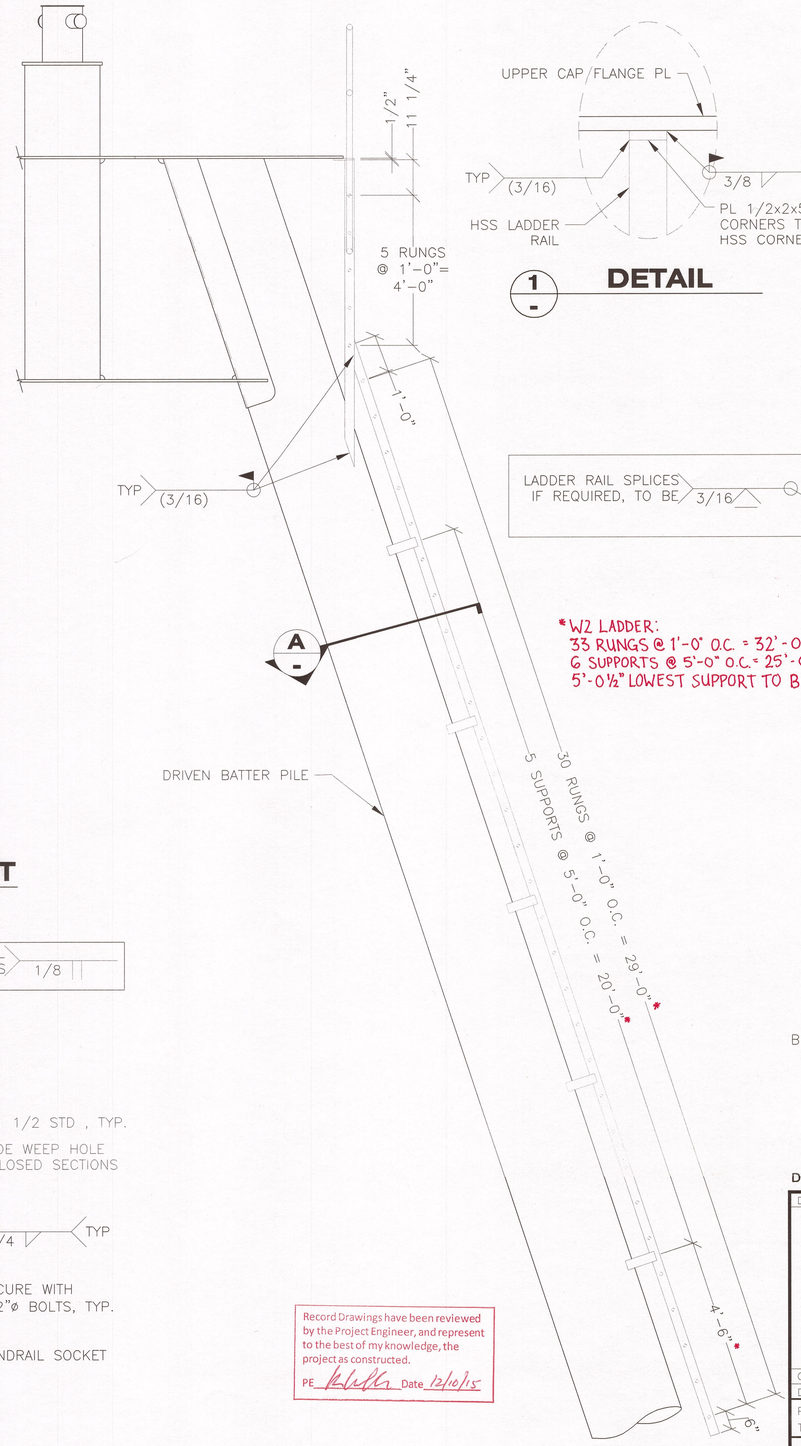

1 - DETAIL

LADDER RAIL SPLICES IF REQUIRED, TO BE 3/16

*W2 LADDER:
33 RUNGS @ 1'-0" O.C. = 32'-0"
6 SUPPORTS @ 5'-0" O.C. = 25'-0"
5'-0½" LOWEST SUPPORT TO BOTTOM OF LADDER

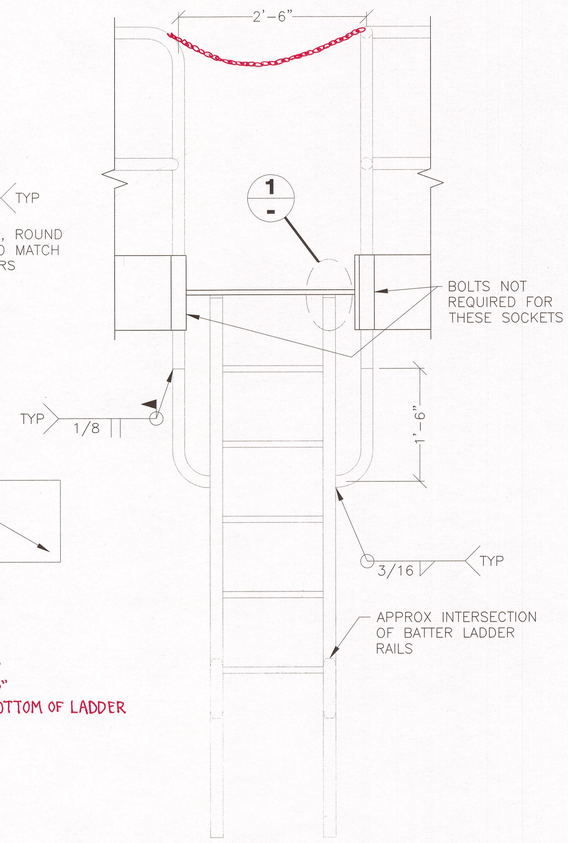

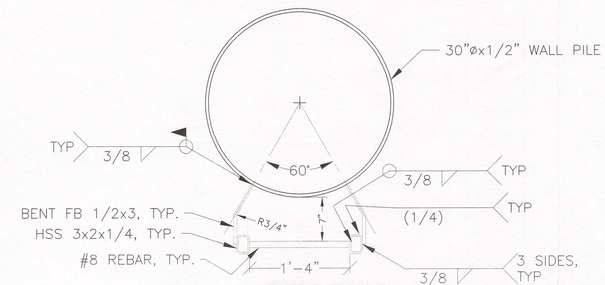

A - SECTION

DRAWING SCALES ARE FOR FULL-SIZE SHEETS. IF NO SCALE SHOWN, USE DIMENSIONS.

Record Drawings have been reviewed by the Project Engineer, and represent to the best of my knowledge, the project as constructed.
PE _____ Date 12/10/15

LADDER ELEVATION

DESIGNED BY: D. LOWELL
STATE OF ALASKA · DAVID H. LOWELL · CE-12614 · 49th · REGISTERED PROFESSIONAL ENGINEER
6/6/14
CHECKED BY: STAFF
DRAWN BY: STAFF
PATH: Q:\POW\67449\PLANSET\MF\30-37 - DOLPHIN E1-E3, W1 & ANODE DETS.DWG
TAB: 33 Friday, June 06, 2014 1:05:26 PM LOWELL, DAVID H (DOT)

STATE OF ALASKA
DEPARTMENT OF TRANSPORTATION & PUBLIC FACILITIES
SOUTHEAST REGION

CLARK BAY FERRY TERMINAL IMPROVEMENTS

HANDRAIL PLAN AND LADDER

REVISIONS NO.	DATE	DESCRIPTION	PROJECT DESIGNATION	YEAR	SHEET NO.	TOTAL SHEETS
			67449/0924019	2014	33	~~57~~

6 TYPE A PANELS
3 TYPE B PANELS
6 TYPE C PANELS

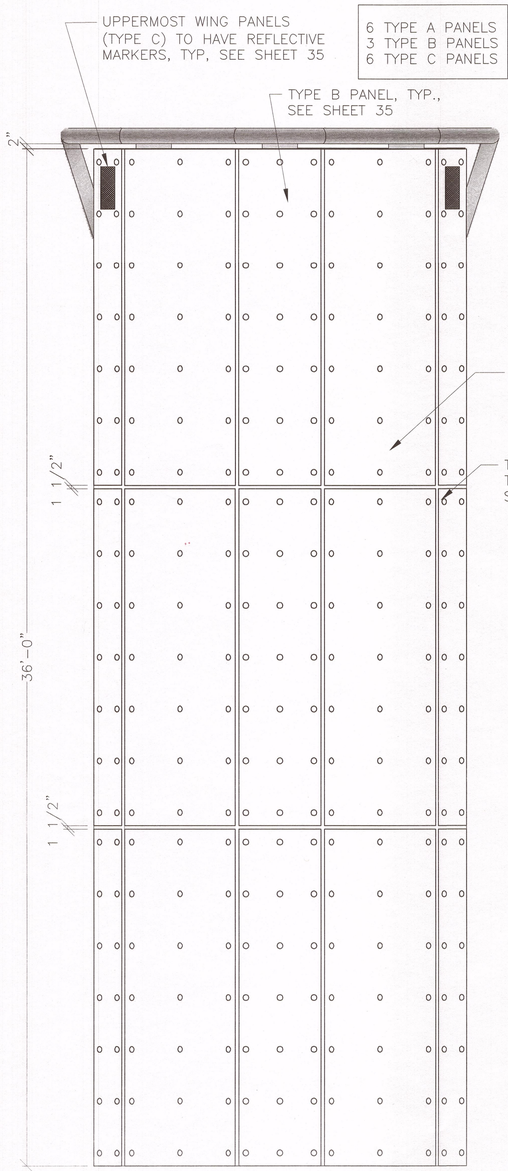

FRONT ELEVATION

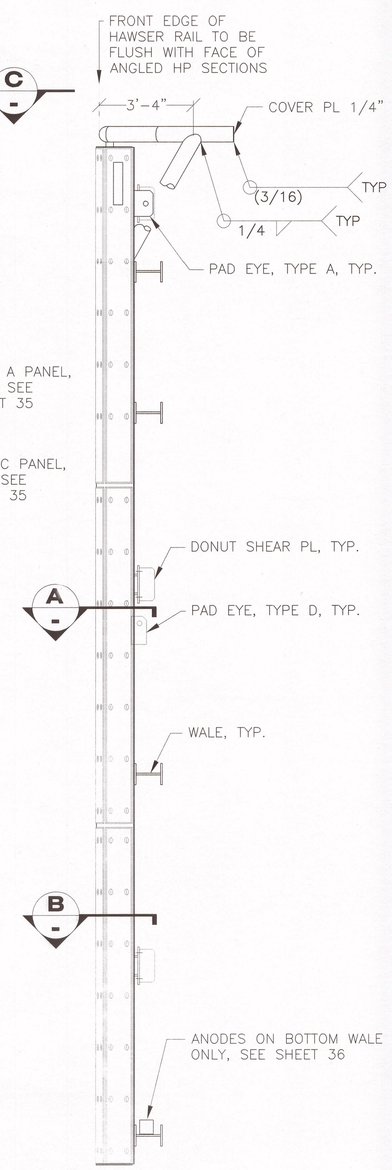

SIDE ELEVATION

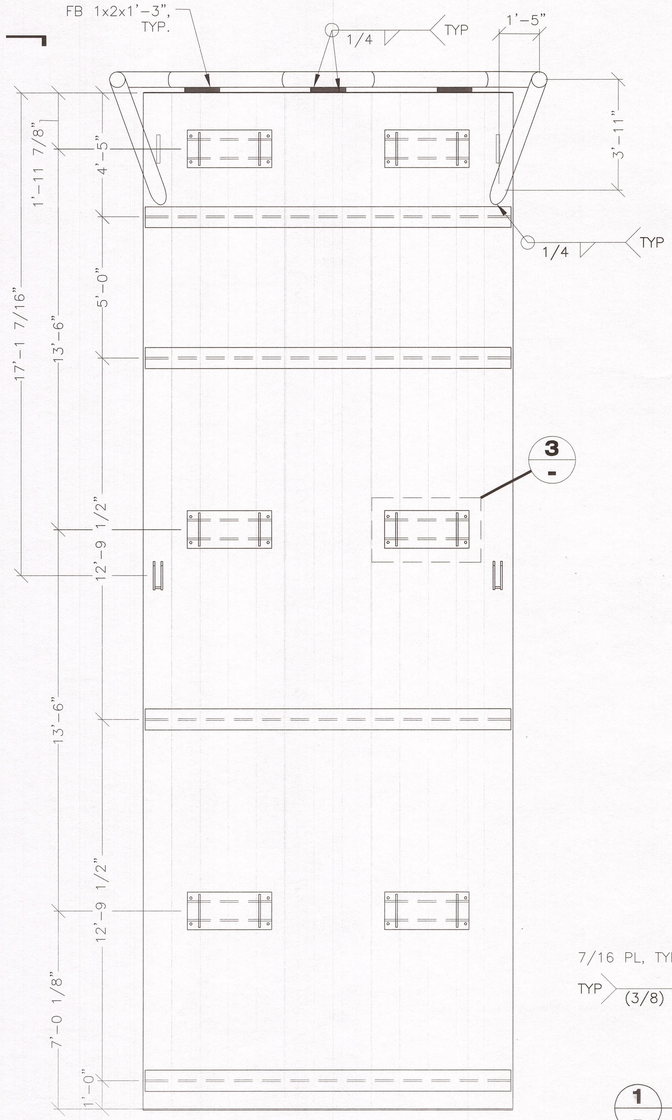

REAR ELEVATION

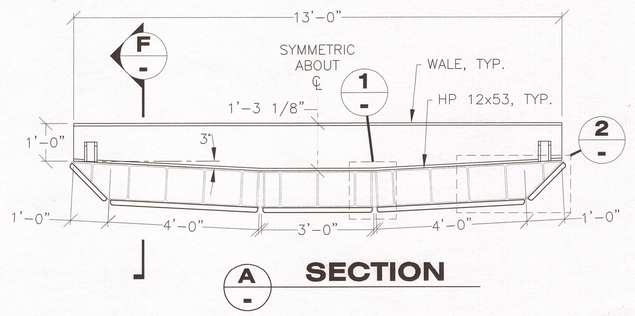

A SECTION

SYMMETRIC ABOUT ℄

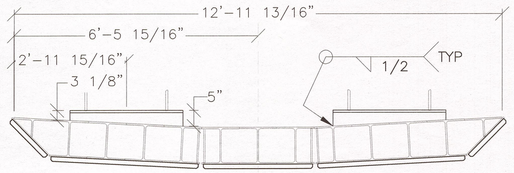

B SECTION

SYMMETRIC ABOUT ℄

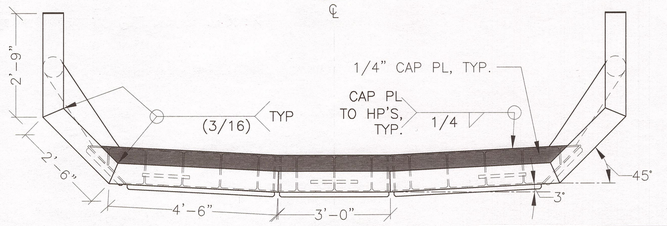

C SECTION
DOLPHINS E2 AND E3

ALL SECTIONS OF HAWSER RAIL TO BE PIPE 6 STD

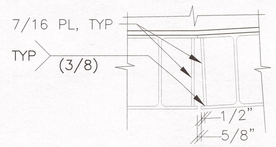

1 DETAIL

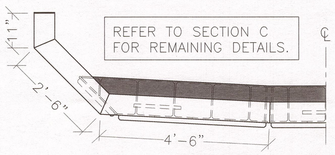

D SECTION
DOLPHIN E1. DOLPHIN W1
DETAILS ARE OPPOSITE HAND.

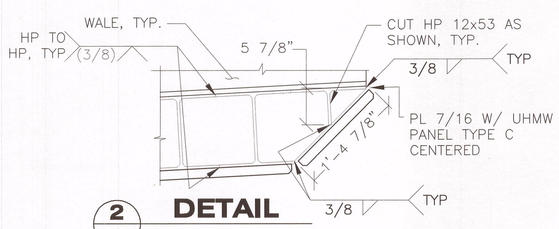

2 DETAIL

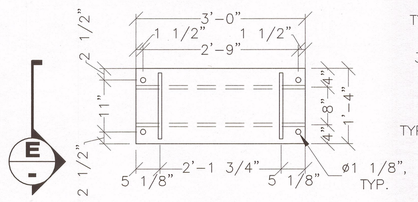

3 DETAIL
(HP'S NOT SHOWN FOR CLARITY)

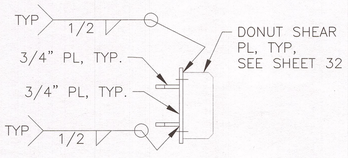

E SECTION

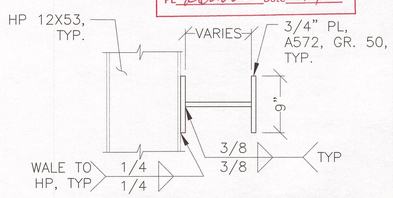

F WALE SECTION

Record Drawings have been reviewed by the Project Engineer, and represent to the best of my knowledge, the project as constructed.
PE K Lowell Date 12/10/15

DRAWING SCALES ARE FOR FULL-SIZE SHEETS. IF NO SCALE SHOWN, USE DIMENSIONS.

DESIGNED BY: D. LOWELL
DRAWN BY: STAFF
CHECKED BY: STAFF
6/6/14

STATE OF ALASKA
DEPARTMENT OF TRANSPORTATION & PUBLIC FACILITIES
SOUTHEAST REGION

CLARK BAY FERRY TERMINAL IMPROVEMENTS

FENDER PANEL FRAME BREASTING DOLPHIN

PATH: Q:\POW\67449\PLANSET\MF\30-37 – DOLPHIN E1-E3, W1 & ANODE DETS.DWG
TAB: 34 Friday, June 06, 2014 1:07:06 PM LOWELL, DAVID H (DOT)

REVISIONS NO.	DATE	DESCRIPTION	PROJECT DESIGNATION	YEAR	SHEET NO.	TOTAL SHEETS
			67449/0924019	2014	34	~~57~~

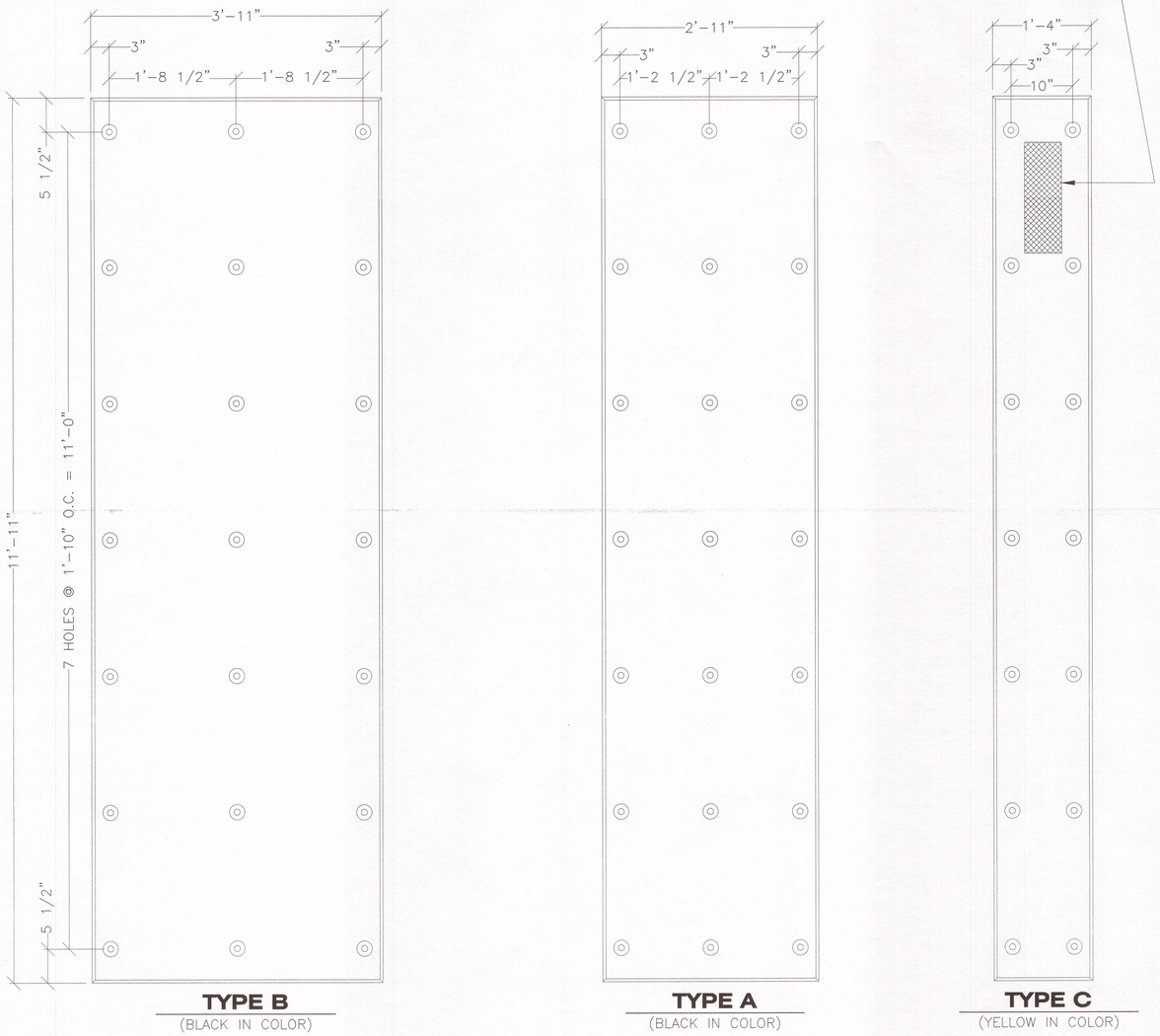

TYPE B
(BLACK IN COLOR)

TYPE A
(BLACK IN COLOR)

TYPE C
(YELLOW IN COLOR)

1 1/2" UHMW FENDER PANELS

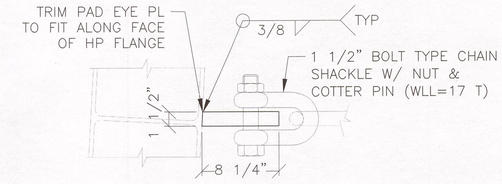

PLAN

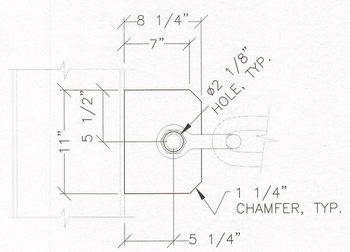

ELEVATION
PAD EYE TYPE A

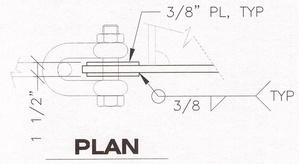

PLAN

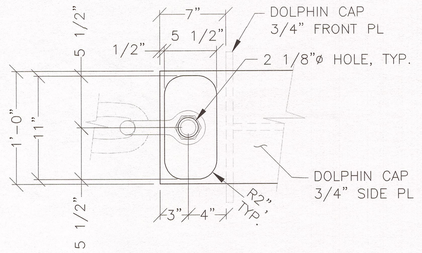

ELEVATION
PAD EYE TYPE B

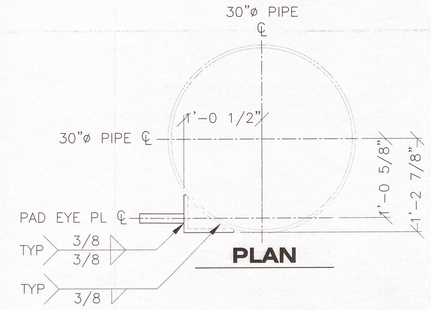

PLAN

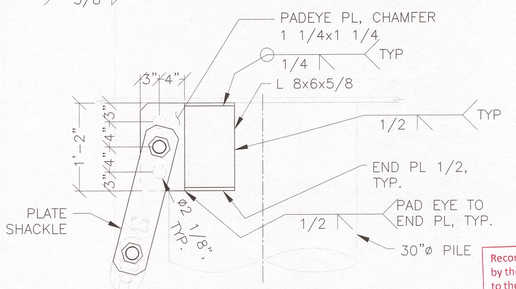

ELEVATION
PAD EYE TYPE C

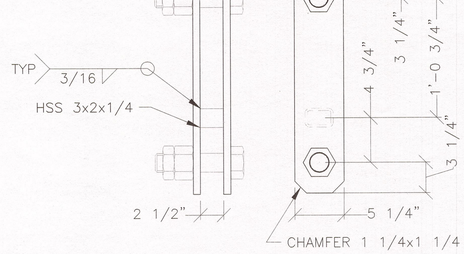

PLATE SHACKLE DETAIL

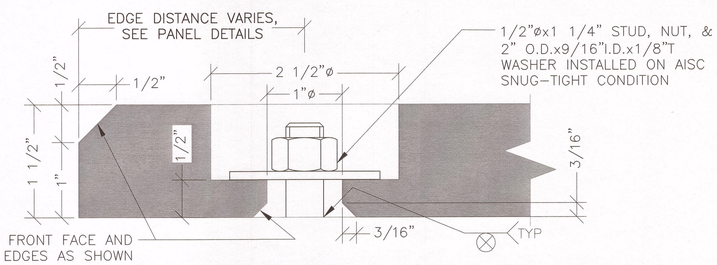

UHMW FASTENER HOLES & EDGE CHAMFERS

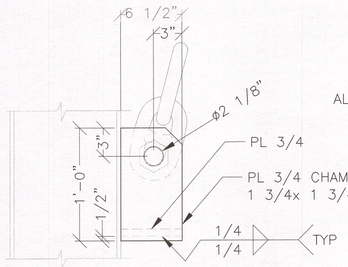

ELEVATION
PAD EYE TYPE D

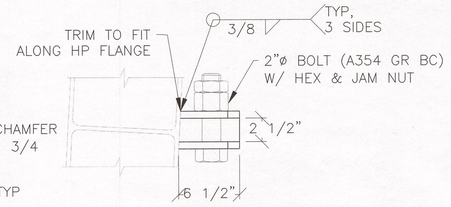

PLAN
PAD EYE TYPE D

Record Drawings have been reviewed by the Project Engineer, and represent to the best of my knowledge, the project as constructed.
PE [signature] Date 12/10/15

DRAWING SCALES ARE FOR FULL-SIZE SHEETS. IF NO SCALE SHOWN, USE DIMENSIONS.

DESIGNED BY: D. LOWELL
STATE OF ALASKA 49th DAVID H. LOWELL CE-12614 REGISTERED PROFESSIONAL ENGINEER
6/6/14
CHECKED BY: STAFF
DRAWN BY: STAFF
PATH: Q:\POW\67449\PLANSET\MF\30-37 - DOLPHIN E1-E3, W1 & ANODE DETS.DWG
TAB: 35 Friday, June 06, 2014 1:07:54 PM LOWELL, DAVID H (DOT)

STATE OF ALASKA
DEPARTMENT OF TRANSPORTATION & PUBLIC FACILITIES
SOUTHEAST REGION

CLARK BAY FERRY TERMINAL IMPROVEMENTS

UHMW AND PAD EYE DETAILS

REVISIONS NO.	DATE	DESCRIPTION	PROJECT DESIGNATION	YEAR	SHEET NO.	TOTAL SHEETS
			67449/0924019	2014	35	~~57~~

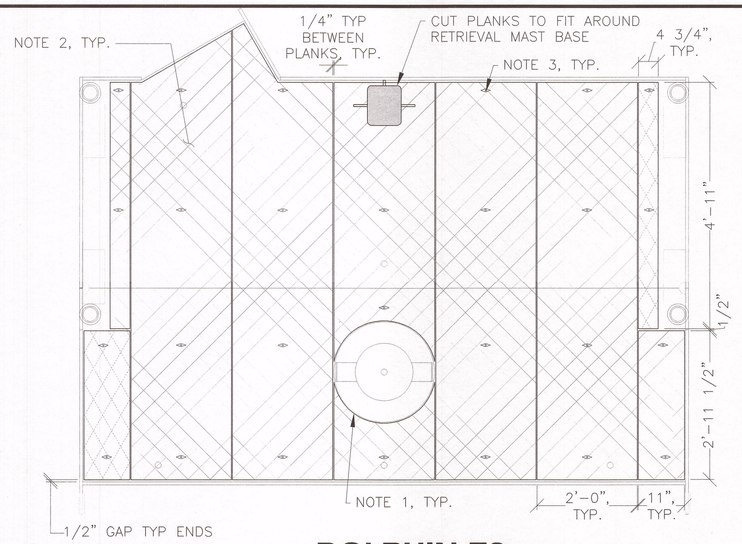

DOLPHIN E2
DECK SURFACE

DOLPHIN E3 DECK DETAILS SIMILAR EXCEPT WHERE NOTED

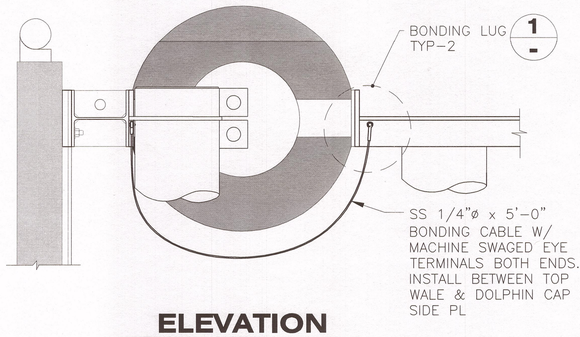

ELEVATION
FENDER PANEL BONDING CABLE

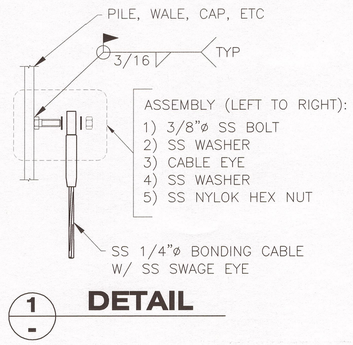

1/- **DETAIL**

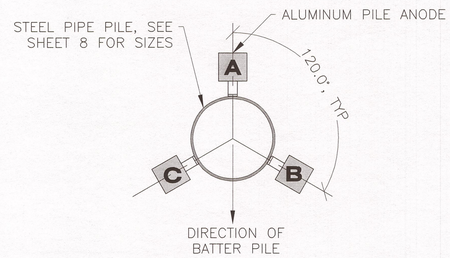

PLAN

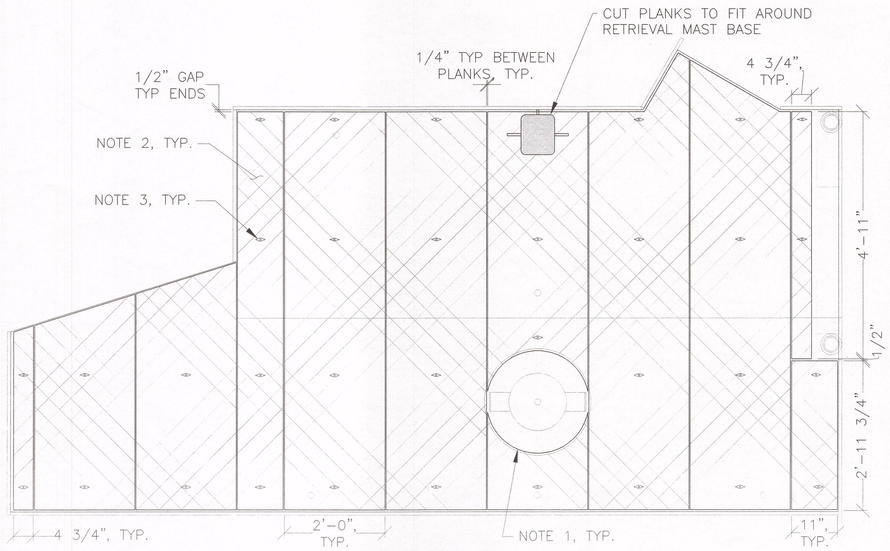

DOLPHIN E1
DECK SURFACE

DOLPHIN W1 DECK DETAILS OPPOSITE HAND ARE SIMILAR

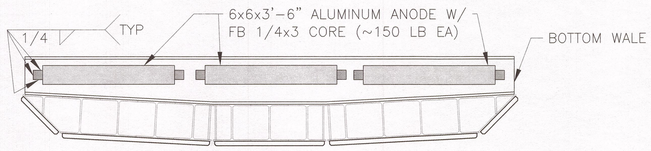

FENDER PANEL ANODES

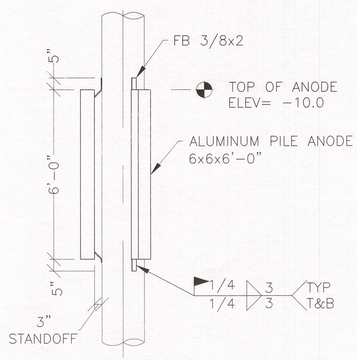

ELEVATION
PILE ANODES

PILE ANODE NOTES:
1. INSTALL ANODES ON ALL VERTICAL PILES.
2. OMIT PILE ANODE "A" AT FLOAT RESTRAINT DOLPHINS.

DECK SURFACE NOTES:
1. PROVIDE 2" DEEP BAND FOR CIRCULAR CUT, WITH 1/4" MIN. CLEARANCE BETWEEN BASE OF BOLLARD AND GRATING
2. SUPPLY PRE-GALVANIZED STEEL 14 GAUGE SERRATED 10-DIAMOND GRIP STRUT OR EQUIVALENT SURFACE IN 24", 11", 4-3/4"" WIDE AND 2" DEEP PLANKS AS SHOWN.
3. INSTALL ANCHORING DEVICE CLIPS USING STUDS WELDED TO THE DECK PLATE OR AS RECOMMENDED BY MANUFACTURER, TYP.

Record Drawings have been reviewed by the Project Engineer, and represent to the best of my knowledge, the project as constructed.
PE _____ Date 12/10/15

DRAWING SCALES ARE FOR FULL-SIZE SHEETS. IF NO SCALE SHOWN, USE DIMENSIONS.

DESIGNED BY: D. LOWELL
STATE OF ALASKA · 49th · DAVID H. LOWELL · CE-12614 · REGISTERED PROFESSIONAL ENGINEER
6/12/14
CHECKED BY: STAFF
DRAWN BY: STAFF

STATE OF ALASKA
DEPARTMENT OF TRANSPORTATION & PUBLIC FACILITIES
SOUTHEAST REGION

CLARK BAY FERRY TERMINAL IMPROVEMENTS
ANODE AND DECK SURFACE DETAILS

PATH: Q:\POW\67449\PLANSET\MF\30-37 - DOLPHIN E1-E3, W1 & ANODE DETS.DWG
TAB: 36 Thursday, June 12, 2014 12:32:14 PM LOWELL, DAVID H (DOT)

REVISIONS NO.	DATE	DESCRIPTION

PROJECT DESIGNATION	YEAR	SHEET NO.	TOTAL SHEETS
67449/0924019	2014	36	~~57~~

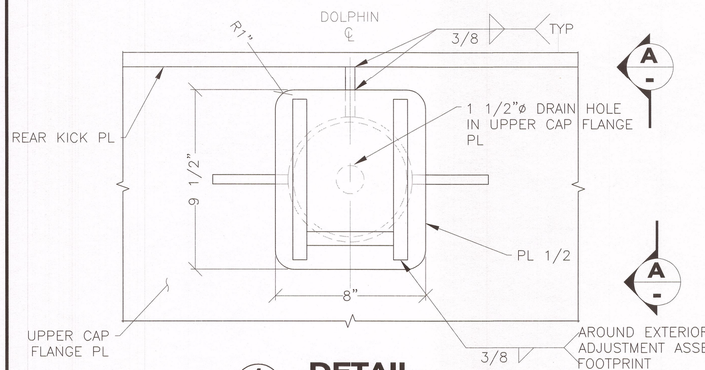

1/37 DETAIL

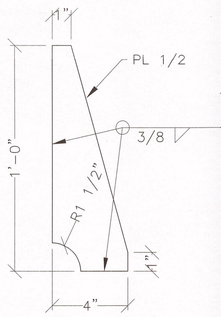

2/- DETAIL

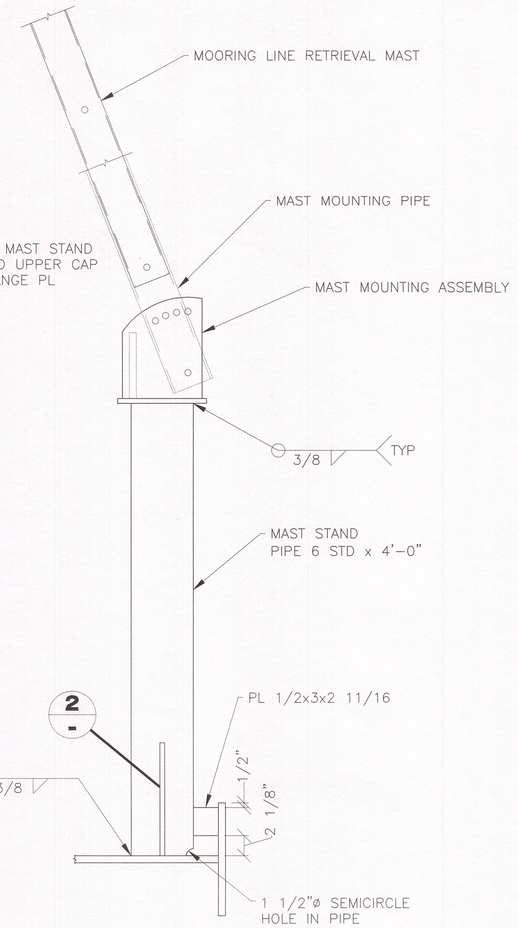

A/- ELEVATION

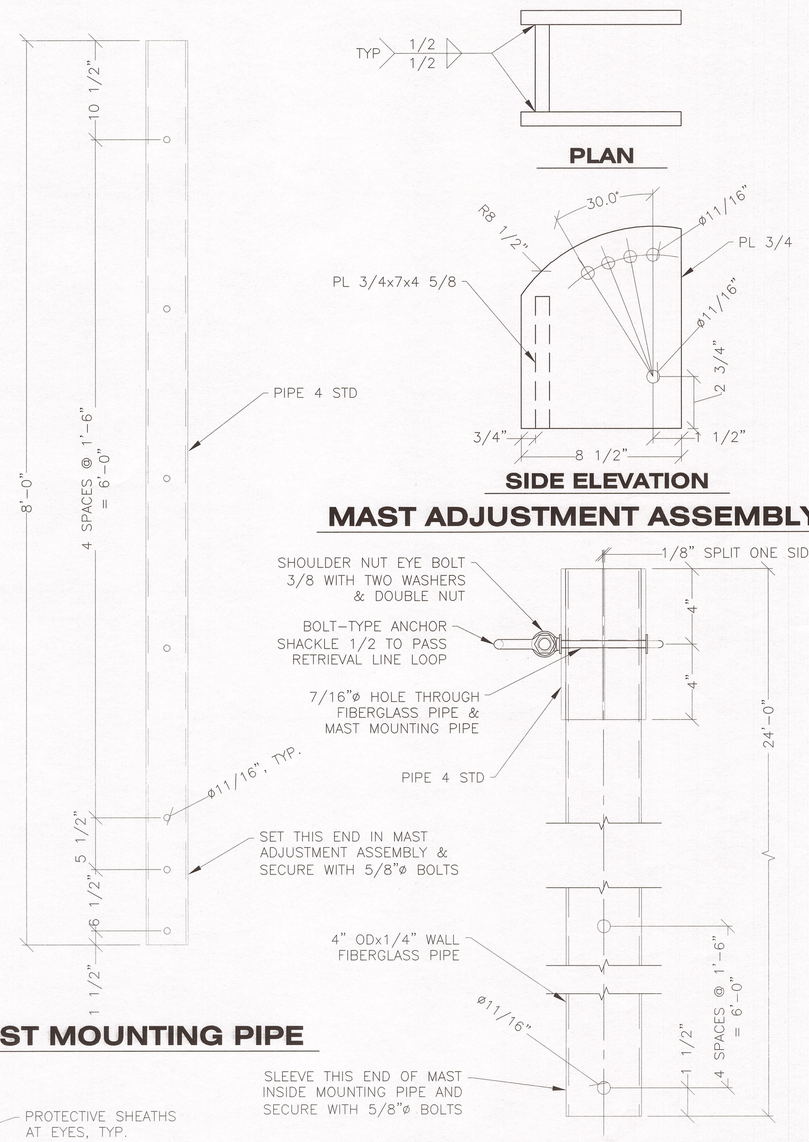

MAST MOUNTING PIPE

PLAN

SIDE ELEVATION

MAST ADJUSTMENT ASSEMBLY

MOORING LINE RETRIEVAL MAST

RETRIEVAL & MOORING LINES NOT DRAWN TO SCALE. LADDER, HANDRAIL, GANGWAY NOT SHOWN FOR CLARITY.

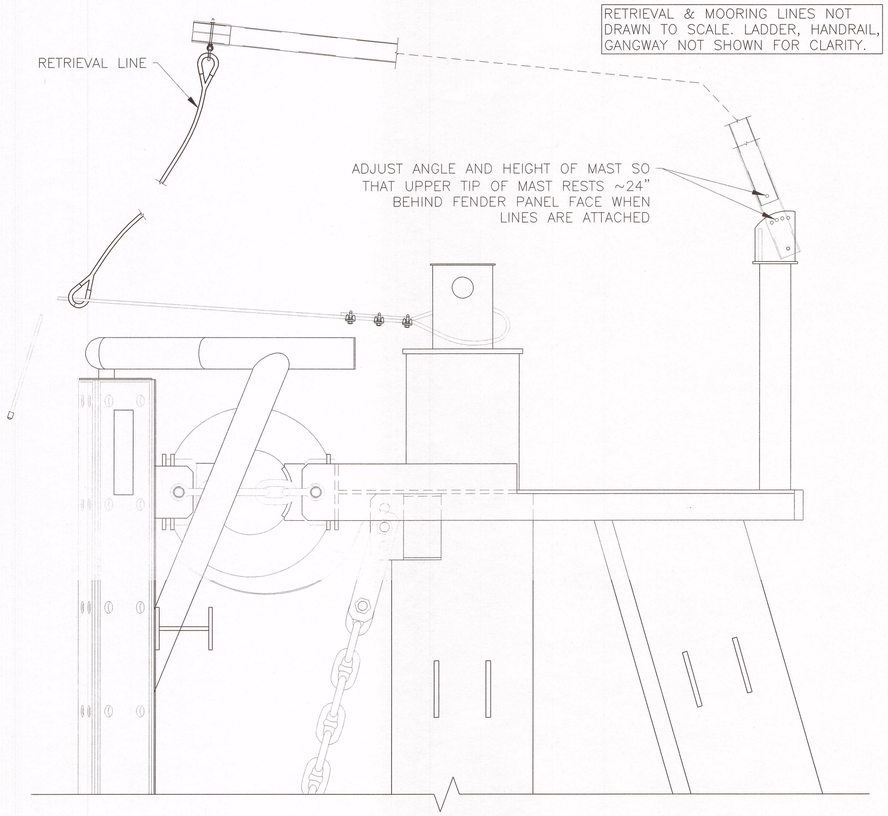

SIDE ELEVATION
MOORING LINE RETRIEVAL ASSEMBLY

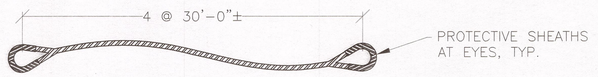

RETRIEVAL LINE
3/4"Ø 3-STRAND POLYLINE

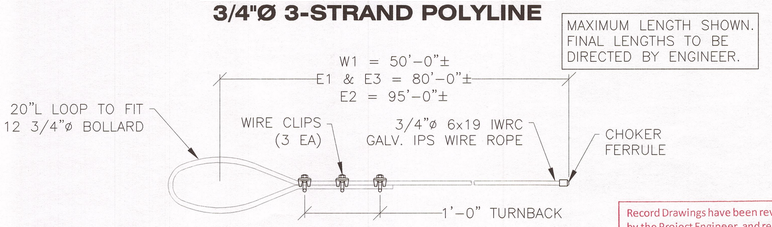

MOORING CABLE ASSEMBLY

Record Drawings have been reviewed by the Project Engineer, and represent to the best of my knowledge, the project as constructed.
PE _____ Date 12/14/15

DRAWING SCALES ARE FOR FULL-SIZE SHEETS. IF NO SCALE SHOWN, USE DIMENSIONS.

DESIGNED BY: D. LOWELL	STATE OF ALASKA DEPARTMENT OF TRANSPORTATION & PUBLIC FACILITIES SOUTHEAST REGION
STATE OF ALASKA · DAVID H. LOWELL · CE-12614 · 49th · PROFESSIONAL ENGINEER · 6/16/14	**CLARK BAY FERRY TERMINAL IMPROVEMENTS** **MOORING LINE RETRIEVAL MAST**
CHECKED BY: STAFF	
DRAWN BY: STAFF	
PATH: Q:\POW\67449\PLANSET\MF\30-37 – DOLPHIN E1-E3, W1 & ANODE DETS.DWG TAB: 37 Monday, June 16, 2014 11:02:24 AM LOWELL, DAVID H (DOT)	

REVISIONS NO.	DATE	DESCRIPTION	PROJECT DESIGNATION	YEAR	SHEET NO.	TOTAL SHEETS
			67449/0924019	2014	37	~~57~~

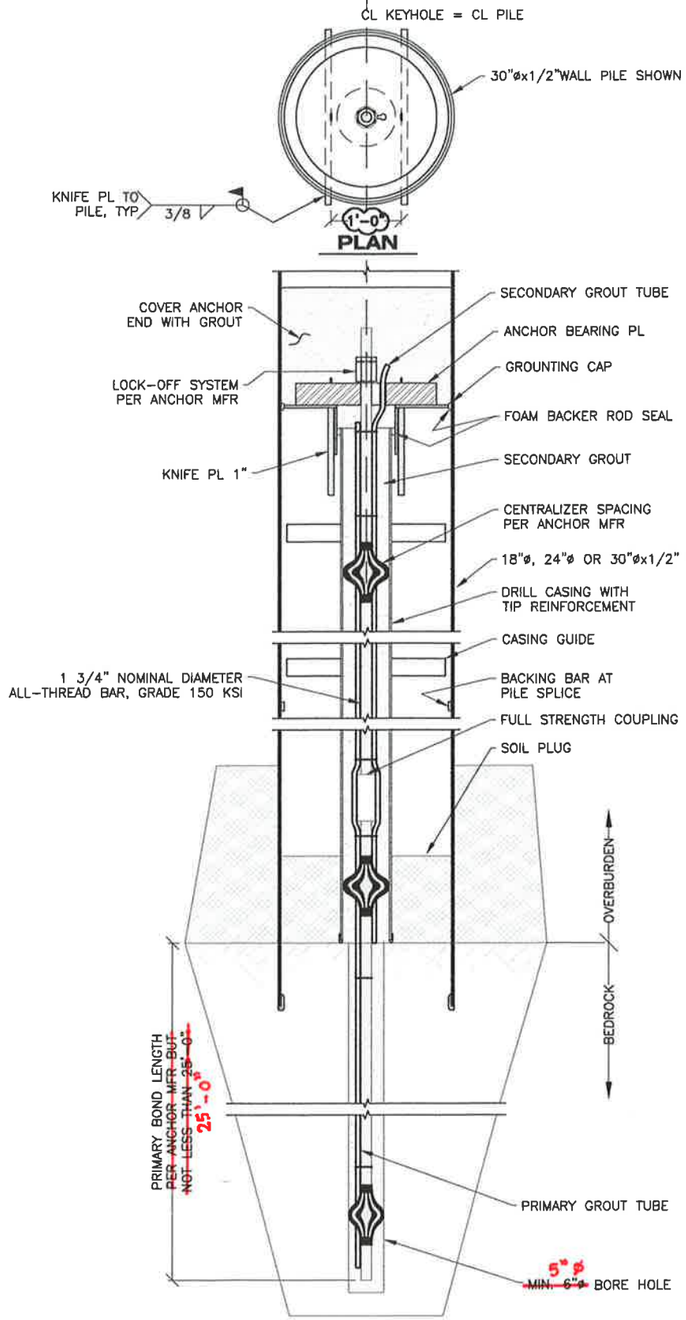

TYPICAL SECTION
TENSION PILE ANCHOR

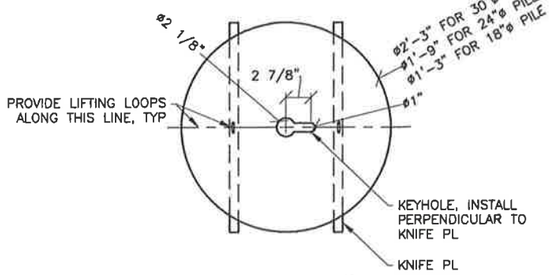

ANCHOR BEARING PL
PL 3

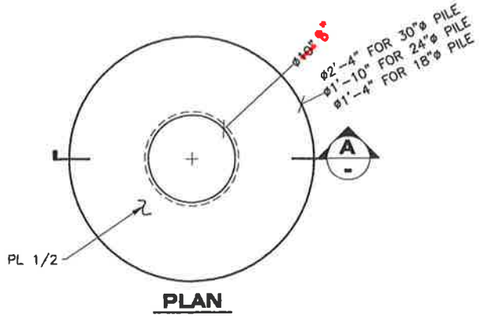

PLAN

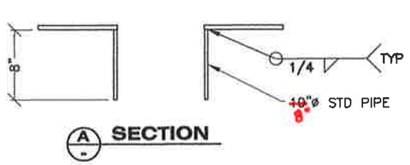

GROUTING CAP

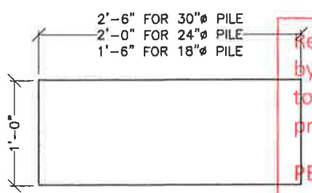

ANCHOR KNIFE PLATE
PL 1

Record Drawings have been reviewed by the Project Engineer, and represent to the best of my knowledge, the project as constructed.

PE [signature] Date 12/10/15

SUMMARY OF CHANGES:
1. REVISED ROCK ANCHOR NOTES, SPECIFICALLY GENERAL NOTE 2) AND INSTALLATION PROCEDURE NOTE 7).
2. CHANGED KNIFE PLATE SPACING.

ROCK ANCHOR NOTES

GENERAL

1) REFER TO SECTION 518 OF THE SPECIAL PROVISIONS FOR ADDITIONAL TENSION PILE REQUIREMENTS.
2) ANCHORING DETAILS AND METHODS SHOWN MAY BE MODIFIED AT THE REQUEST OF THE CONTRACTOR -- IF APPROVED BY THE ENGINEER IN ADVANCE OF CONSTRUCTION.

MATERIALS & SPECIFICATIONS

1) ANCHOR RODS SHALL BE ALL-THREAD BAR PER ASTM A-722 & ASTM A-615, GRADE 150 KSI AS MANUFACTURED BY WILLIAMS FORM ENGINEERING CORPORATION OR APPROVED EQUAL. COUPLINGS SHALL BE CAPABLE OF DEVELOPING THE FULL TENSILE STRENGTH OF THE BAR. ANCHOR RODS SHALL BE EQUIPPED WITH POLYETHYLENE CENTRALIZERS TO ENSURE THE ANCHOR ROD IS CENTERED IN THE CASING AND DRILLED HOLE.
2) STEEL ANCHOR BEARING AND KNIFE PLATES SHALL BE ASTM A572, GRADE 50.
3) PRIMARY AND SECONDARY GROUT MIXTURES SHALL BE DESIGNED BY THE CONTRACTOR IN ACCORDANCE WITH RECOMMENDATIONS PROVIDED BY THE ANCHOR ROD SYSTEM MANUFACTURER. SUBMIT GROUT MIXTURE DESIGNS TO THE ENGINEER FOR APPROVAL PRIOR TO START OF WORK. ALTERNATELY CONTRACTOR MAY USE PRE-MIXED, PRE-PACKAGED GROUT.
4) PRIMARY AND SECONDARY GROUT TUBE SYSTEMS SHALL BE DESIGNED BY THE CONTRACTOR IN ACCORDANCE WITH THE ANCHOR ROD MANUFACTURERS RECOMMENDATIONS FOR THE SELECTED GROUT MIXTURE AND GROUT PUMP.

INSTALLATION PROCEDURE

1) DRIVE PILES TO PRACTICAL REFUSAL AND SEAT ALL PILES INTO COMPETENT BEDROCK. AFFIX CAP TO PILES.
2) DRIVE CASING TO SURFACE OF BEDROCK.
3) DRILL THROUGH CASING AND INTO BEDROCK TO THE APPROVED DEPTH. CLEAN HOLE BY FLUSHING WITH WATER AND AIR.
4) INSTALL KNIFE PLATE SUPPORTS AND GROUTING CAP.
5) PLACE ANCHOR ROD WITH PRIMARY AND SECONDARY GROUT TUBES ATTACHED INTO CASING/DRILLED HOLE.
6) INJECT PRIMARY GROUT FROM THE BOTTOM OF THE HOLE TO THE TOP TO ENSURE COMPLETE COVERAGE. GROUT TUBE SHALL REMAIN FIXED TO THE ANCHOR AND NOT WITHDRAWN DURING GROUTING. MEASURE GROUT VOLUME TO ENSURE ANCHOR IS COVERED FOR THE DESIGN PRIMARY BOND LENGTH. ALLOW GROUT TO CURE UNDISTURBED TO THE SPECIFIED TEST STRENGTH.
7) PLACE ANCHOR BEARING PLATE AND CONDUCT PERFORMANCE OR PROOF TESTS IN ACCORDANCE WITH SECTION 518 OF THE SPECIAL PROVISIONS. THE TEST LOAD USED IN THE TEST PROCEDURE SHALL BE THE ULTIMATE UPLIFT CAPACITY SHOWN IN THE PILE DATA TABLE. AT THE COMPLETION OF TESTING, REDUCE TENSION TO THE LOCK-OFF LOAD AND TRANSFER LOAD TO THE BEARING PLATE BY TIGHTENING THE NUT. THE LOCK-OFF LOAD SHALL BE TAKEN AS 0.60 OF THE ULTIMATE UPLIFT CAPACITY SHOWN IN THE PILE DATA TABLE.
8) AFTER ANCHOR HAS BEEN ACCEPTED BY THE ENGINEER, PLACE SECONDARY GROUT AND ANCHORAGE GROUT OR CONCRETE COVER.

DRAWING SCALES ARE FOR FULL-SIZE SHEETS. IF NO SCALE SHOWN, USE DIMENSIONS.

DESIGNED BY: D. LOWELL
STATE OF ALASKA - DAVID H. LOWELL - CE-12614 - 49th - REGISTERED PROFESSIONAL ENGINEER
10/20/14
CHECKED BY: STAFF
DRAWN BY: STAFF

STATE OF ALASKA
DEPARTMENT OF TRANSPORTATION & PUBLIC FACILITIES
SOUTHEAST REGION

CLARK BAY FERRY TERMINAL IMPROVEMENTS

TENSION PILE ANCHOR

PATH: O:\POW\67449\MF\CONSTRUCTION\FLOAT RESTRAINTS\38 - TENSION PILE ANCHOR_REV 10.20.14.D
TAB: 38 Monday, October 20, 2014 3:03:41 PM LOWELL, DAVID H (DOT)

REVISIONS NO.	DATE	DESCRIPTION
1	10.20.14	NOTE REVISION

PROJECT DESIGNATION	YEAR	SHEET NO.	TOTAL SHEETS
67449/0924019	2014	38	~~57~~

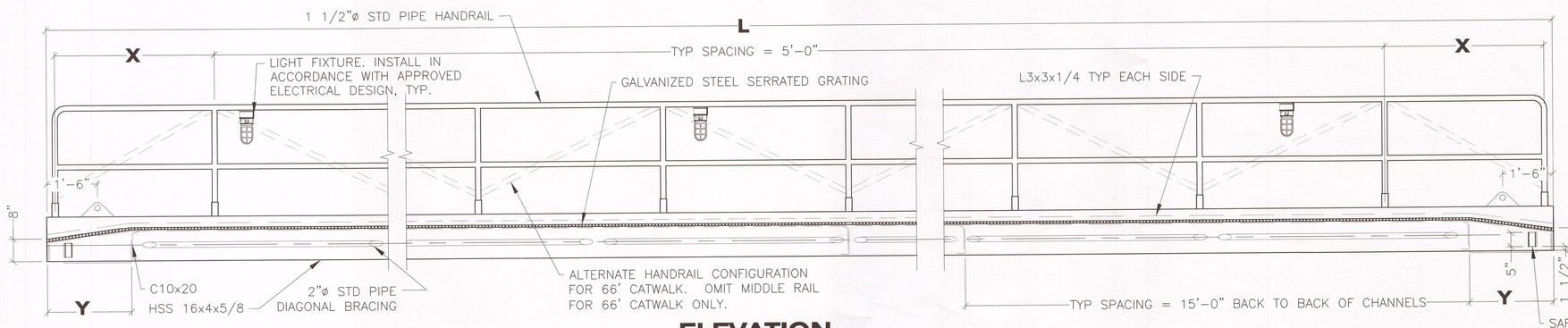

ELEVATION

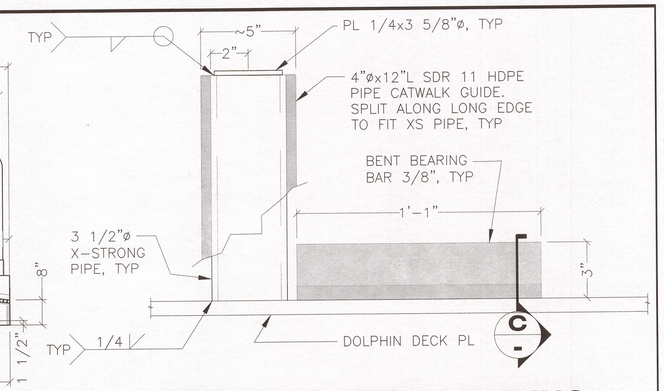

CATWALK GUIDE & BEARING

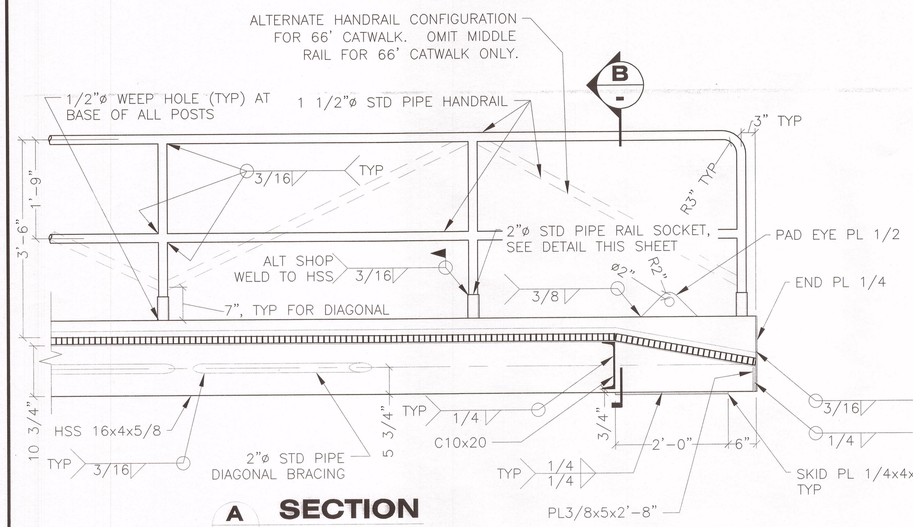

A - SECTION

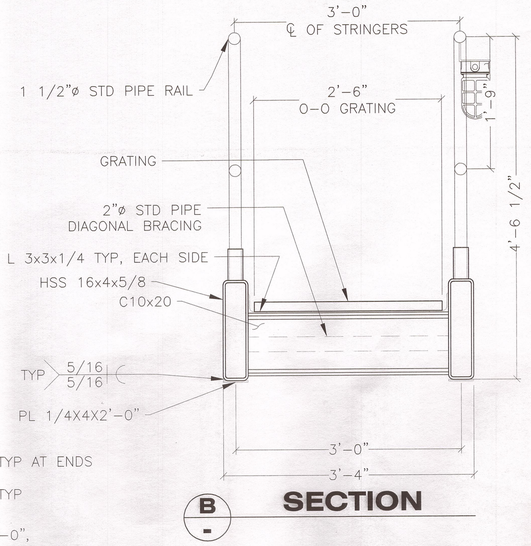

B - SECTION

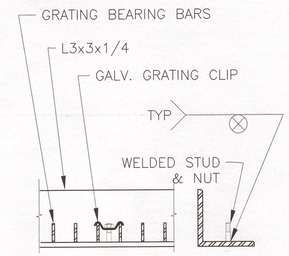

GRATE CLIP DETAIL

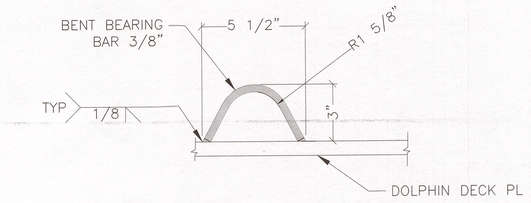

C - SECTION

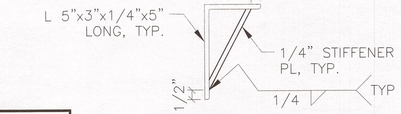

SAFETY STOP

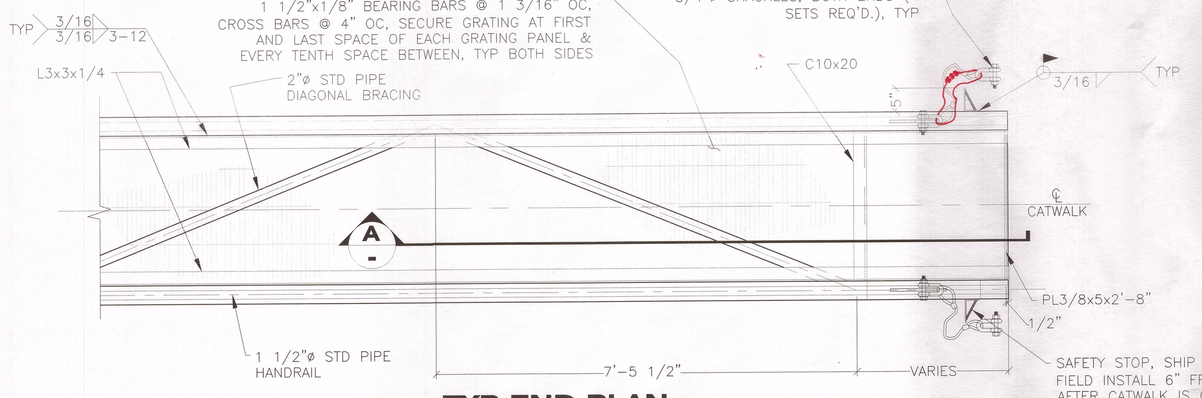

TYP END PLAN

DIMENSIONS SHOWN FROM CENTERLINE

CATWALK HANDRAIL TABLE				
L	SUPPORT	X	Y	# 5' SPCS
51'	E2 – E3	2'-9"	3'-0"	9
53'	E1 – E2	3'-9"	4'-0"	9
66'	W1 – W2	2'-9"	3'-0"	12

NOTES:
1. APPROXIMATE WEIGHT
   51' = 10,710 LBS
   53' = 11,130 LBS
   66' = 13,860 LBS
2. CAMBER AT MIDSPAN
   51'& 53' = 1 1/2"
   66' = 2 1/2"
3. DESIGN STANDARDS & LOADS:
   AASHTO PEDESTRIAN BRIDGES, 2009
   LIVE LOAD = 90 PSF

Record Drawings have been reviewed by the Project Engineer, and represent to the best of my knowledge, the project as constructed.
PE K Weller Date 12/10/15

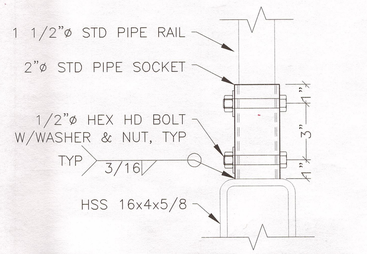

RAIL SOCKET DETAIL

DRAWING SCALES ARE FOR FULL-SIZE SHEETS. IF NO SCALE SHOWN, USE DIMENSIONS.

DESIGNED BY: D. LOWELL
STATE OF ALASKA
DAVID H. LOWELL
CE-12614
REGISTERED PROFESSIONAL ENGINEER
6/10/14
CHECKED BY: STAFF
DRAWN BY: STAFF

STATE OF ALASKA
DEPARTMENT OF TRANSPORTATION & PUBLIC FACILITIES
SOUTHEAST REGION

CLARK BAY FERRY TERMINAL IMPROVEMENTS

STEEL CATWALK

PATH: Q:\POW\67449\PLANSET\MF\39 – STEEL CATWALK.DWG
TAB: 39 Tuesday, June 10, 2014 3:44:01 PM LOWELL, DAVID H (DOT)

REVISIONS NO.	DATE	DESCRIPTION	PROJECT DESIGNATION	YEAR	SHEET NO.	TOTAL SHEETS
			67449/0924019	2014	39	~~57~~

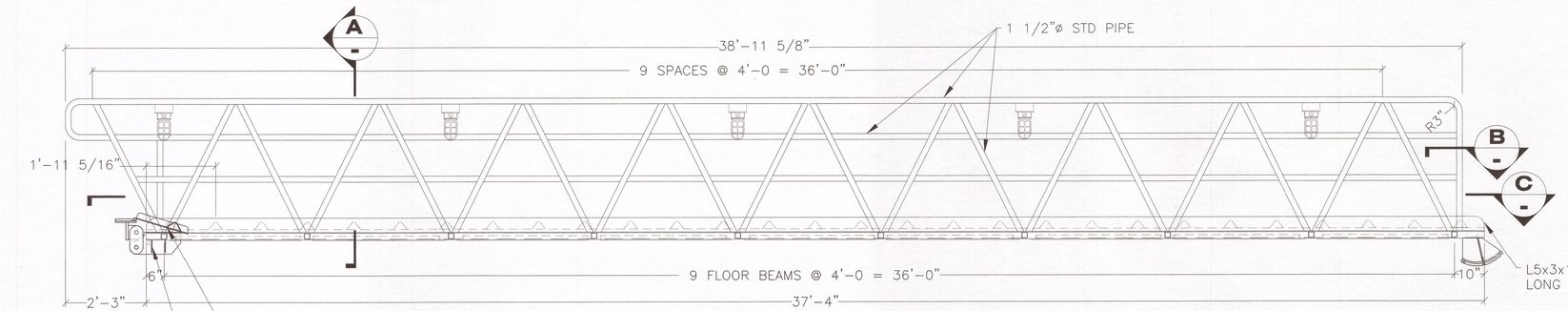

ELEVATION

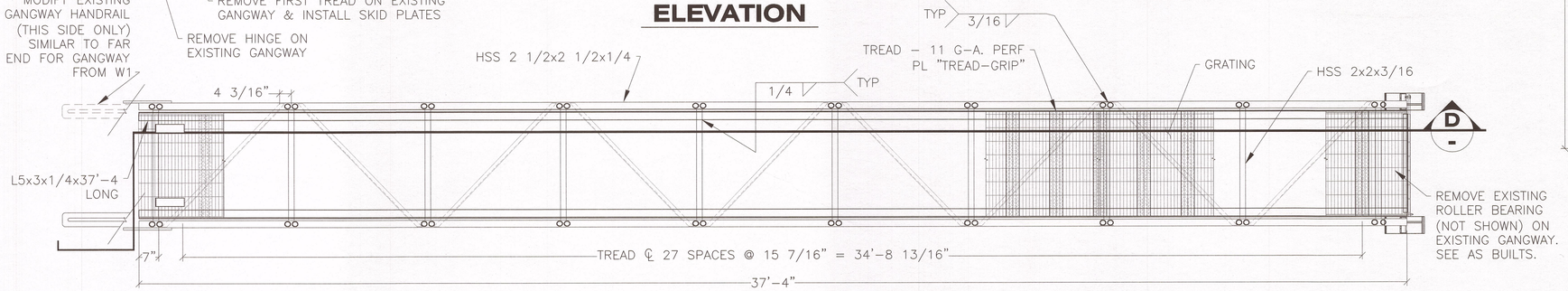

PLAN

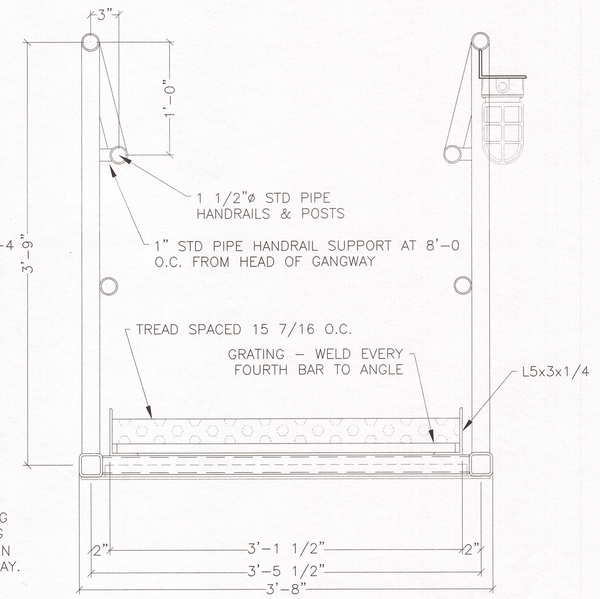

A SECTION

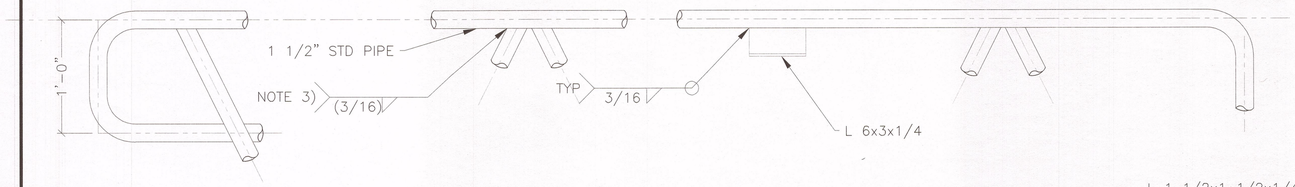

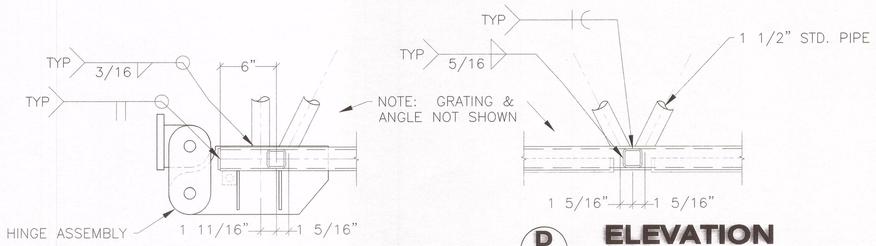

D ELEVATION

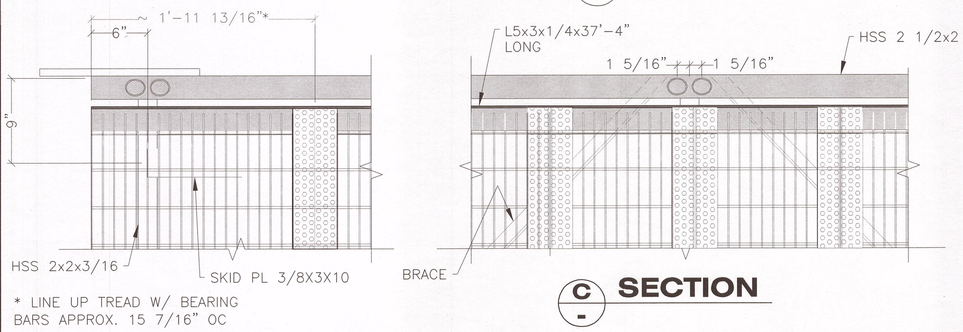

C SECTION

* LINE UP TREAD W/ BEARING BARS APPROX. 15 7/16" OC

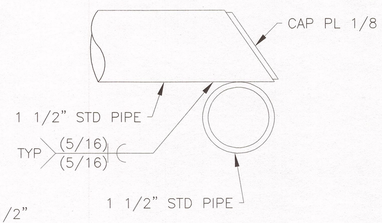

B SECTION

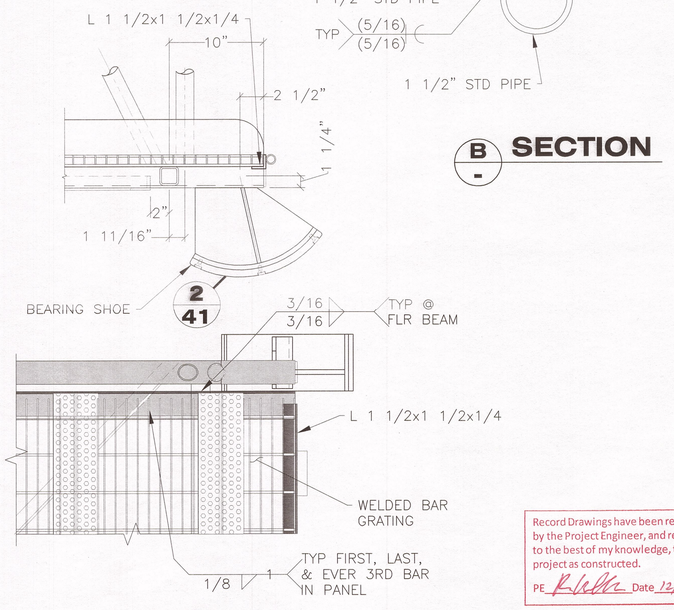

NOTES:

1. WELDED BAR GRATING: SERRATED 1"x1/8" BEARING BARS, 1 3/16" OC WITH REGULAR CROSS BARS 4" OC.

2. APPROXIMATE WEIGHT OF GANGWAY = 4,200 LBS.

3. THE TOE AND HEEL OF T-, K-, AND Y-CONNECTIONS WITH ENCLOSED ANGLES BETWEEN 120° AND 60° MAY USE FILLET WELDS, OTHERWISE CONNECTIONS SHALL BE PJP GROOVE WELDS. SHOP DRAWINGS SHALL SHOW THE WELD CONFIGURATION AND REQUIRED LEG SIZE TO ACCOUNT FOR JOINT GEOMETRY. REFER TO AWS D1.1 – 3.9.2 & 3.12.4.

4. PROVIDE LIGHT SUPPORTS ALONG ONE SIDE OF GANGWAY. FURNISH ONE GANGWAY AS SHOWN AND ONE GANGWAY OPPOSITE HAND.

5. WITH WRITTEN APPROVAL FROM THE ENGINEER, THE CONTRACTOR MAY SUBSTITUTE A MANUFACTURER-DESIGNED GANGWAY SYSTEM. THE ENGINEER RESPONSIBLE FOR THE DESIGN OF THE GANGWAY SHALL SUBMIT SEALED CALCULATIONS PREPARED BY A LICENSED PROFESSIONAL ENGINEER. THE GANGWAY SHALL BE DESIGNED IN ACCORDANCE WITH "LRFD GUIDE SPECIFICATIONS FOR THE DESIGN OF PEDESTRIAN BRIDGES" FOR LIVE LOAD = 65 PSF + 500 LBS (CONCURRENT), SNOW LOAD = 125 PSF, AND BASIC WIND SPEED V = 100 MPH.

~~6. FURNISH (4) 1/2" SCREW PIN ANCHOR SHACKLES AND (2) 1/2"x2' 0" GR 30 PROOF COIL SAFETY CHAINS PER GANGWAY. SECURE GANGWAY TO DOLPHIN CAP WITH CHAINS AND SHACKLES.~~

DRAWING SCALES ARE FOR FULL-SIZE SHEETS. IF NO SCALE SHOWN, USE DIMENSIONS.

DESIGNED BY: D. LOWELL
CHECKED BY: STAFF
DRAWN BY: STAFF

STATE OF ALASKA – DAVID H. LOWELL – CE-12614 – 49th – REGISTERED PROFESSIONAL ENGINEER
6/16/14

PATH: Q:\POW\67449\PLANSET\MF\40-41 – GANGWAY.DWG
TAB: 40 Monday, June 16, 2014 11:16:08 AM LOWELL, DAVID H (DOT)

Record Drawings have been reviewed by the Project Engineer, and represent to the best of my knowledge, the project as constructed.
PE R. Lowell Date 12/10/15

STATE OF ALASKA
DEPARTMENT OF TRANSPORTATION & PUBLIC FACILITIES
SOUTHEAST REGION

CLARK BAY FERRY TERMINAL IMPROVEMENTS

GANGWAY

REVISIONS NO.	DATE	DESCRIPTION	PROJECT DESIGNATION	YEAR	SHEET NO.	TOTAL SHEETS
			67449/0924019	2014	40	~~57~~ 61

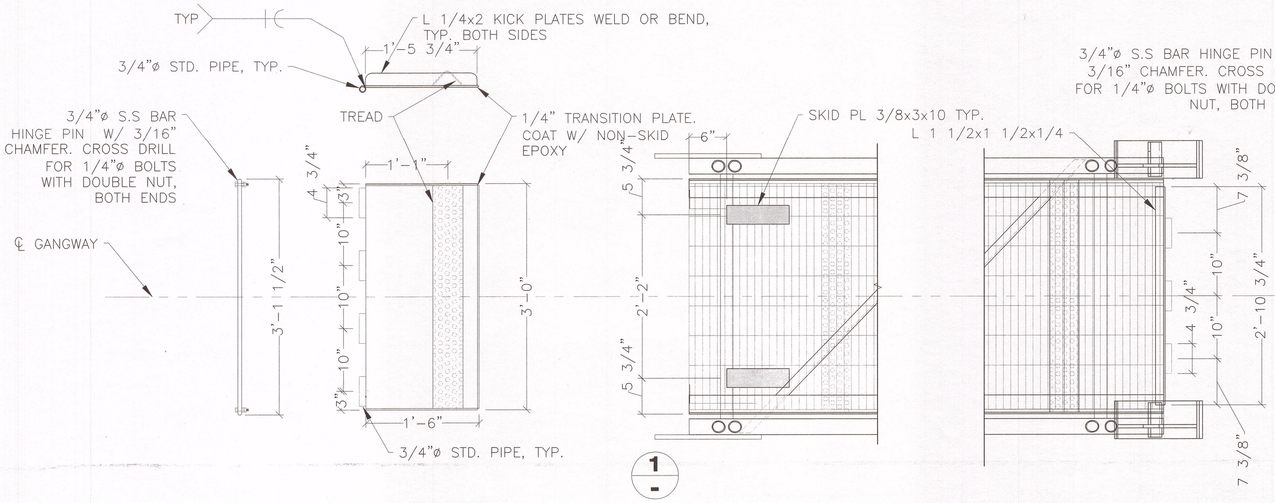

1 -

TRANSITION PLATE DETAILS

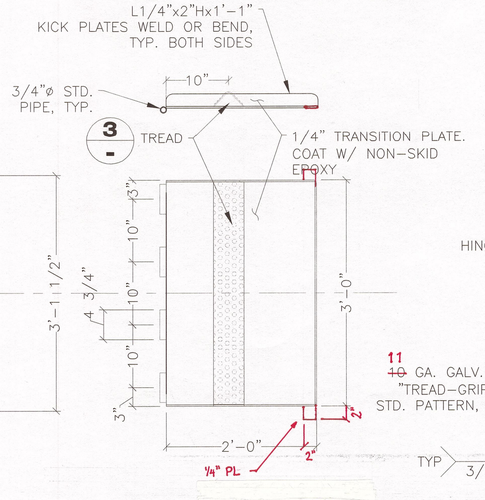

3 -

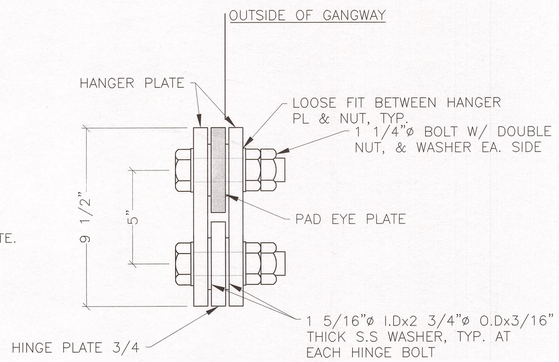

A -

SECTION

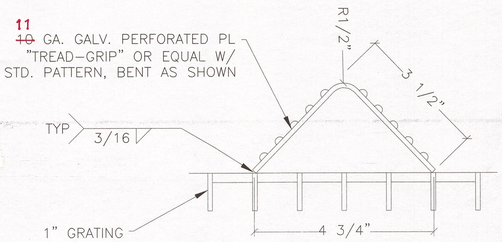

3 -

DETAIL

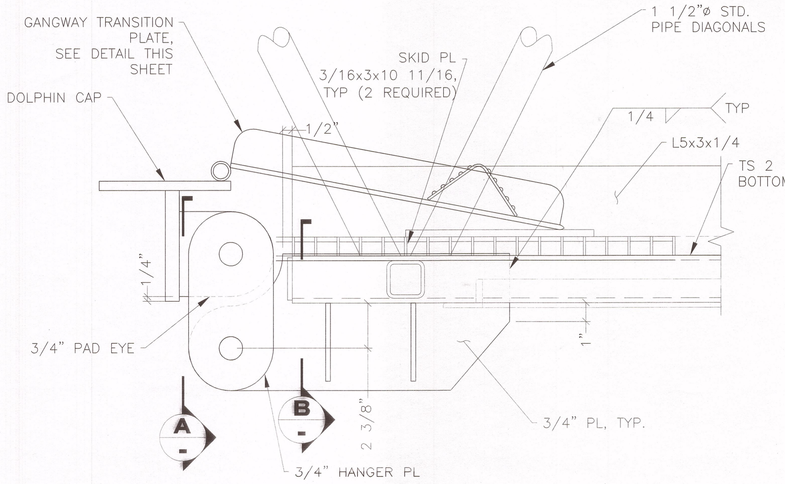

A - B -

GANGWAY ABUTMENT HINGE DETAIL

1 -

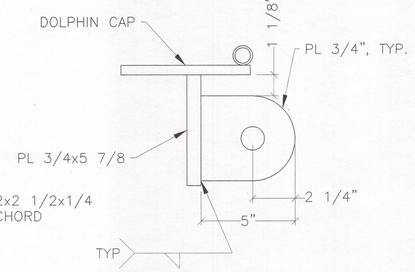

HINGE PAD EYE

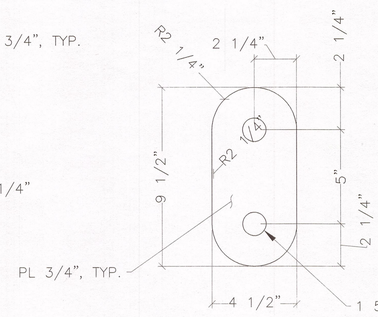

HINGE HANGER PLATE

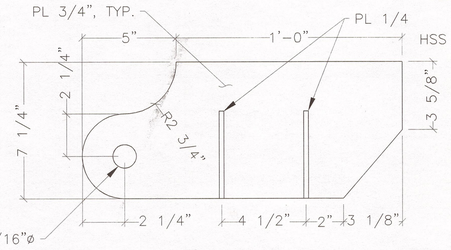

HINGE PLATE

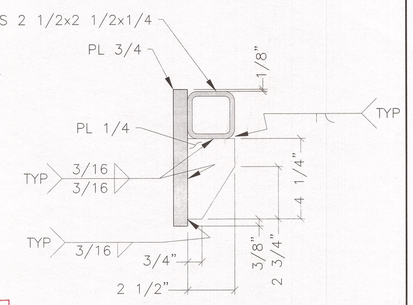

B -

SECTION

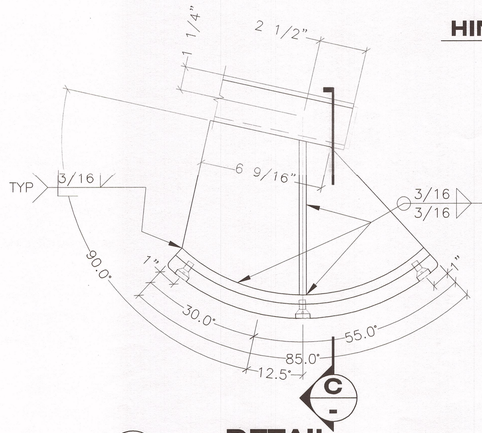

C -

DETAIL
BEARING SHOE

2 / 41

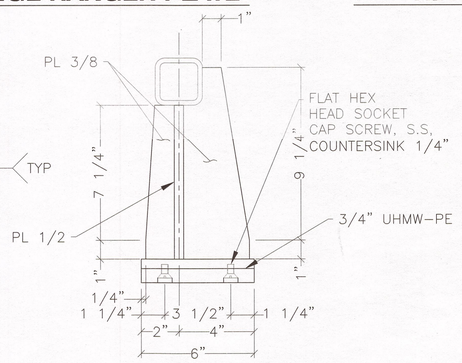

C -

SECTION

Record Drawings have been reviewed by the Project Engineer, and represent to the best of my knowledge, the project as constructed.
PE [signature] Date 12/10/15

DRAWING SCALES ARE FOR FULL-SIZE SHEETS. IF NO SCALE SHOWN, USE DIMENSIONS.

DESIGNED BY: D. LOWELL
STATE OF ALASKA · 49th · DAVID H. LOWELL · CE-12614 · REGISTERED PROFESSIONAL ENGINEER
6/6/14
CHECKED BY: STAFF
DRAWN BY: STAFF

STATE OF ALASKA
DEPARTMENT OF TRANSPORTATION & PUBLIC FACILITIES
SOUTHEAST REGION

CLARK BAY FERRY TERMINAL IMPROVEMENTS

GANGWAY HINGE & BEARING SHOE

PATH: Q:\POW\67449\PLANSET\MF\40-41 - GANGWAY.DWG
TAB: 41 Friday, June 06, 2014 3:08:26 PM LOWELL, DAVID H (DOT)

REVISIONS NO.	DATE	DESCRIPTION

PROJECT DESIGNATION	YEAR	SHEET NO.	TOTAL SHEETS
67449/0924019	2014	41	~~57~~ 61

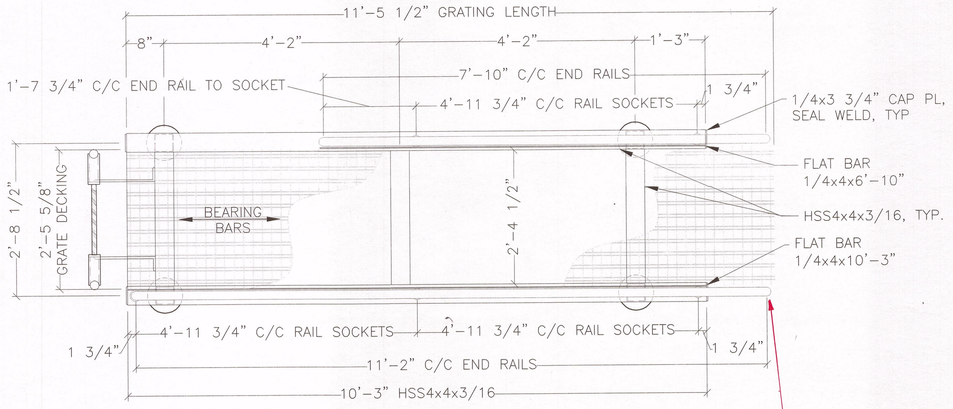

PLAN

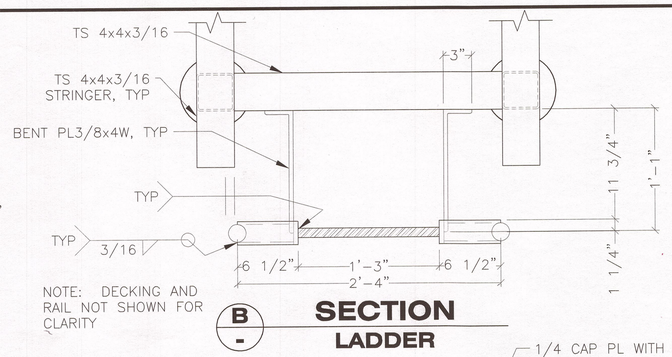

B/- **SECTION LADDER**

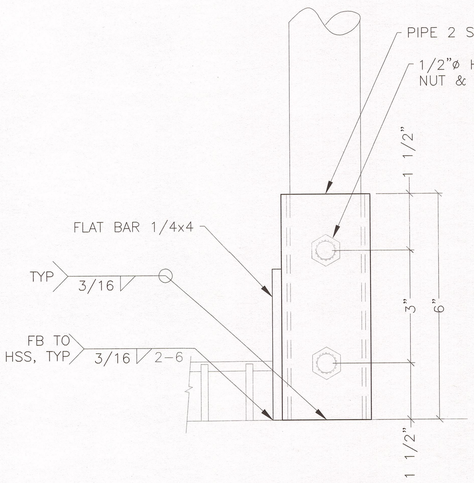

1/42 1/- **DETAIL HANDRAIL SOCKET**

A/- MODIFIED HANDRAIL SEAWARD SIDE ONLY

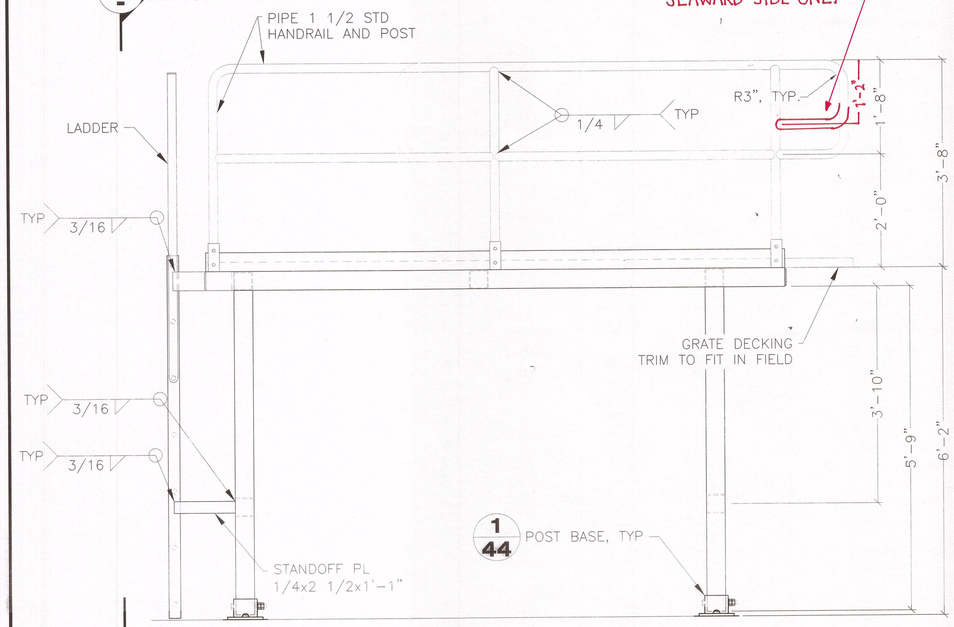

ELEVATION

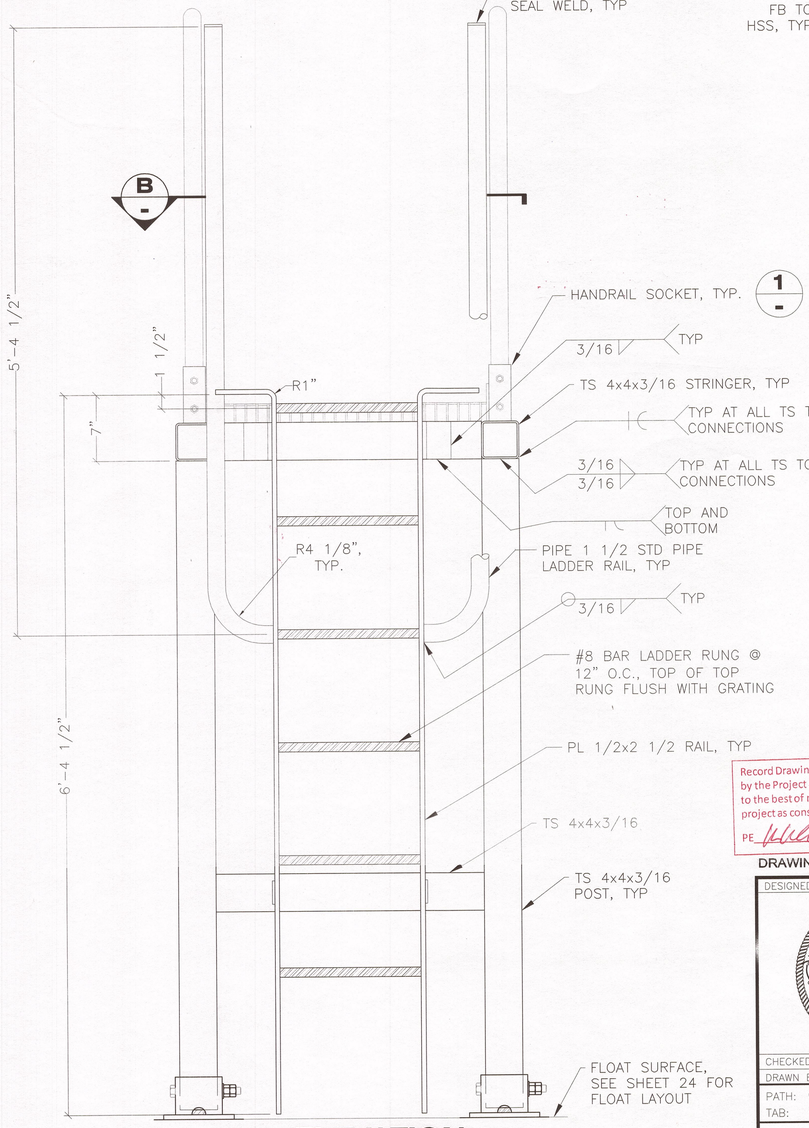

A/- **ELEVATION LADDER**

NOTES:
1. FINISH: HOT DIP GALV.
2. GRATING: WELDED STEEL, SERRATED.
   2"x3/16 B.B @ 1 3/16" O.C.
   1/4 C.B. @ 4' O.C

PROVIDE FULL LENGTH OF GRATING (11'-5 1/2")
CUT TO MATCH INTERMEDIATE RAMP FRAMING IN FIELD

Record Drawings have been reviewed by the Project Engineer, and represent to the best of my knowledge, the project as constructed.
PE [signature] Date 12/6/15

DRAWING SCALES ARE FOR FULL-SIZE SHEETS. IF NO SCALE SHOWN, USE DIMENSIONS.

DESIGNED BY: D. LOWELL
STATE OF ALASKA 49th DAVID H. LOWELL CE-12614 REGISTERED PROFESSIONAL ENGINEER
6/6/14
CHECKED BY: STAFF
DRAWN BY: STAFF

STATE OF ALASKA
DEPARTMENT OF TRANSPORTATION & PUBLIC FACILITIES
SOUTHEAST REGION

CLARK BAY FERRY TERMINAL IMPROVEMENTS

PLATFORM A

PATH: Q:\POW\67449\PLANSET\MF\42 - PLATFORM A.DWG
TAB: 42 Friday, June 06, 2014 3:09:54 PM LOWELL, DAVID H (DOT)

REVISIONS		
NO.	DATE	DESCRIPTION

PROJECT DESIGNATION	YEAR	SHEET NO.	TOTAL SHEETS
67449/0924019	2014	42	~~57~~

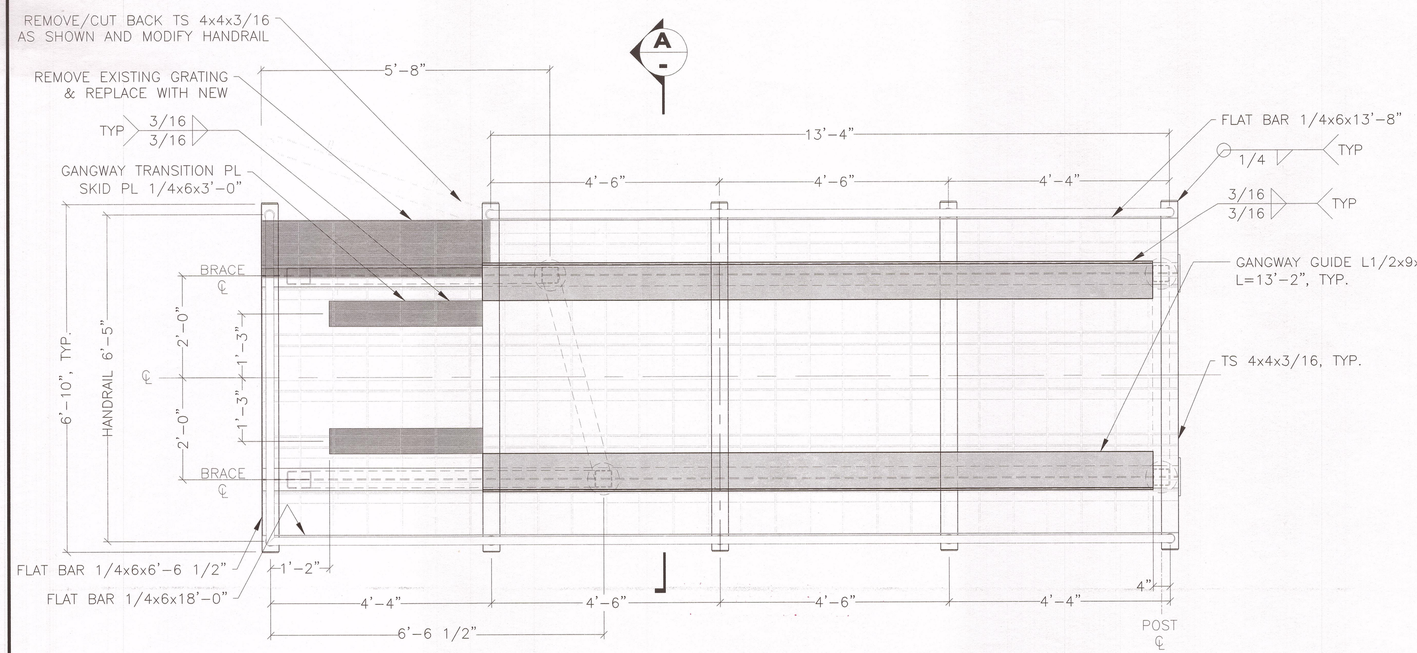

PLAN

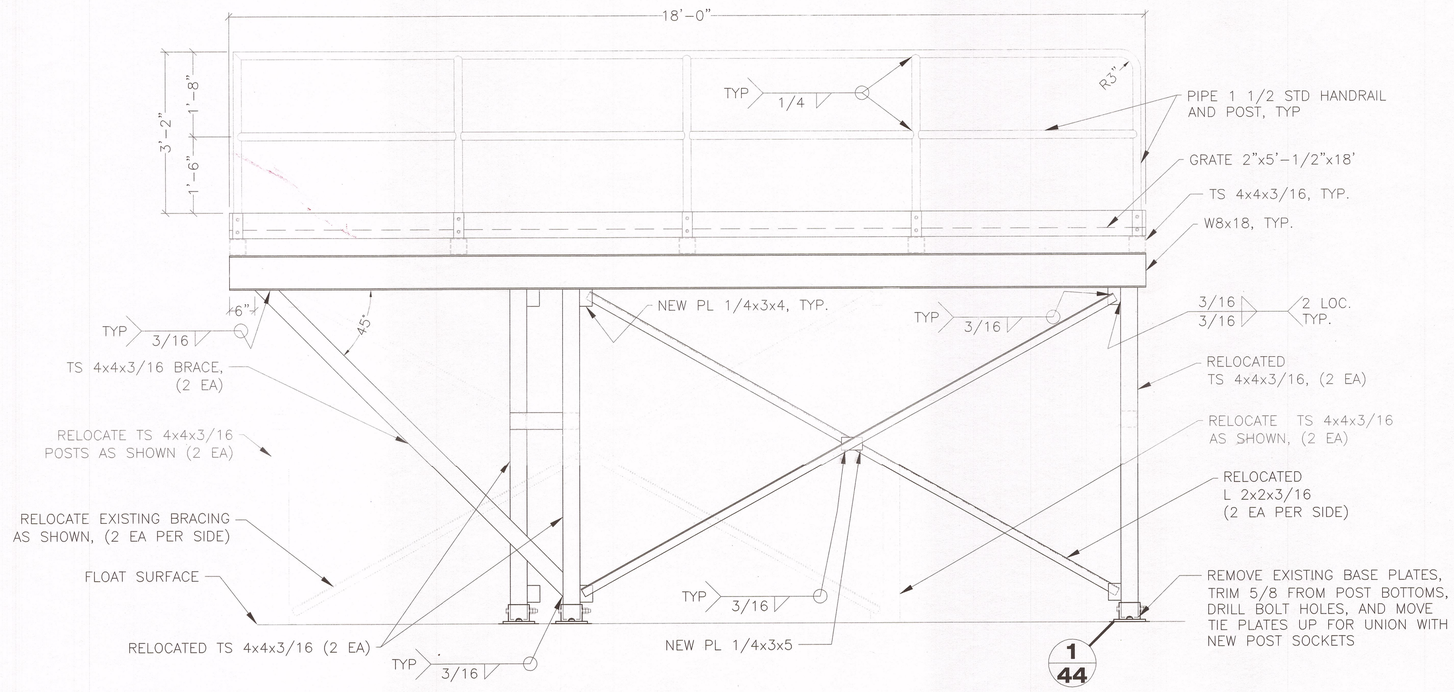

ELEVATION

NOTE: MODIFIED PLATFORM "B" WEST SHOWN, EAST SIDE NEW AND OPPOSITE HAND

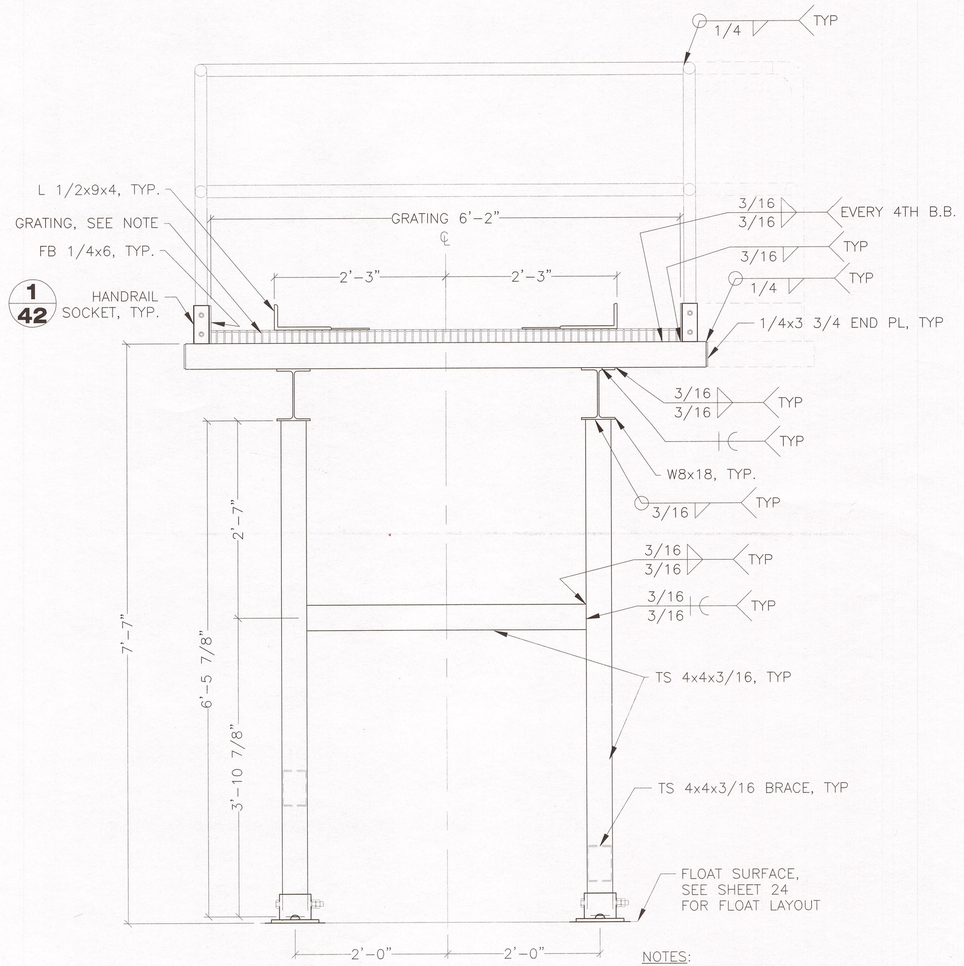

NOTES:
1. FINISH: HOT DIP GALV
2. GRATE: WELDED STEEL, BANDED 2"x3/16 B.B. @ 1 3/16" O.C 1/4 C.B. @ 4' O.C.

A/- SECTION

DRAWING SCALES ARE FOR FULL-SIZE SHEETS. IF NO SCALE SHOWN, USE DIMENSIONS.

Record Drawings have been reviewed by the Project Engineer, and represent to the best of my knowledge, the project as constructed.
PE _____ Date 12/10/15

DESIGNED BY: D. LOWELL
CHECKED BY: STAFF
DRAWN BY: STAFF

STATE OF ALASKA
DEPARTMENT OF TRANSPORTATION & PUBLIC FACILITIES
SOUTHEAST REGION

STATE OF ALASKA 49th DAVID H. LOWELL CE-12614 REGISTERED PROFESSIONAL ENGINEER 6/6/14

CLARK BAY FERRY TERMINAL IMPROVEMENTS

PLATFORM B

PATH: Q:\POW\67449\PLANSET\MF\43 – PLATFORM B.DWG
TAB: 43 Friday, June 06, 2014 3:11:39 PM LOWELL, DAVID H (DOT)

REVISIONS		
NO.	DATE	DESCRIPTION

PROJECT DESIGNATION	YEAR	SHEET NO.	TOTAL SHEETS
67449/0924019	2014	43	~~57~~

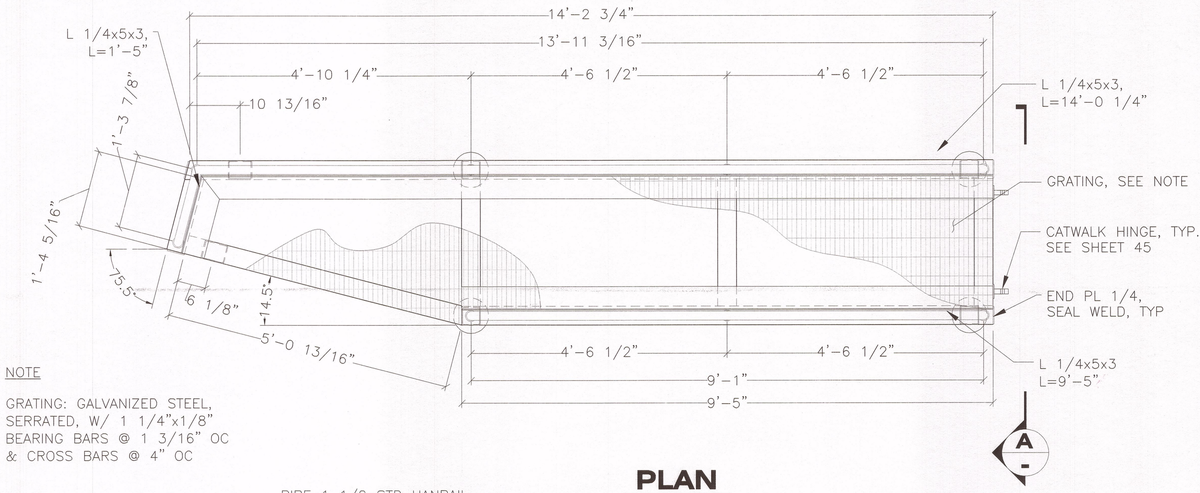

NOTE

GRATING: GALVANIZED STEEL, SERRATED, W/ 1 1/4"x1/8" BEARING BARS @ 1 3/16" OC & CROSS BARS @ 4" OC

PLAN

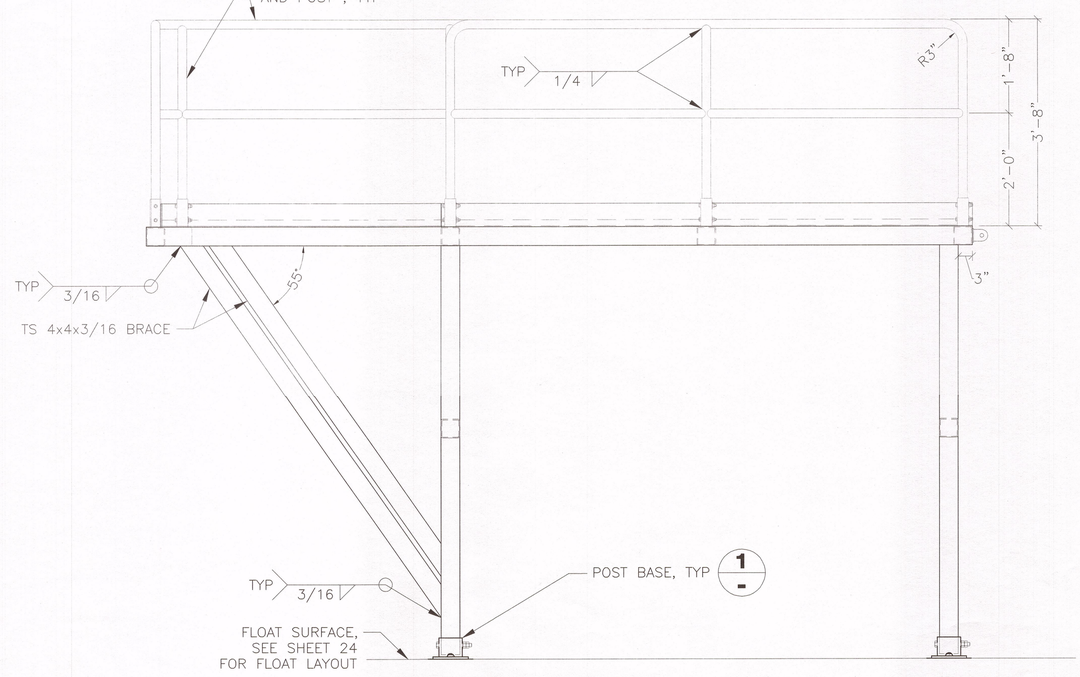

ELEVATION

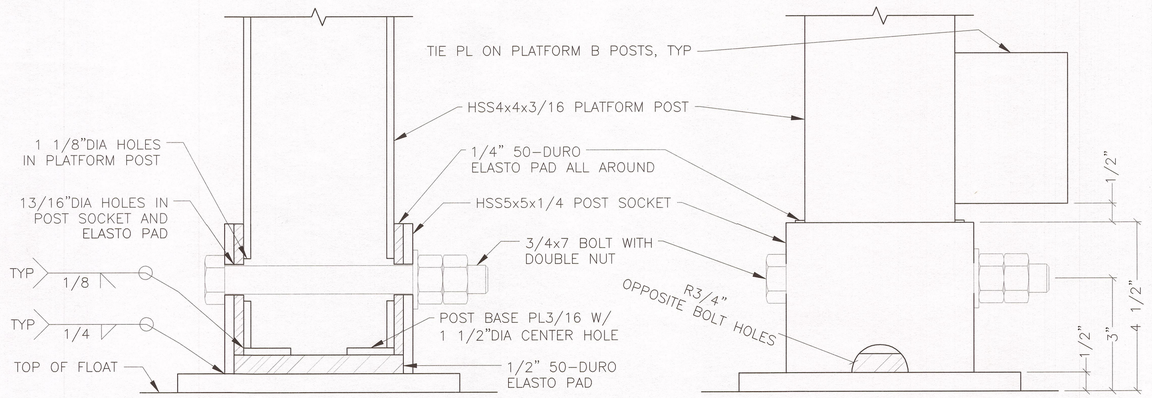

B - SECTION

ELEVATION

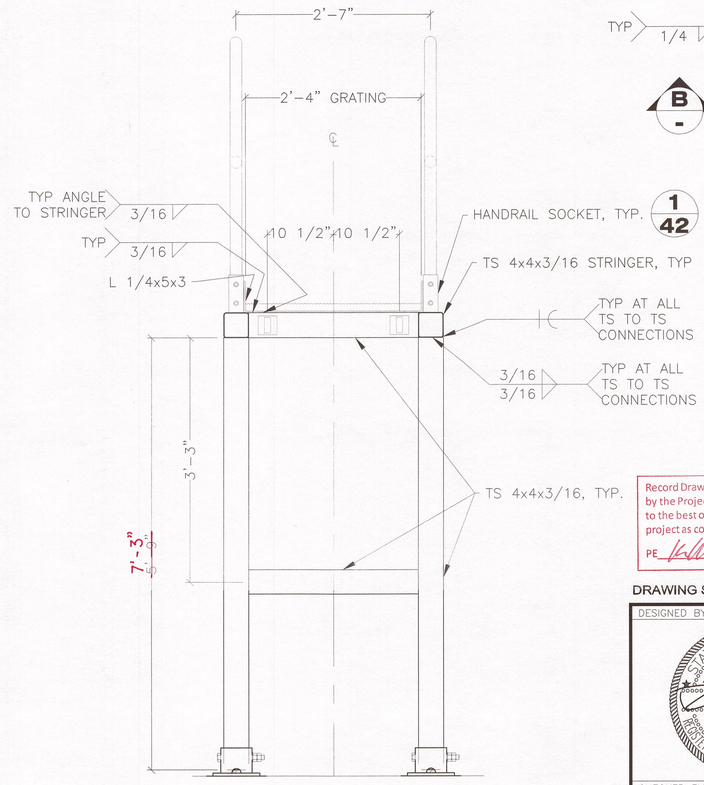

A - ELEVATION

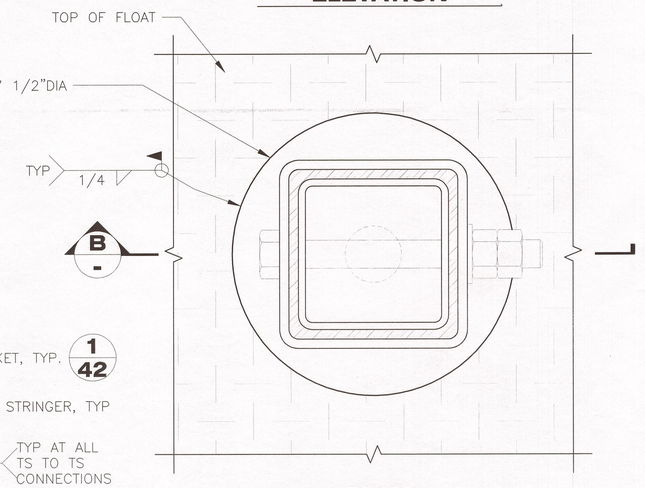

PLAN

1/- 1/44 PLATFORM POST BASE TYP, ALL PLATFORMS

Record Drawings have been reviewed by the Project Engineer, and represent to the best of my knowledge, the project as constructed.
PE [signature] Date 12/14/15

DRAWING SCALES ARE FOR FULL-SIZE SHEETS. IF NO SCALE SHOWN, USE DIMENSIONS.

DESIGNED BY: D. LOWELL
STATE OF ALASKA 49th DAVID H. LOWELL CE-12614 REGISTERED PROFESSIONAL ENGINEER
6/6/14
CHECKED BY: STAFF
DRAWN BY: STAFF

STATE OF ALASKA
DEPARTMENT OF TRANSPORTATION & PUBLIC FACILITIES
SOUTHEAST REGION

CLARK BAY FERRY TERMINAL IMPROVEMENTS

PLATFORM C

PATH: O:\POW\67449\PLANSET\MF\44 -PLATFORM C.DWG
TAB: 44 Friday, June 06, 2014 3:12:29 PM LOWELL, DAVID H (DOT)

REVISIONS NO.	DATE	DESCRIPTION

PROJECT DESIGNATION	YEAR	SHEET NO.	TOTAL SHEETS
67449/0924019	2014	44	~~57~~

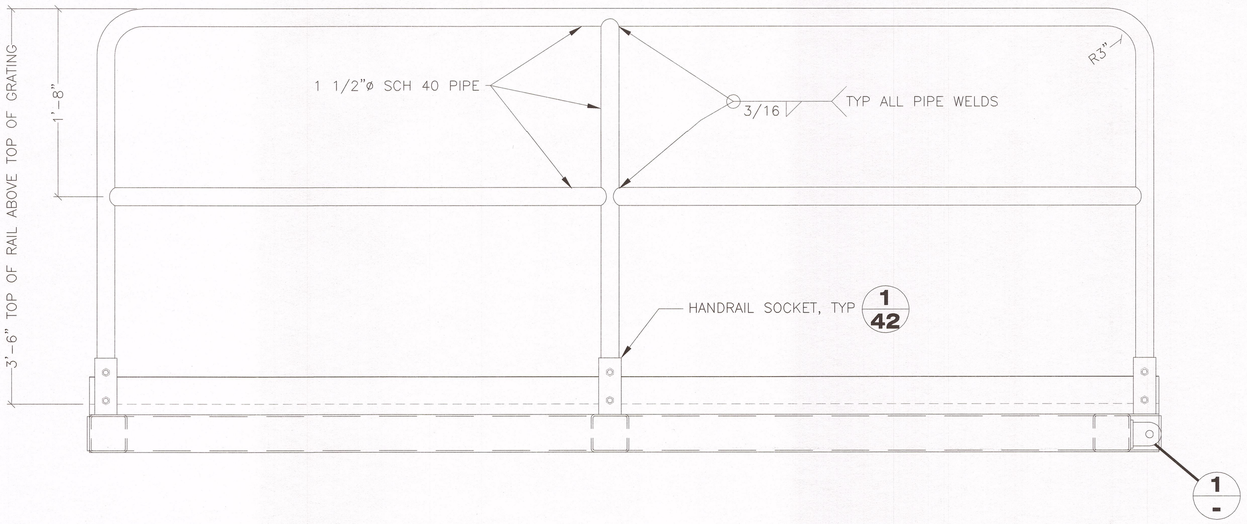

ELEVATION

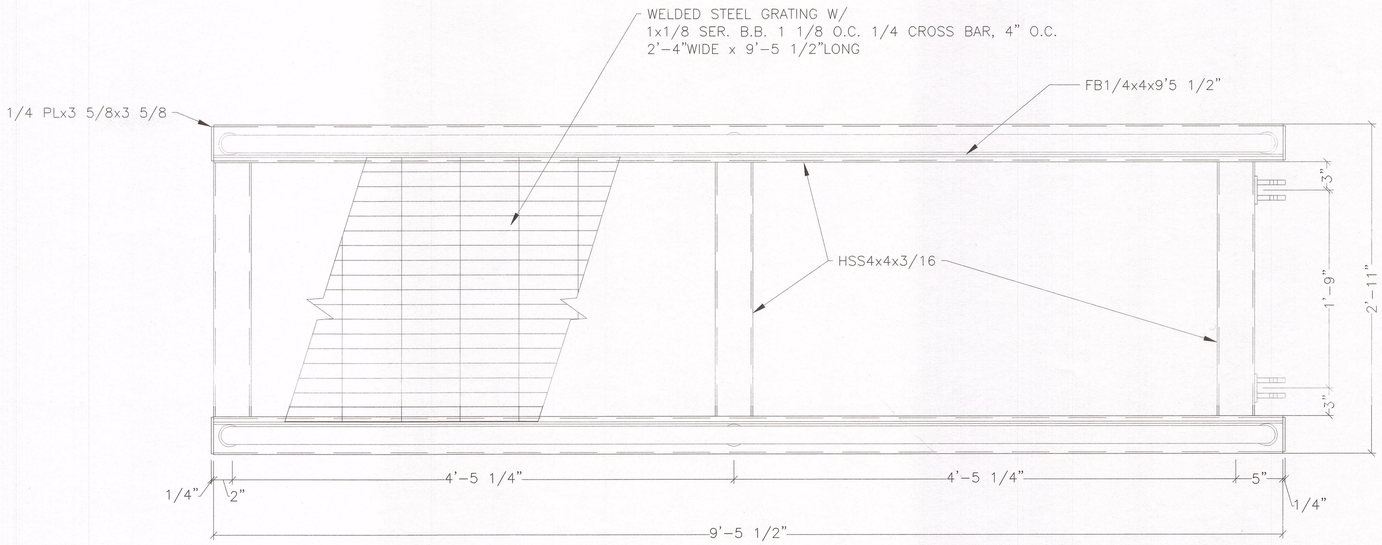

PLAN

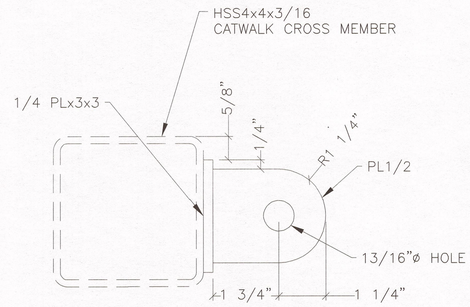

CATWALK HINGE
(WELD TO CATWALK)

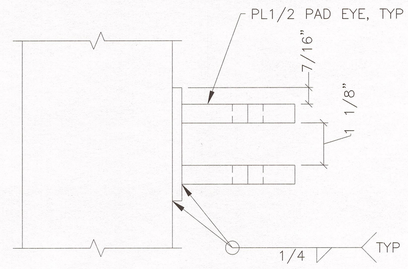

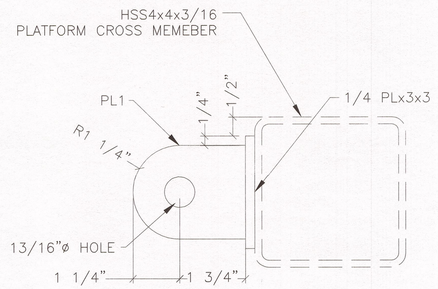

CATWALK HINGE
(WELD TO PLATFORM C)

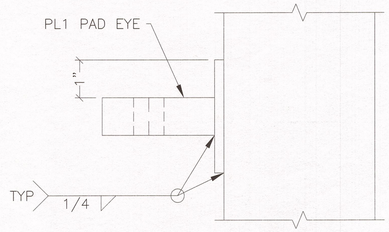

1 - DETAILS

NOTES:
1. NOTE ASSEMBLED STRUCTURE IS FULLY VENTED THROUGH INTERIOR HOLES FOR HOT DIP GALVANIZING AFTER FABRICATION.
2. HAND RAIL WELDED WITH .045 HARD WIRE & CO2 COVER.

DRAWING SCALES ARE FOR FULL-SIZE SHEETS. IF NO SCALE SHOWN, USE DIMENSIONS.

Record Drawings have been reviewed by the Project Engineer, and represent to the best of my knowledge, the project as constructed.
PE _____ Date 12/10/15

DESIGNED BY: D. LOWELL
STATE OF ALASKA · 49th · DAVID H. LOWELL · CE-12614 · REGISTERED PROFESSIONAL ENGINEER
6/6/14
CHECKED BY: STAFF
DRAWN BY: STAFF

STATE OF ALASKA
DEPARTMENT OF TRANSPORTATION
& PUBLIC FACILITIES
SOUTHEAST REGION

CLARK BAY FERRY TERMINAL IMPROVEMENTS

9'-6" CATWALK

PATH: Q:\POW\67449\PLANSET\MF\45 – CATWALK & DETAILS.DWG
TAB: 45 Friday, June 06, 2014 3:14:57 PM LOWELL, DAVID H (DOT)

REVISIONS NO.	DATE	DESCRIPTION

PROJECT DESIGNATION	YEAR	SHEET NO.	TOTAL SHEETS
67449/0924019	2014	45	~~57~~

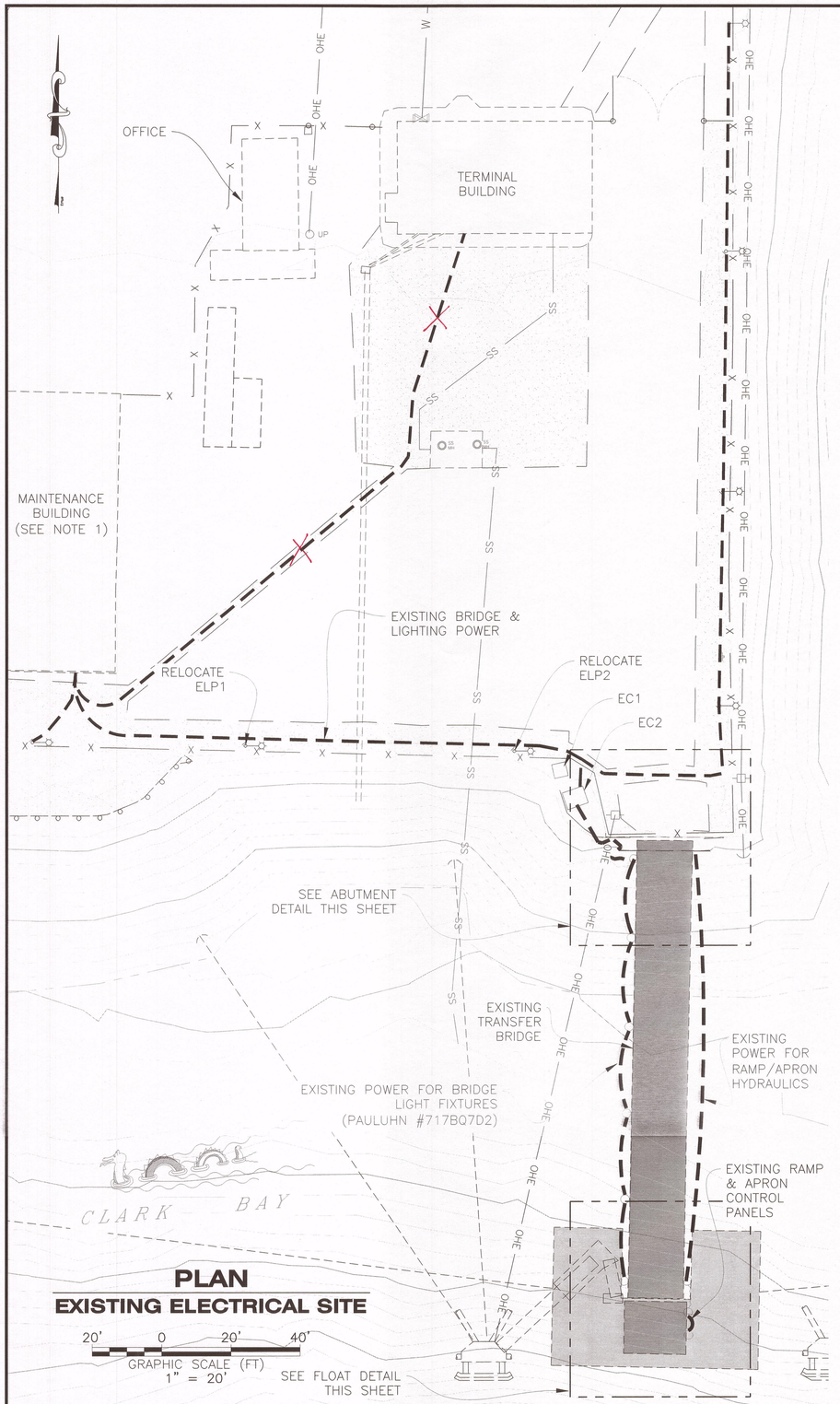

PLAN
EXISTING ELECTRICAL SITE

20' 0 20' 40'
GRAPHIC SCALE (FT)
1" = 20'

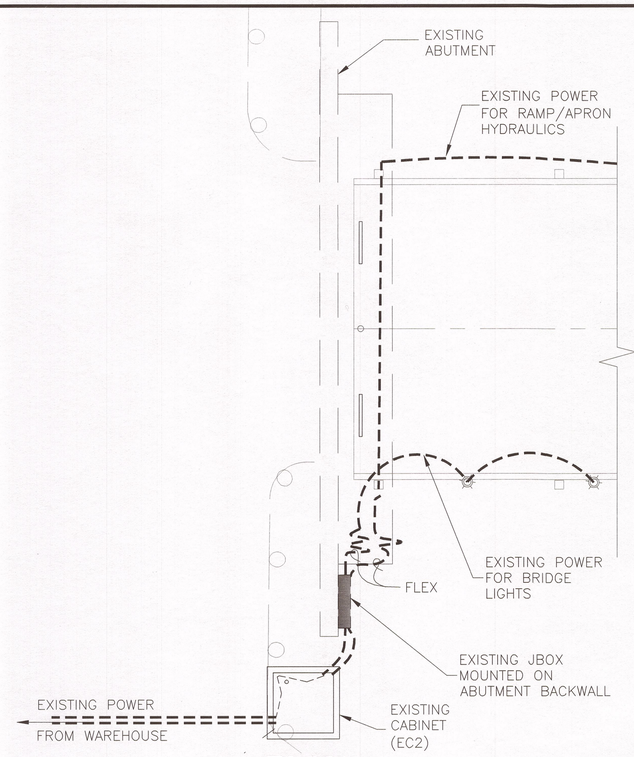

PLAN
ABUTMENT

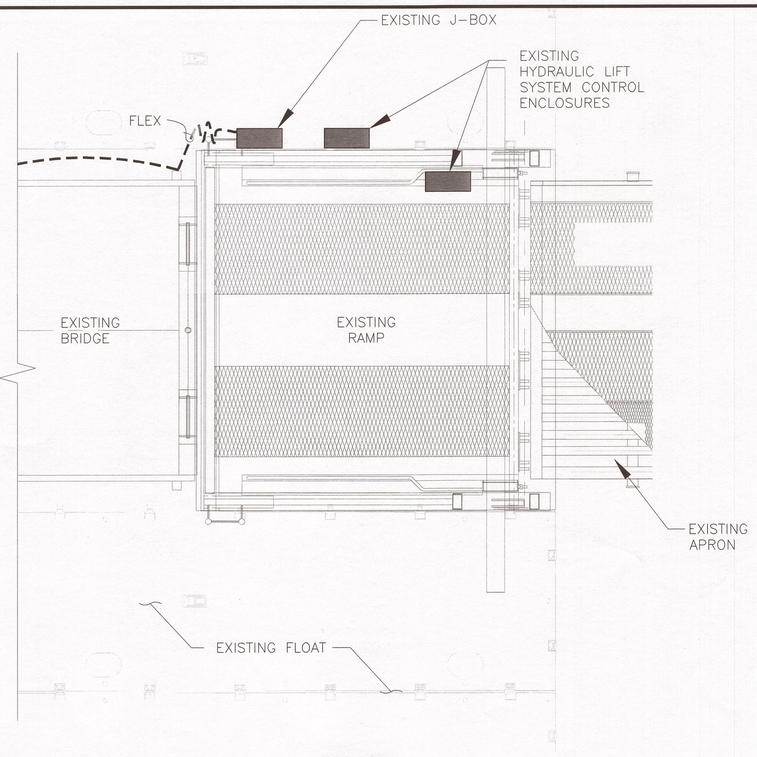

PLAN
FLOAT

NOTE: PLATFORMS & GANGWAY NOT SHOWN FOR CLARITY.

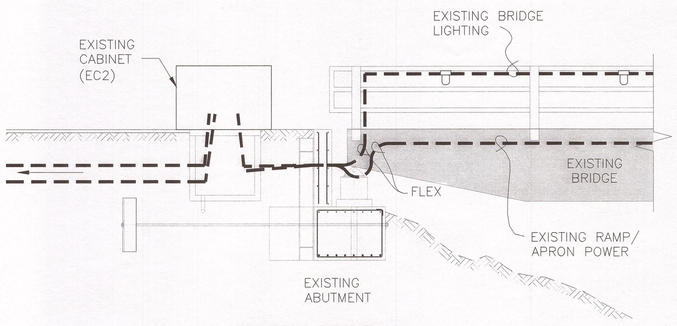

ELEVATION
ABUTMENT

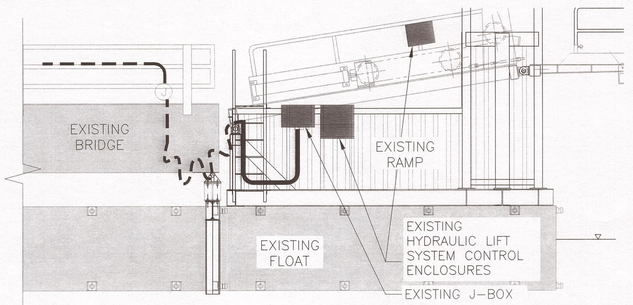

ELEVATION
FLOAT

NOTE: J-BOX & HYDRAULIC CONTROL ENCLOSURES MOUNTED ON EAST SIDE OF BRIDGE (SEE PLAN).

NOTES:

1. THE TYPE & SIZE OF ELECTRICAL POWER SERVICE, AND THE LOCATION OF MAIN BREAKER PANELS ARE NOT KNOWN AT THE TIME OF PRINTING. DRAWINGS OF EXISTING UG ELECTRICAL LINES WERE INTERPRETED BASED ON SURVEY LOCATION OF ASPHALT SAWCUT LINES, UNPAVED GRAVEL SURFACES IN AREAS OF LIKELY UTILITY TRENCHING.

2. THE ELECTRICAL PLANS PROVIDED ARE FOR INFORMATIONAL PURPOSES ONLY AND DO NOT SHOW ALL EXISTING AND NEW FEATURES THAT MAY BE REQUIRED. THE CONTRACTOR IS REQUIRED TO PERFORM THEIR OWN INSPECTIONS AND PREPARE A FINAL DESIGN UTILIZING A LICENSED ELECTRICAL ENGINEER IN ACCORDANCE WITH ALL APPLICABLE ELECTRICAL DESIGN AND CONSTRUCTION REGULATIONS, CODES AND REQUIREMENTS. FINAL CONSTRUCTION WORK SHALL BE BASED ON THE APPROVED ELECTRICAL DESIGN PROVIDED BY THE CONTRACTOR. REFERENCE SECTION 662 OF THE SPECIAL PROVISIONS.

Record Drawings have been reviewed by the Project Engineer, and represent to the best of my knowledge, the project as constructed.
PE _____ Date 12/10/15

DRAWING SCALES ARE FOR FULL-SIZE SHEETS. IF NO SCALE SHOWN, USE DIMENSIONS.

DESIGNED BY: J. OSBURN
CHECKED BY: STAFF
DRAWN BY: STAFF

STATE OF ALASKA
JOEL D. OSBURN
CE-11014
PROFESSIONAL ENGINEER
6/6/14

STATE OF ALASKA
DEPARTMENT OF TRANSPORTATION & PUBLIC FACILITIES
SOUTHEAST REGION

CLARK BAY FERRY TERMINAL IMPROVEMENTS

POWER & LIGHTING
EXISTING LAYOUT

PATH: Q:\POW\67449\PLANSET\MF\46-47 - ELECTRICAL LAYOUTS.DWG
TAB: 46 Friday, June 06, 2014 3:30:09 PM LOWELL, DAVID H (DOT)

REVISIONS NO.	DATE	DESCRIPTION

PROJECT DESIGNATION	YEAR	SHEET NO.	TOTAL SHEETS
67449/0924019	2014	46	~~57~~

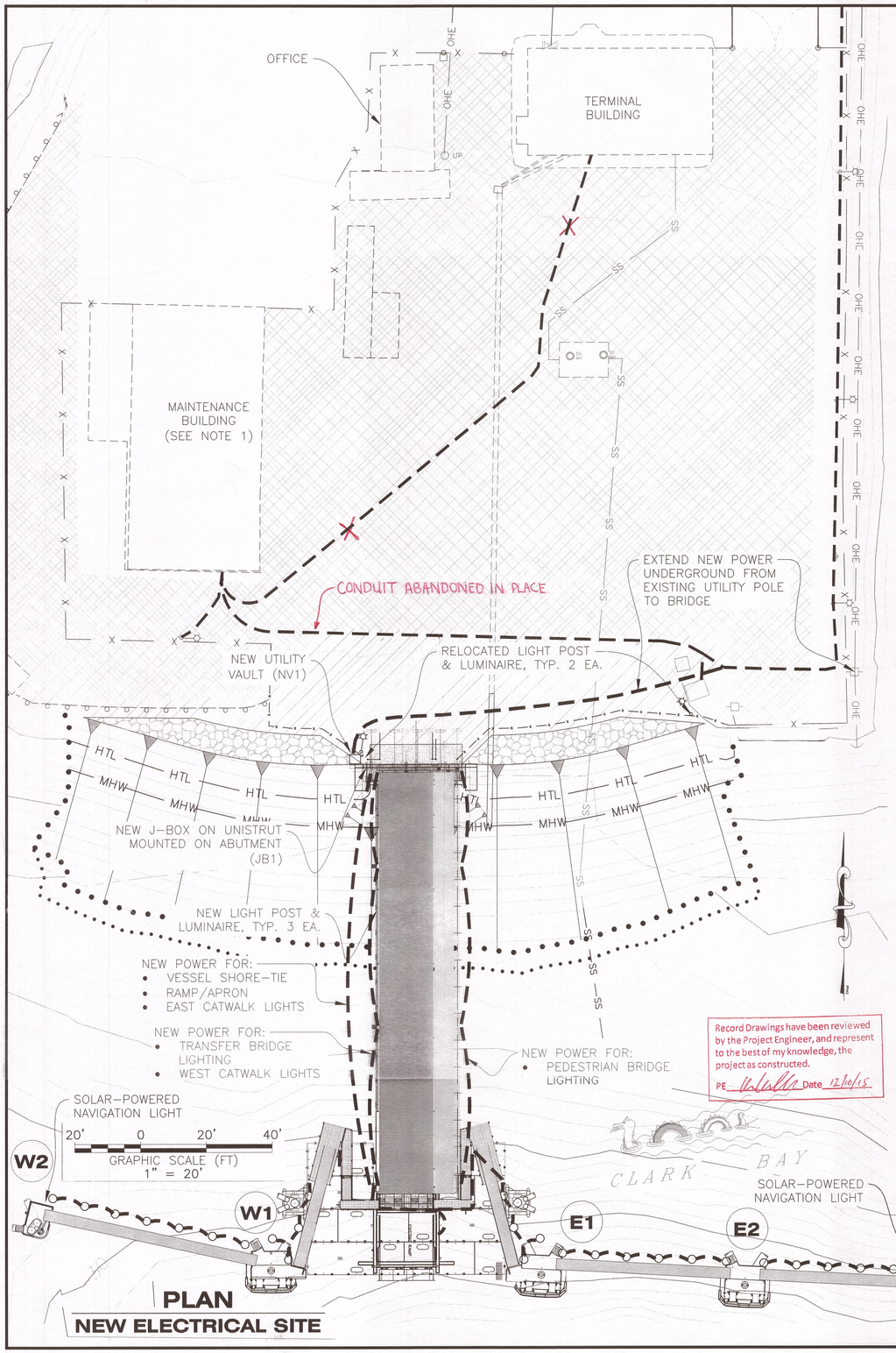

PLAN
NEW ELECTRICAL SITE

Record Drawings have been reviewed by the Project Engineer, and represent to the best of my knowledge, the project as constructed.
PE Date 12/10/15

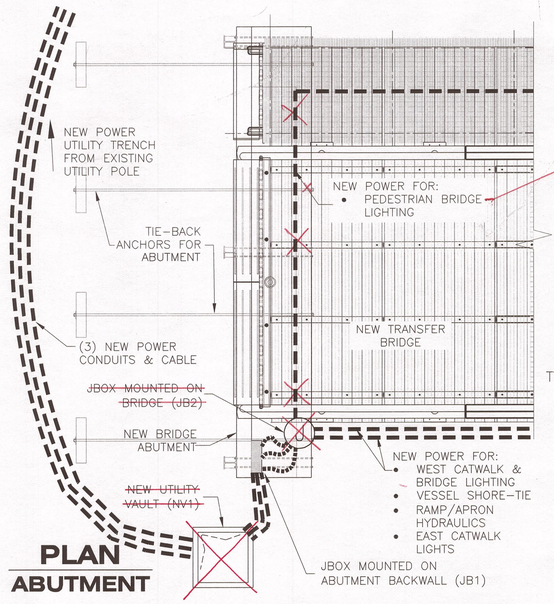

PLAN
ABUTMENT

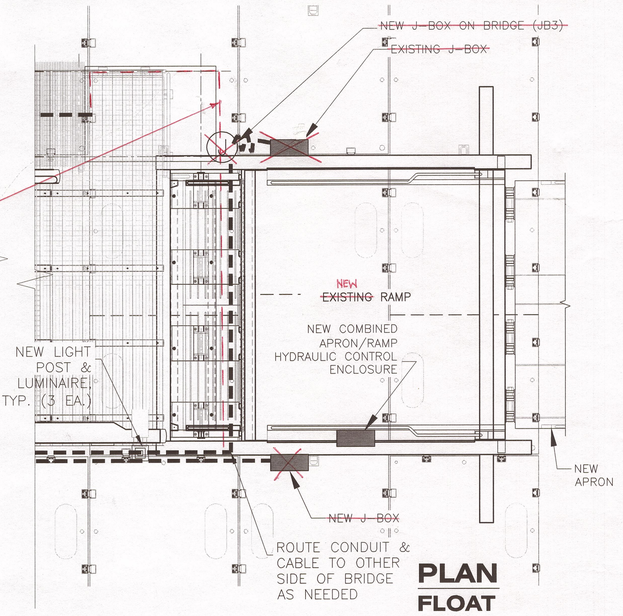

PLAN
FLOAT

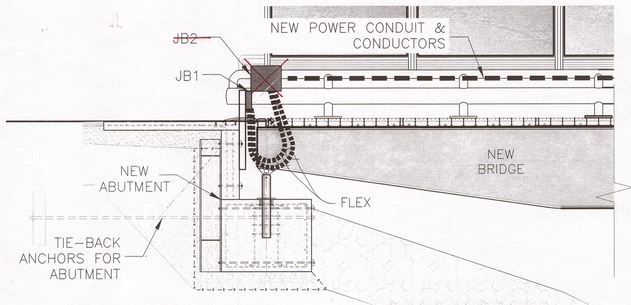

ELEVATION
ABUTMENT

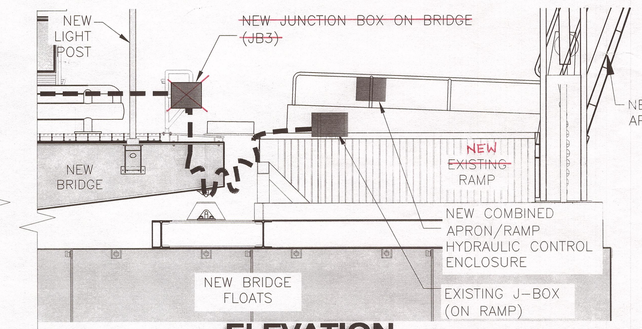

ELEVATION
FLOAT

NOTE: J-BOX MOUNTED ON EAST SIDE OF BRIDGE (SEE PLAN)

ELECTRICAL RECONSTRUCTION NOTES:

THIS PLAN IS FOR INFORMATIONAL PURPOSES ONLY AND DEPICTS THE SCOPE OF THE ELECTRICAL WORK. THE CONTRACTOR SHALL PERFORM THEIR WORK IN ACCORDANCE WITH SECTION 662 OF THE SPECIFICATIONS.

THE CONTRACTOR IS REQUIRED TO EMPLOY AN ALASKA LICENSED PROFESSIONAL ELECTRICAL ENGINEER TO FURNISH SEALED DRAWINGS FOR REMOVING, REPLACING, AND RECONSTRUCTING THE ELECTRICAL WORK AS GENERALLY INDICATED ON THE PLANS. SEE ATTACHED 662(2) ELECTRICAL SYSTEM DRAWINGS.

IT IS THE PROJECT INTENT TO REPLACE ALL EXISTING CONDUITS, CONDUCTORS, JUNCTION BOXES, ELECTRICAL CABINETS, AND LIGHT FIXTURES BETWEEN THE MAINTENANCE BUILDING & THE MARINE STRUCTURES, AND TO SALVAGE, MODIFY, AND RE-LOCATE LIGHT POLES IN THE STAGING AREA. REMOVE ALL CONDUCTORS WITHIN THE LIMITS OF WORK SHOWN. INSTALL NEW CONDUIT, CONDUCTORS, J-BOXES, & CABINETS BASED ON THE ELECTRICAL ENGINEER'S DESIGN. FURNISH ALL NEW LFNC, COMPLETE WITH STAINLESS STEEL STRAIN RELIEF GRIPS WHERE MOVEMENT OF SUPPORTING STRUCTURES OCCURS.

ALL EXISTING CONDITIONS ARE NOT SHOWN HERE. REFER TO AS-BUILT DRAWINGS FOR INFORMATION OF ELECTRICAL AND CONTROLS SYSTEMS. COPIES OF THESE DRAWINGS ARE AVAILABLE FROM THE DEPARTMENT. THOROUGHLY INSPECT AND DOCUMENT THE OPERATION OF ALL EXISTING ELECTRICAL FEATURES PRIOR TO START OF WORK. NOTIFY THE ENGINEER IF DEFECTS ARE FOUND AND WHEN EXISTING MATERIALS CANNOT BE REUSED.

MAINTAIN AREA LIGHTING OF MOORING STRUCTURES, GANGWAYS, AND CATWALKS DURING DEMOLITION AND CONSTRUCTION. PROVIDE ALTERNATE POWER AS REQUIRED TO MAKE ALL LIGHTING FIXTURES FUNCTIONAL DURING AMHS OPERATIONS.

SCOPE OF WORK:

1. FURNISH ELECTRICAL POWER FOR MARINE STRUCTURES:
   PROVIDE POWER FROM MAINTENANCE BUILDING TO NEW BRIDGE FOR RAMP & APRON CONTROLS, BRIDGE & CATWALK LIGHTING CIRCUITS MOUNTED ON THE NEW BRIDGE. TERMINATE POWER TO EXISTING BRIDGE.

2. RELOCATE ~~& INSTALL NEW~~ LIGHT POLES IN STAGING AREA:
   REMOVE & RELOCATE 2 LIGHT POLES ~~AND INSTALL 2 NEW LIGHT POLES WITH TWIN LUMINAIRES.~~ CONNECT TO EXISTING LIGHTING CIRCUIT.

DRAWING SCALES ARE FOR FULL-SIZE SHEETS. IF NO SCALE SHOWN, USE DIMENSIONS.

DESIGNED BY: J. OSBURN	STATE OF ALASKA DEPARTMENT OF TRANSPORTATION & PUBLIC FACILITIES SOUTHEAST REGION
STATE OF ALASKA 49th PROFESSIONAL ENGINEER JOEL D. OSBURN CE-11014	**CLARK BAY FERRY TERMINAL IMPROVEMENTS**
6/6/14	**POWER & LIGHTING** NEW LAYOUT
CHECKED BY: STAFF	
DRAWN BY: STAFF	
PATH: Q:\POW\67449\PLANSET\MF\46-47 - ELECTRICAL LAYOUTS.DWG	
TAB: 47 Friday, June 06, 2014 3:37:00 PM LOWELL, DAVID H (DOT)	

REVISIONS			PROJECT DESIGNATION	YEAR	SHEET NO.	TOTAL SHEETS
NO.	DATE	DESCRIPTION	67449/0924019	2014	47	~~57~~

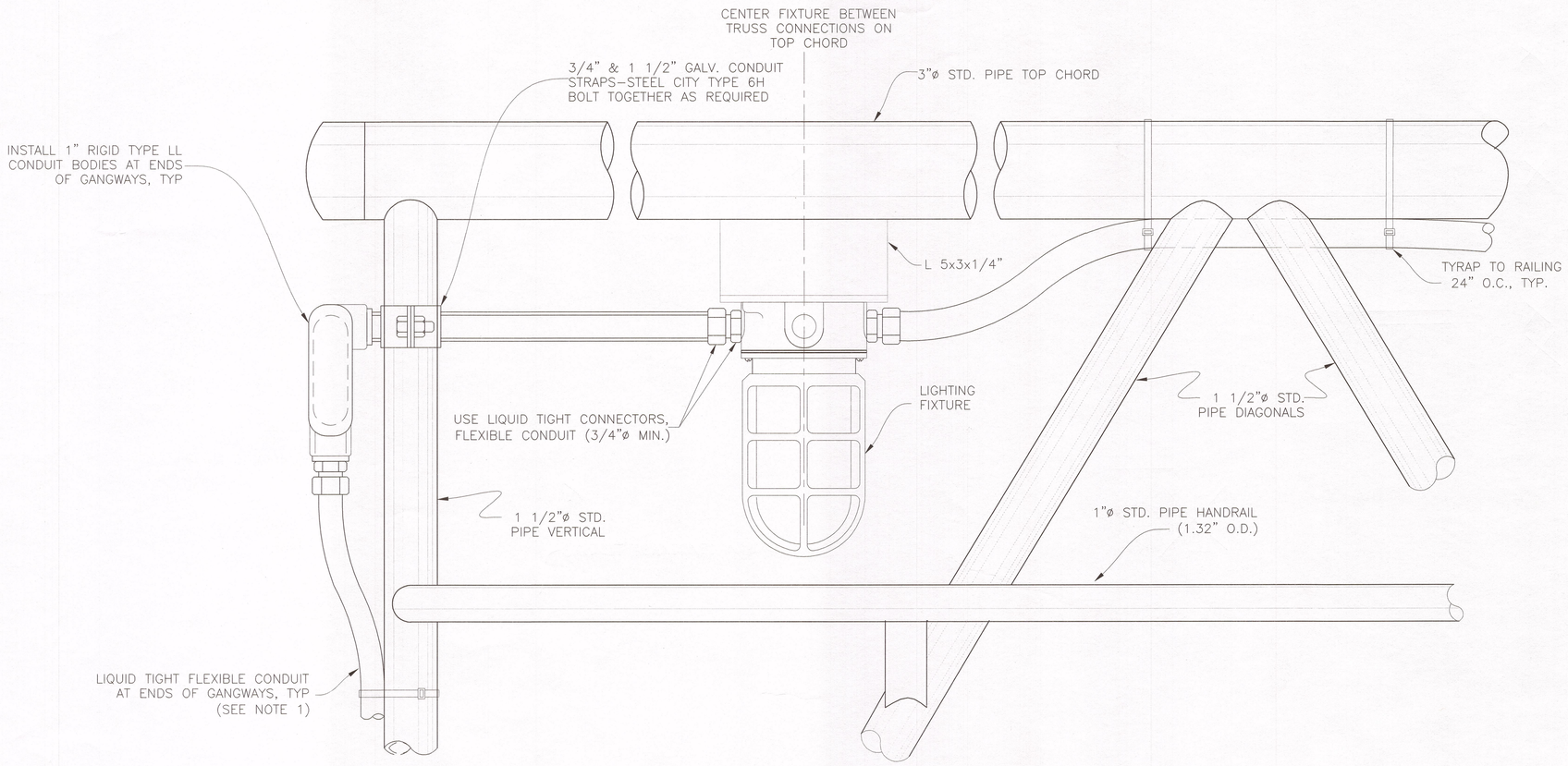

GANGWAY LIGHTING FIXTURE
ELEVATION VIEW

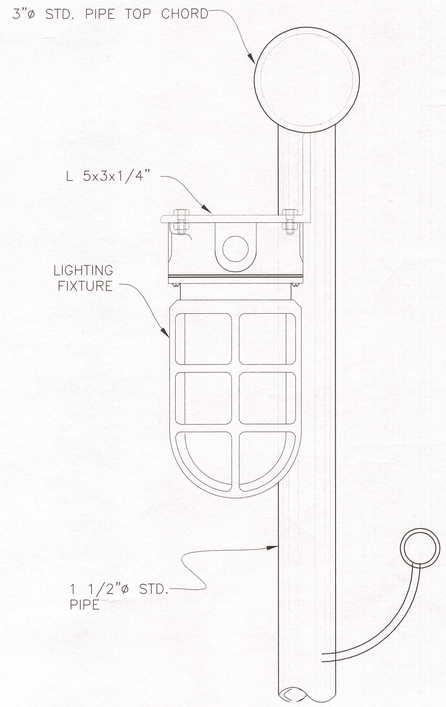

GANGWAY LIGHTING FIXTURE
SIDE VIEW

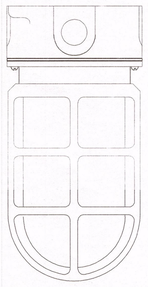

MARINE BRASS FIXTURE
PAULUHN ELEC MANUFACTURING
CATALOG NO. 717B
OR APPROVED EQUAL

LIGHTING FIXTURE
SECTION VIEW

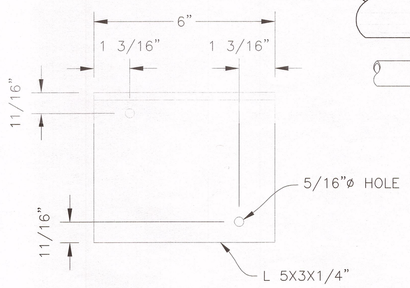

FIXTURE MOUNT DETAIL
TOP VIEW

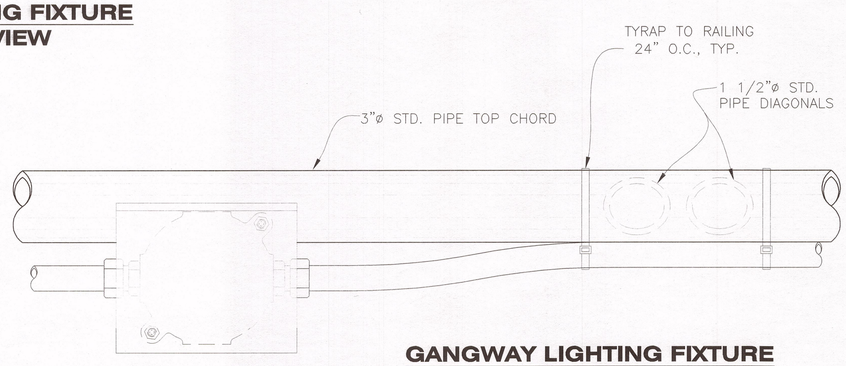

GANGWAY LIGHTING FIXTURE
TOP VIEW

SHEET NOTES:

1. CONTRACTOR SHALL INSTALL LIQUIDTIGHT FLEXIBLE CONDUIT AT GANGWAY ENDS TO ALLOW FOR FULL RANGE OF MOVEMENT ALONG SKIDPLATES. SEE GANGWAY PLATFORM SHEETS FOR DETAILS.

DRAWING SCALES ARE FOR FULL-SIZE SHEETS. IF NO SCALE SHOWN, USE DIMENSIONS.

Record Drawings have been reviewed by the Project Engineer, and represent to the best of my knowledge, the project as constructed.
PE _____ Date 12/10/15

DESIGNED BY: J. OSBURN
STATE OF ALASKA – 49th – JOEL D. OSBURN – CE-11014 – REGISTERED PROFESSIONAL ENGINEER
6/6/14
CHECKED BY: STAFF
DRAWN BY: STAFF

STATE OF ALASKA
DEPARTMENT OF TRANSPORTATION & PUBLIC FACILITIES
SOUTHEAST REGION

CLARK BAY FERRY TERMINAL IMPROVEMENTS

GANGWAY LIGHT FIXTURE / CONDUIT MOUNTING DETAILS

PATH: Q:\POW\67449\PLANSET\MF\48 – GANGWAY LIGHTS.DWG
TAB: 48 Friday, June 06, 2014 3:16:38 PM LOWELL, DAVID H (DOT)

REVISIONS NO.	DATE	DESCRIPTION

PROJECT DESIGNATION	YEAR	SHEET NO.	TOTAL SHEETS
67449/0924019	2014	48	~~57~~

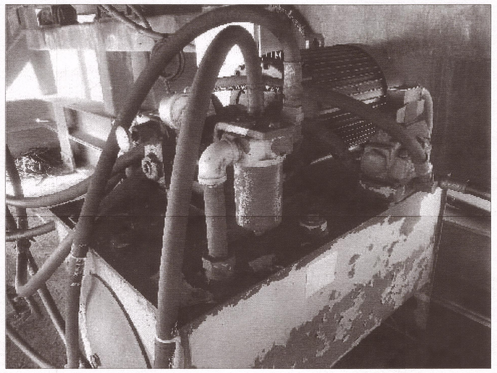

HYDRAULIC POWER UNIT

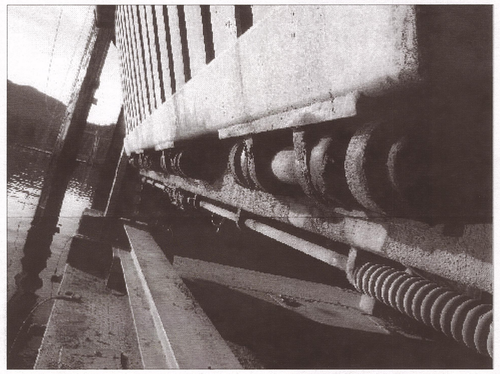

LOCK-OFF PIN ASSEMBLY

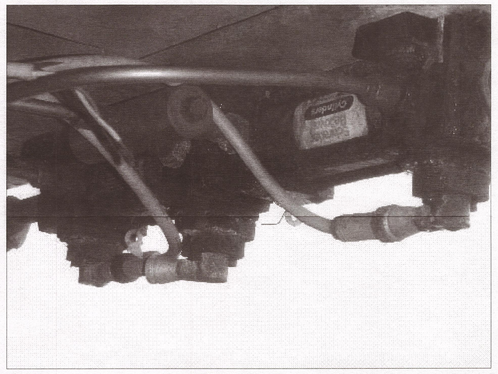

LOCK-OFF HYDRAULIC CYLINDERS



LIFT TOWER CYLINDER

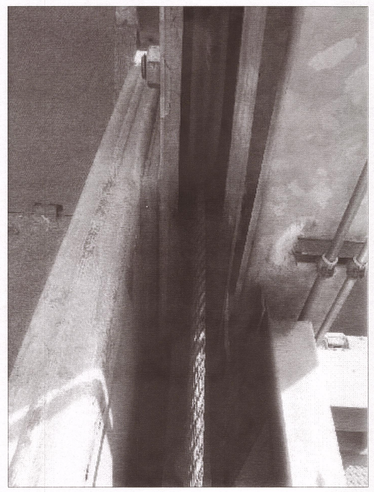

APRON TOWER SHEAVE

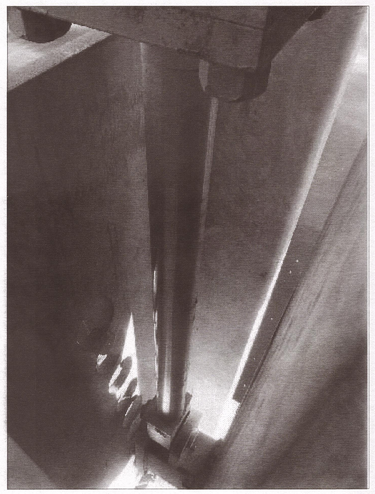

LIFT TOWER CYLINDER ROD

PROPOSED SCOPE OF WORK

1. REPLACE ALL HYDRAULIC LINES & HOSES WITH NEW STAINLESS STEEL SEAMLESS PIPE AND TUBING & SHORT HOSE RUNS. WRAP ALL HOSE FITTINGS.
2. REPLACE HYDRAULIC POWER UNIT (PUMP, MOTOR & COUPLING).
3. REPLACE SANDWICH MODULES (DIRECTIONAL VALVE, CHECK VALVE, PILOT CONTROLLED CHECK VALVE, FLOW CONTROL VALVE)
4. REPLACE HYDRAULIC CYLINDERS & MOUNTING BOLTS. GREASE CYLINDER CLEVISES.
5. REPLACE HYDRAULIC TANK, WITH BREATHER CAP. INSTALL IMMERSION HEATER AND FILL CAP ADAPTER.
6. REPLACE ALL FILTERS, UNLOADING VALVE, RELIEF VALVES, NEEDLE VALVE AND PRESSURE GAUGE.
7. REPLACE ALL RAMP AND APRON SHEAVE AND SLIDING BLOCK CABLE WITH THE SAME TYPE AS EXISTING.

GENERAL NOTES

1. THE INTENT OF THIS WORK IS TO REMOVE AND REPLACE ALL HYDRAULIC SYSTEM COMPONENTS ASSOCIATED WITH THE INTERMEDIATE RAMP AND APRON SYSTEMS. THIS INCLUDES HYDRAULIC ACTUATORS (CYLINDERS), HYDRAULIC PUMP, RESERVOIR, ELECTRIC MOTOR, FLOW CONTROL AND OTHER VALVES, AND ALL ASSOCIATED PIPING AND FITTINGS. THE PROJECT ALSO REQUIRES REMOVAL AND REPLACEMENT OF THE RAMP, APRON, SLIDING BLOCK AND SHEAVE CABLES. UNLESS PERMITTED BY THE ENGINEER, NO EXISTING HYDRAULIC SYSTEM COMPONENTS MAY BE RE-USED.
2. THE CONTRACTOR SHALL EMPLOY THE SERVICES OF A QUALIFIED HYDRAULICS AND CONTROLS ENGINEER OR TECHNICIAN UNDER ITEM 504(13), HYDRAULIC SYSTEM DESIGN, TO CONDUCT A FIELD INSPECTION, REVIEW THE EXISTING HYDRAULIC SYSTEMS AND PROVIDE RECOMMENDATIONS FOR PRODUCT SUBSTITUTIONS OR OTHER MODIFICATIONS FROM THOSE SHOWN ON THE PLANS AND THE AS-BUILT DRAWINGS. REFERENCE SPECIAL PROVISIONS, SECTION 504. SEE ATTACHED 504(14) NEW HYDRAULIC LIFT SYSTEM
3. EXISTING HYDRAULIC ACTUATORS, ELECTRIC MOTORS AND HYDRAULIC PUMPS SHALL BE SALVAGED AND DELIVERED TO THE IFA. ALL OTHER REMOVED ITEMS NOT INCORPORATED INTO THE PROJECT SHALL BECOME THE PROPERTY OF THE CONTRACTOR AND PROPERLY DISPOSED.
4. REFERENCE AS-BUILT DRAWINGS FOR DETAILS ON EXISTING COMPONENTS AND DETAILS. THE CONTRACTOR SHALL FIELD VERIFY ALL EXISTING FEATURES AND WORK PRIOR TO REMOVING AND ITEMS OR CONDUCTING NEW WORK.
5. PRODUCTS SPECIFIED ON THE PLANS OR THE AS-BUILT DRAWINGS MAY NO LONGER BE AVAILABLE OR SUITABLE FOR THE INTENDED APPLICATION. PRODUCT SUBSTITUTIONS WILL BE ALLOWED. AS PART OF THE WORK UNDER ITEM 504(1), THE CONTRACTOR SHALL PREPARE A DETAILED LIST OF ALL PROPOSED PRODUCTS AND NOTE ANY REQUESTED PRODUCT SUBSTITUTIONS OR DEVIATIONS. THIS LIST WILL BE REVIEWED AND APPROVED BY THE ENGINEER.
6. THE CONTRACTOR SHALL SEQUENCE AND PHASE ALL WORK SO THAT THE FERRY TERMINAL IS OPERATIONAL AND MADE SAFE FOR PUBLIC USE DURING ALL SCHEDULED HOURS OF OPERATION. DO NOT REMOVE EXISTING SYSTEMS UNTIL THE AUTHORIZED TERMINAL CLOSURE PERIOD OR ALTERNATIVE SYSTEMS ARE IN PLACE TO OPERATE THE APRON. SUBMIT A DETAILED CONSTRUCTION PHASING PLAN FOR APPROVAL PRIOR TO START OF ANY WORK.
7. NEW HYDRAULIC SYSTEM SHALL BE DESIGNED AND CALIBRATED TO EQUALIZE CYLINDER MOVEMENT AND CABLE LOAD ON BOTH SIDES OF INTERMEDIATE RAMP AND APRON.
8. ALL HYDRAULIC PRESSURE COMPONENTS SHALL BE RATED FOR 3000 PSIG MIN. JIC SWIVEL FITTINGS OR 4-BOLT FLANGE HOSE ENDS WILL BE USED ON ALL HOSE ASSEMBLIES. MAXIMUM WORKING PRESSURE OF RETURN PIPING IS 260 PSIG.
9. ALL TUBING AND FITTINGS SHALL BE SEAMLESS STAINLESS STEEL ALLOY T316 OR EQUAL.
10. HYDRAULIC FLUID: CHEVRON "RYKON ISO-32, OR APPROVED EQUAL.
11. TANK OIL TEMPERATURE MUST BE 30° F MINIMUM BEFORE OPERATING ELECTRIC MOTOR. 90° F IS OPTIMAL AND MAXIMUM IS 140° F.
12. ALL PIVOT MOUNTS AND PIVOT ROD EYES SHALL HAVE STAINLESS STEEL GREASE FITTINGS TOP AND BOTTOM. ALL PINS SHALL BE GREASED PRIOR/DURING ASSEMBLY.
13. COORDINATE ALL HYDRAULIC DESIGN WORK WITH THE ELECTRICAL DESIGN. HYDRAULIC SYSTEM SHALL BE MADE OPERABLE BY THE SHIP'S POWER IN THE EVENT OF SHORESIDE POWER FAILURE.
14. REFER TO SHEET 24 FOR APPROXIMATE HYDRAULICS POWER UNIT LOCATION ON THE NEW FLOAT. MAINTAIN AT LEAST 6" BETWEEN THE BACK OF THE UNIT AND RAMP ENCLOSURE.

Record Drawings have been reviewed by the Project Engineer, and represent to the best of my knowledge, the project as constructed.
PE [signature] Date 12/10/15

DRAWING SCALES ARE FOR FULL-SIZE SHEETS. IF NO SCALE SHOWN, USE DIMENSIONS.

DESIGNED BY: D. LOWELL
STATE OF ALASKA 49th DAVID H. LOWELL CE-12614 REGISTERED PROFESSIONAL ENGINEER
6/16/14
CHECKED BY: STAFF
DRAWN BY: STAFF

STATE OF ALASKA
DEPARTMENT OF TRANSPORTATION
& PUBLIC FACILITIES
SOUTHEAST REGION

CLARK BAY FERRY TERMINAL IMPROVEMENTS

HYDRAULICS REPLACEMENT

PATH: Q:\POW\67449\PLANSET\MF\49-51 - HYDRAULICS REPLACEMENT.DWG
TAB: 49 Monday, June 16, 2014 3:03:22 PM LOWELL, DAVID H (DOT)

REVISIONS NO.	DATE	DESCRIPTION	PROJECT DESIGNATION	YEAR	SHEET NO.	TOTAL SHEETS
			67449/0924019	2014	49	~~57~~

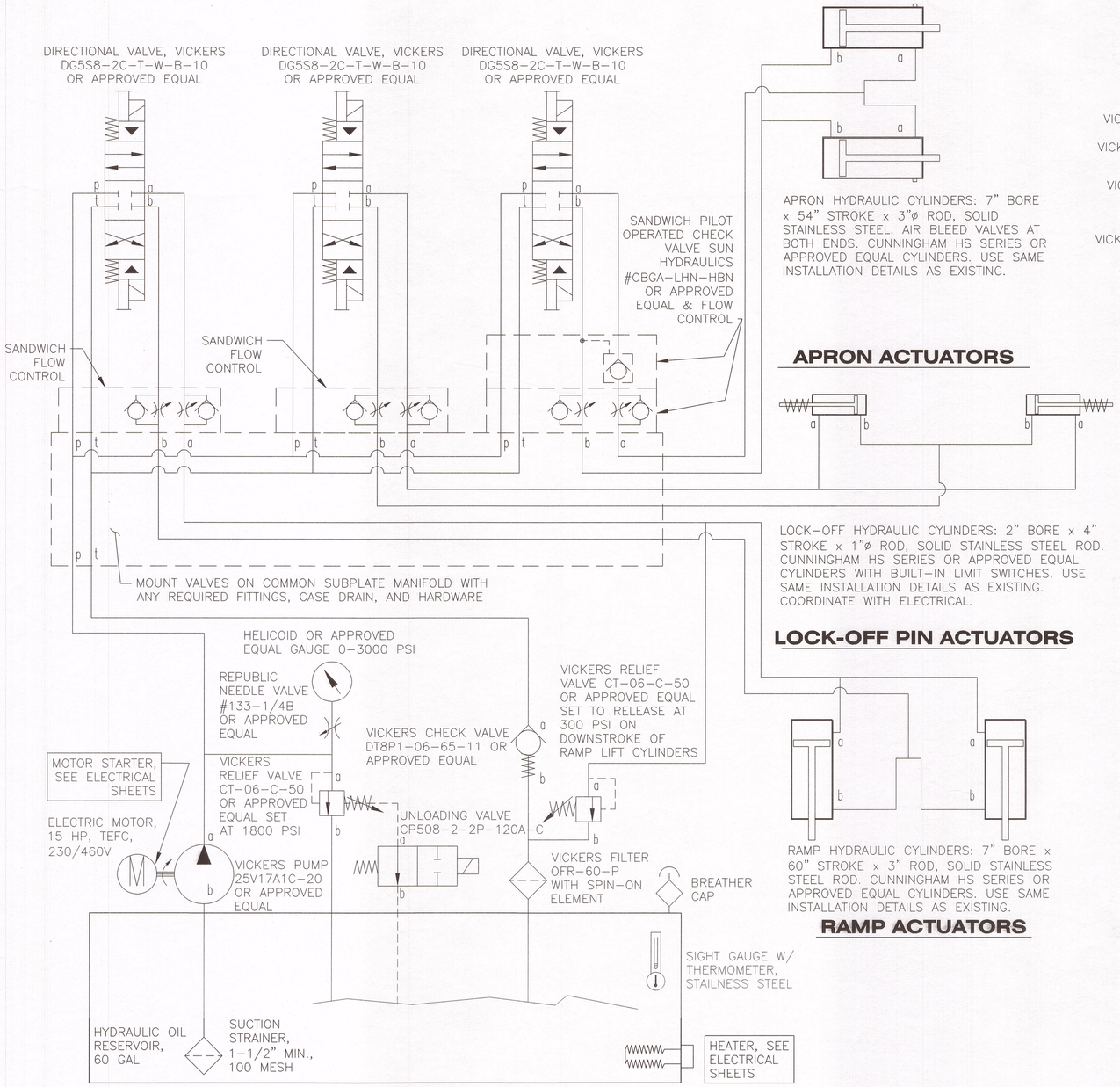

HYDRAULIC SCHEMATIC

APRON HYDRAULIC CYLINDERS: 7" BORE x 54" STROKE x 3"ø ROD, SOLID STAINLESS STEEL. AIR BLEED VALVES AT BOTH ENDS. CUNNINGHAM HS SERIES OR APPROVED EQUAL CYLINDERS. USE SAME INSTALLATION DETAILS AS EXISTING.

APRON ACTUATORS

LOCK-OFF HYDRAULIC CYLINDERS: 2" BORE x 4" STROKE x 1"ø ROD, SOLID STAINLESS STEEL ROD. CUNNINGHAM HS SERIES OR APPROVED EQUAL CYLINDERS WITH BUILT-IN LIMIT SWITCHES. USE SAME INSTALLATION DETAILS AS EXISTING. COORDINATE WITH ELECTRICAL.

LOCK-OFF PIN ACTUATORS

RAMP HYDRAULIC CYLINDERS: 7" BORE x 60" STROKE x 3" ROD, SOLID STAINLESS STEEL ROD. CUNNINGHAM HS SERIES OR APPROVED EQUAL CYLINDERS. USE SAME INSTALLATION DETAILS AS EXISTING.

RAMP ACTUATORS

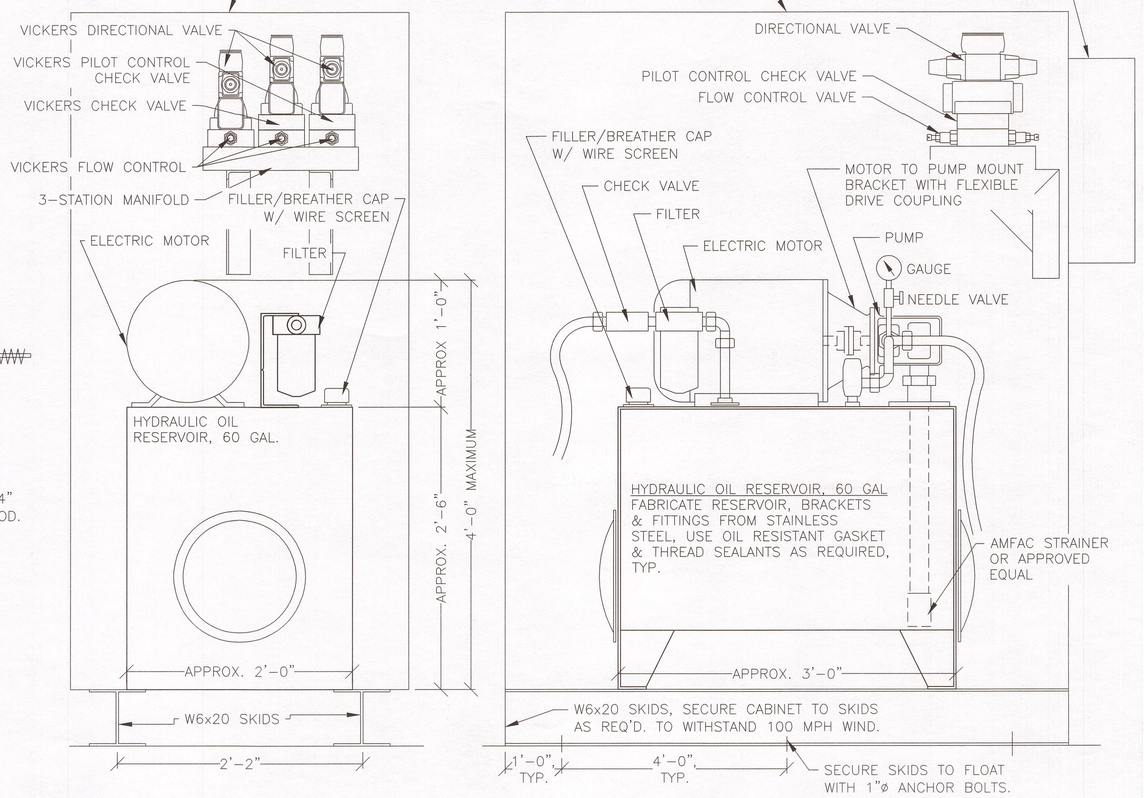

HYDRAULIC POWER UNIT

THIS SKETCH IS TO SHOW THAT THE RESERVOIR, MOTOR, PUMP, VALVES & FILTERS WILL COMBINE INTO A COMPACT UNIT

DRAWING SCALES ARE FOR FULL-SIZE SHEETS. IF NO SCALE SHOWN, USE DIMENSIONS.

*Record Drawings have been reviewed by the Project Engineer, and represent to the best of my knowledge, the project as constructed.
PE [signature] Date 12/10/15

*SEE ATTACHED 504(14) NEW HYDRAULIC LIFT SYSTEM

DESIGNED BY: D. LOWELL
STATE OF ALASKA 49th DAVID H. LOWELL CE-12614 REGISTERED PROFESSIONAL ENGINEER
6/6/14
CHECKED BY: STAFF
DRAWN BY: STAFF

STATE OF ALASKA
DEPARTMENT OF TRANSPORTATION & PUBLIC FACILITIES
SOUTHEAST REGION

CLARK BAY FERRY TERMINAL IMPROVEMENTS

HYDRAULIC POWER UNIT

PATH: Q:\POW\67449\PLANSET\MF\49-51 - HYDRAULICS REPLACEMENT.DWG
TAB: 50 Friday, June 06, 2014 3:19:16 PM LOWELL, DAVID H (DOT)

REVISIONS NO.	DATE	DESCRIPTION	PROJECT DESIGNATION	YEAR	SHEET NO.	TOTAL SHEETS
			67449/0924019	2014	50	~~57~~

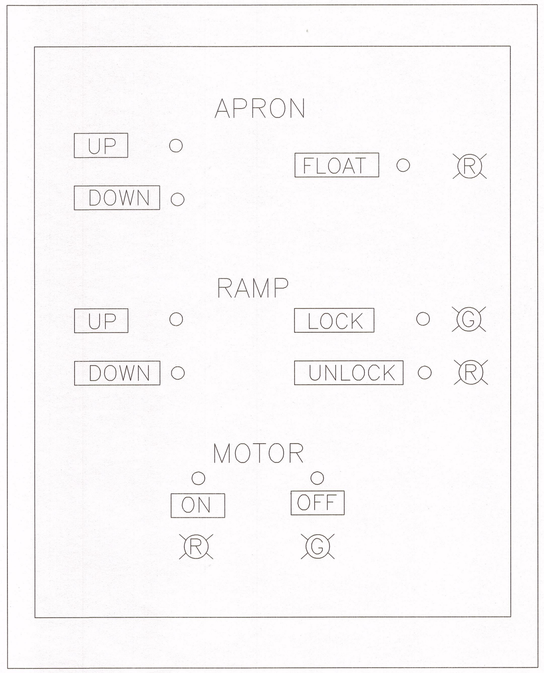

CONTROL PANEL

OPERATING INSTRUCTIONS

1. TURN MOTOR "ON"
2. TO RAISE OR LOWER RAMP, PUSH & HOLD "UNLOCK" UNTIL RED LIGHT IS ON. PUSH "UP" OR "DOWN" & HOLD UNTIL PIN IS ALIGNED WITH HOLE OF DESIRABLE POSITION. PUSH & HOLD "LOCK" GREEN LIGHT IS ON.
3. TO LOWER APRON, PUSH AND HOLD "DOWN" UNTIL APRON IS ON DECK. SWITCH TO "FLOAT" POSITION.
4. TRANSFER TRAFFIC
5. TO RAISE APRON PUSH & HOLD "UP" UNTIL APRON IS AT STORED POSITION
6. TURN MOTOR "OFF" WHEN CONTROLS NOT ATTENDED.

CONTROL PANEL NOTES

USE NEMA 4X TYPE 316L STAINLESS STEEL ENCLOSURE WITH PADLOCKABLE DOOR AND INNER NEMA 4X TYPE 316L SS ENCLOSURE WITH CONTROLS. SIZE OUTER ENCLOSURE FOR INNER ENCLOSURE AND ALSO TO MOUNT THE OPERATING INSTRUCTIONS ON THE INSIDE OF THE OUTER ENCLOSURE DOOR. THE LABELS AND INSTRUCTIONS SHALL USE A TEXT SIZE OF 3/4" HIGH MINIMUM. ENGRAVE THE TEXT ON A PHENOLIC PLATE. MOUNT THE CONTROLS ON A SEPARATE NEMA 4X ENCLOSURE THAT IS MOUNTED INSIDE THE OUTER ENCLOSURE. CONNECT THE CONDUIT TO THE BOTTOM OF THE INSIDE ENCLOSURE THROUGH A HOLE IN THE BOTTOM OF THE OUTER ENCLOSURE. MOUNT THE OUTER ENCLOSURE TO TWO 4" SQUARE GALVANIZED STEEL POSTS THAT ARE WELDED TO THE STRUCTURE.

DESIGN NOTES

1. THE INTENT OF THIS WORK IS TO REMOVE AND REPLACE ALL ELECTRICAL COMPONENTS ASSOCIATED WITH HYDRAULICS REPLACEMENT, INCLUDING BUT NOT LIMITED TO, LOCK–OFF PIN ACTUATOR BUILT IN LIMIT SWITCHES, NEW SOFT–START MOTOR CONTROLS, POWER CONTROLS, ELECTRICAL PANELS AND OTHER ELECTRICAL CONTROLS REQUIRED TO MAKE A HYDRAULICS SYSTEM FULLY OPERATIONAL.
2. THE CONTRACTOR SHALL HIRE A LICENSED ELECTRICAL ENGINEER UNDER ITEM 662 (1) ELECTRICAL SYSTEM DESIGN (UPLANDS & MARINE), TO PREPARE A FINAL DESIGN IN ACCORDANCE WITH ALL APPLICABLE ELECTRICAL DESIGN AND CONSTRUCTION REGULATIONS, CODES AND REQUIREMENTS. FINAL CONSTRUCTION WORK SHALL BE BASED ON THE APPROVED ELECTRICAL DESIGN PROVIDED BY THE CONTRACTOR. THE CONTRACTOR SHALL BE RESPONSIBLE FOR CONDUCTING THEIR OWN FIELD INSPECTIONS AND REVIEWING THE EXISTING ELECTRICAL SYSTEMS.
3. THE ELECTRICAL PLAN PROVIDED IS FOR INFORMATIONAL PURPOSE ONLY AND DOES NOT SHOW ALL FEATURES THAT MAY BE REQUIRED. REFERENCE AS–BUILT DRAWINGS FOR DETAILS NOT SHOWN. THE CONTRACTOR SHALL FIELD VERIFY ALL EXISTING FEATURES AND WORK PRIOR TO REMOVING ANY ITEMS OR CONDUCTING NEW WORK.
4. DISABLE APRON "FLOAT" ABILITY TO BE ACTIVATED WHILE APRON IS IN STORED POSITION OR APRON "UP" IS SELECTED.

Record Drawings have been reviewed by the Project Engineer, and represent to the best of my knowledge, the project as constructed.
PE _____ Date 12/10/15

DRAWING SCALES ARE FOR FULL-SIZE SHEETS. IF NO SCALE SHOWN, USE DIMENSIONS.

DESIGNED BY: D. LOWELL
STATE OF ALASKA 49th REGISTERED PROFESSIONAL ENGINEER DAVID H. LOWELL CE-12614
6/6/14
CHECKED BY: STAFF
DRAWN BY: STAFF

STATE OF ALASKA
DEPARTMENT OF TRANSPORTATION
& PUBLIC FACILITIES
SOUTHEAST REGION

CLARK BAY FERRY TERMINAL IMPROVEMENTS

CONTROL PANEL DETAILS

PATH: Q:\POW\67449\PLANSET\MF\49–51 – HYDRAULICS REPLACEMENT.DWG
TAB: 51 Friday, June 06, 2014 3:20:11 PM LOWELL, DAVID H (DOT)

REVISIONS		
NO.	DATE	DESCRIPTION

PROJECT DESIGNATION	YEAR	SHEET NO.	TOTAL SHEETS
67449/0924019	2014	51	~~57~~

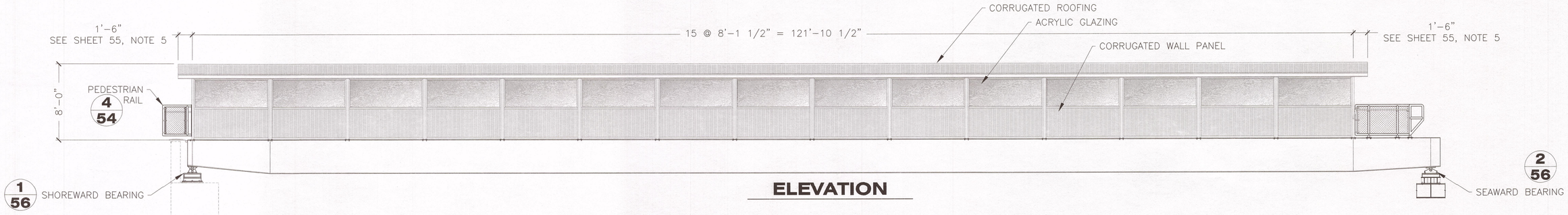

ELEVATION

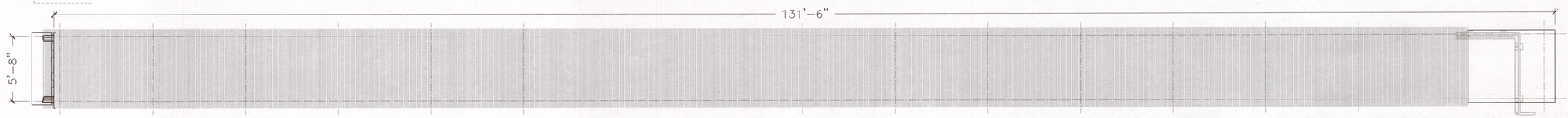

PLAN

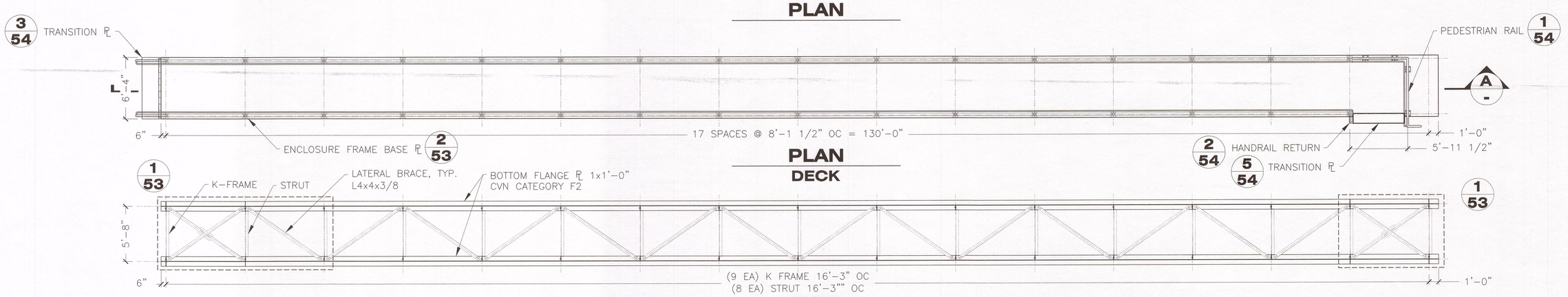

PLAN
DECK

PLAN
BOTTOM FLANGE

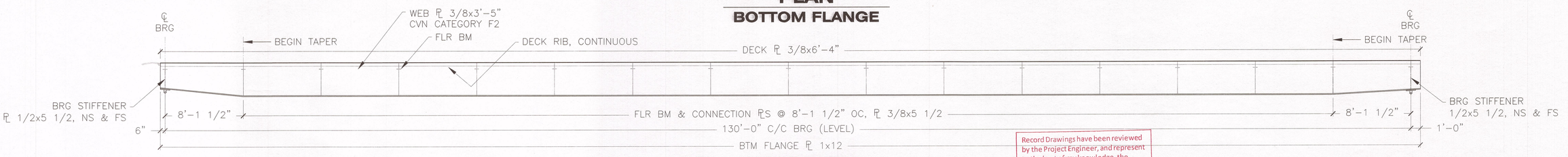

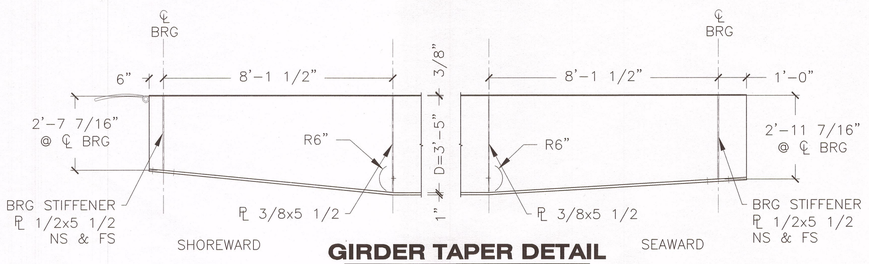

GIRDER TAPER DETAIL

SECTION A/-

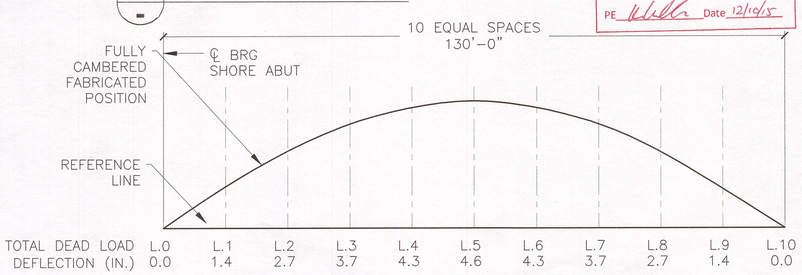

TOTAL DEAD LOAD DEFLECTION (IN.)	L.0	L.1	L.2	L.3	L.4	L.5	L.6	L.7	L.8	L.9	L.10
	0.0	1.4	2.7	3.7	4.3	4.6	4.3	3.7	2.7	1.4	0.0

CAMBER DIAGRAM

Record Drawings have been reviewed by the Project Engineer, and represent to the best of my knowledge, the project as constructed.
PE [signature] Date 12/10/15

DRAWING SCALES ARE FOR FULL-SIZE SHEETS. IF NO SCALE SHOWN, USE DIMENSIONS.

DESIGNED BY: T. DOGGETT
STATE OF ALASKA 49th TIMOTHY H. DOGGETT CE-9027 REGISTERED PROFESSIONAL ENGINEER 6/6/14
CHECKED BY: STAFF
DRAWN BY: STAFF

STATE OF ALASKA
DEPARTMENT OF TRANSPORTATION & PUBLIC FACILITIES
SOUTHEAST REGION

CLARK BAY FERRY TERMINAL IMPROVEMENTS
130' PEDESTRIAN BRIDGE

PATH: Q:\POW\67449\PLANSET\MF\52-57 - PEDESTRIAN BRIDGE.DWG
TAB: 52 Friday, June 06, 2014 3:22:19 PM LOWELL, DAVID H (DOT)

REVISIONS NO.	DATE	DESCRIPTION

PROJECT DESIGNATION	YEAR	SHEET NO.	TOTAL SHEETS
67449/0924019	2014	52	~~57~~

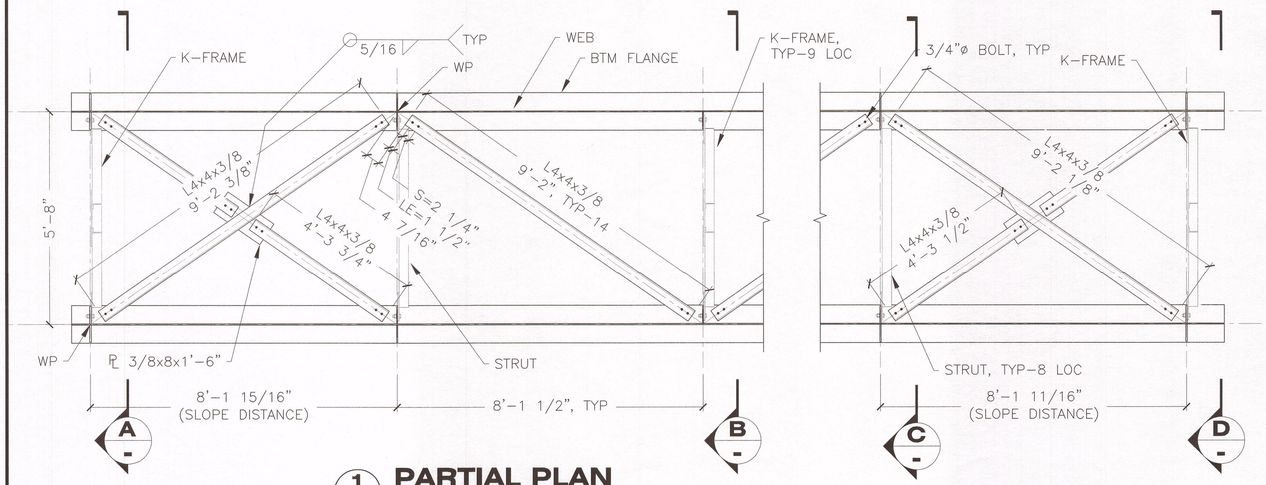

1/53 PARTIAL PLAN LATERAL BRACING

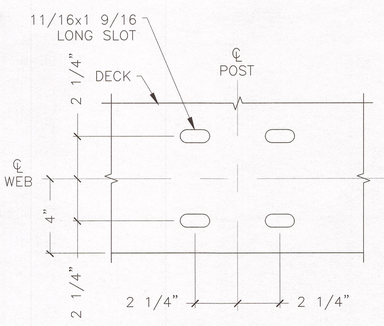

2/53 DETAIL

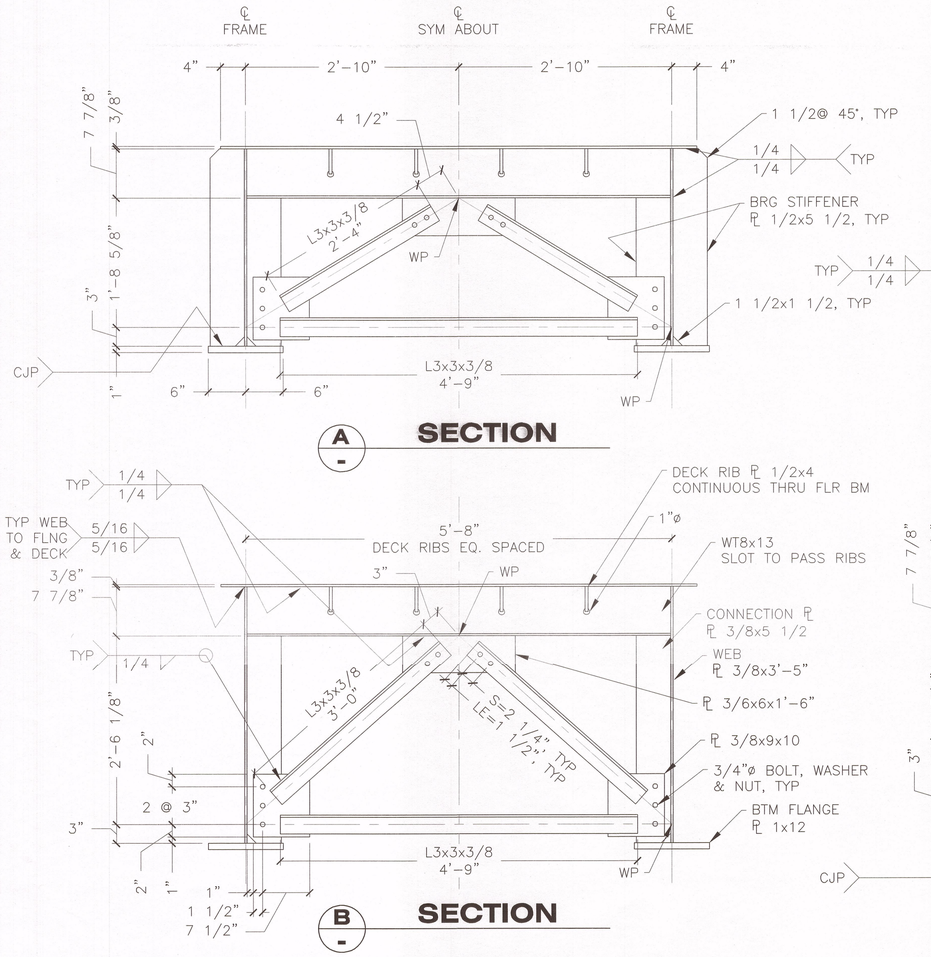

A/- SECTION

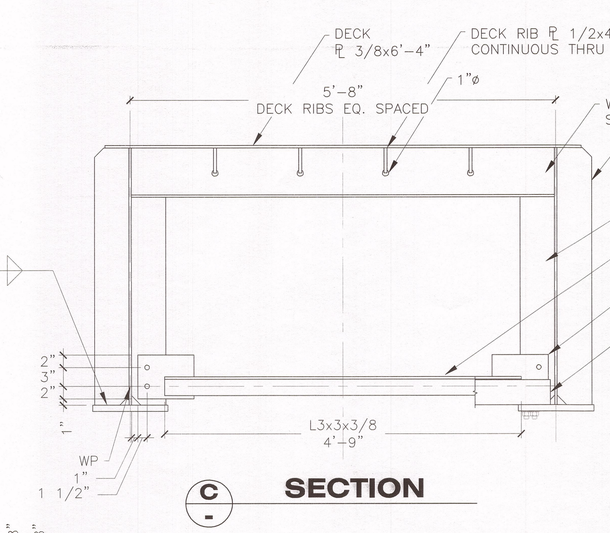

C/- SECTION

B/- SECTION

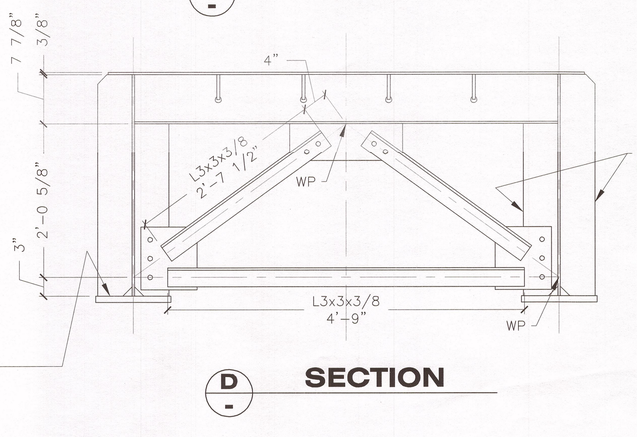

D/- SECTION

NOTES: FOLLOWING APPLY TO PEDESTRIAN BRIDGE

DESIGN SPECIFICATIONS:

AASHTO LRFD GUIDE SPECIFICATIONS FOR THE DESIGN OF PEDESTRIAN BRIDGES – 2009
AISC STEEL CONSTRUCTION MANUAL 14TH ED
AISC DESIGN MANUAL FOR ORTHOTROPIC STEEL PLATE DECK BRIDGES – 1963
ASCE 7 MINIMUM DESIGN LOADS FOR BUILDINGS AND OTHER STRUCTURES

DESIGN BASIS:

LIVE LOAD = 90 PSF
BASIC WIND SPEED = 130 MPH
EXPOSURE CATEGORY D, ENCLOSED
GROUND SNOW LOAD = 55 PSF
LL DEFLECTION CRITERIA = SPAN/360

MATERIALS: ALL STEEL SHALL BE PRODUCED DOMESTICALLY (BUY AMERICA)

DECK, WEB, FLANGE, & MISC. PL	ASTM A709 GR 50
CROSS FRAMES, DIAPHRAGMS, LATERAL BRACING	ASTM A709 GR 50
W, WT SECTIONS	ASTM A992
HOLLOW STRUCTURAL SECTIONS	ASTM A500 GR B
PIPE	ASTM A53 GR B
HEX HD BOLTS, WASHERS & NUTS	ASTM 325 TYPE 1, F436 & A563
STEEL SHEET METAL (GALVANIZED)	ASTM A653 G-90
PINS (OVER 4"ø)	ASTM A668 CLASS F (Fy=50 KSI)
LAMINATED COMPOSITE WEAR PAD	POLYESTER TEXTILE, RESIN & LUBRICANT

ALL STRUCTURAL STEEL DESIGNATED AS "F" ON THE PLANS ARE TENSION COMPONENTS OF FRACTURE CRITICAL MEMBERS. THESE COMPONENTS SHALL COMPLY WITH CHARPY V-NOTCH TESTING FOR TEMP ZONE 2 IN ACCORDANCE WITH ASTM A709 – TABLE 9.

STEEL FABRICATION:
STEEL FABRICATOR SHALL BE AN AISC CERTIFIED PLANT, CATEGORY IBR (CERTIFIED BRIDGE FABRICATOR – INTERMEDIATE).

WELDING:

WELDING DETAILS AND WELDING OPERATIONS SHALL BE IN ACCORDANCE WITH THE CURRENT EDITION OF AWS D1.5 BRIDGE WELDING CODE AND AWS D1.1 STRUCTURAL WELDING CODE – STEEL. WELDING PROCEDURES SHALL BE SUBMITTED AND APPROVED PRIOR TO WELDING ON PROJECT.

SPLICES IN DECK, WEBS, RIBS, AND FLANGES SHALL BE CJP GROOVE WELDS. SPLICES BETWEEN SECTIONS OF BUILT-UP GIRDERS SHALL PREFERABLY BE MADE IN A SINGLE TRANSVERSE PLANE. SHOP SPLICES OF WEBS AND FLANGES MADE BEFORE THE WEBS AND FLANGES ARE JOINED TO EACH OTHER MAY BE LOCATED IN A SINGLE TRANSVERSE PLANE OR MULTIPLE TRANSVERSE PLANES. NO SPLICES PERMITTED IN MIDDLE THIRD OF SPAN.

FABRICATOR SHALL PROVIDE NDT EXAMINATION IN ACCORDANCE WITH AWS D1.5 – 6.7.1 & 6.7.2 FOR THE FOLLOWING:
1. CJP BUTT SPLICES IN BOTTOM FLANGES AND WEBS
2. FILLET WELDS JOINING WEB TO BOTTOM FLANGE

BOLTED CONNECTIONS:

UNLESS OTHERWISE NOTED, ALL BOLTED CONNECTIONS SHALL USE 3/4" DIAMETER ASTM A325 BOLTS INSTALLED PER THE RESEARCH COUNCIL ON STRUCTURAL CONNECTIONS (RCSC). HIGH STRENGTH BOLTS SHALL BE PRETENSIONED USING LOAD INDICATING WASHERS. HARDENED AND/OR PLATE WASHERS ARE REQUIRED AT SLOTTED AND OVERSIZE HOLES. PLACE ALL WASHERS ON PAINTED SIDE OF JOINT.

PROTECTIVE COATINGS:

UNDERSIDE OF DECK AND BELOW SHALL BE SPRAY METALIZED AND COATED IN CONFORMANCE WITH SECTION 513 – SYSTEM 10, SSPC-CS 23.00 & AWS C2.18.

TOP OF DECK SHALL BE COATED WITH EPOXY NON-SKID IN CONFORMANCE WITH SECTION 513 – SYSTEM 7A.

TRANSITION PLATES SHALL BE GALVANIZED AND THEN TOP SURFACE COATED WITH EPOXY NON-SKID IN CONFORMANCE WITH SECTION 513 – SYSTEM 7A.

MISCELLANEOUS SHAPES, CROSS FRAMES, BRACING, & PLATES THAT ARE BOLTED TO BRIDGE GIRDERS SHALL BE HOT DIP GALVANIZED IN CONFORMANCE WITH ASTM A123.

DRAWING SCALES ARE FOR FULL-SIZE SHEETS. IF NO SCALE SHOWN, USE DIMENSIONS.

Record Drawings have been reviewed by the Project Engineer, and represent to the best of my knowledge, the project as constructed.
PE [signature] Date 12/10/15

DESIGNED BY: T. DOGGETT
STATE OF ALASKA – TIMOTHY H. DOGGETT – CE-9027 – 49th – PROFESSIONAL ENGINEER
6/16/14
CHECKED BY: STAFF
DRAWN BY: STAFF

STATE OF ALASKA
DEPARTMENT OF TRANSPORTATION & PUBLIC FACILITIES
SOUTHEAST REGION

CLARK BAY FERRY TERMINAL IMPROVEMENTS
130' PEDESTRIAN BRIDGE

PATH: Q:\POW\67449\PLANSET\MF\52-57 – PEDESTRIAN BRIDGE.DWG
TAB: 53 Monday, June 16, 2014 12:30:44 PM LOWELL, DAVID H (DOT)

REVISIONS NO.	DATE	DESCRIPTION

PROJECT DESIGNATION	YEAR	SHEET NO.	TOTAL SHEETS
67449/0924019	2014	53	~~57~~

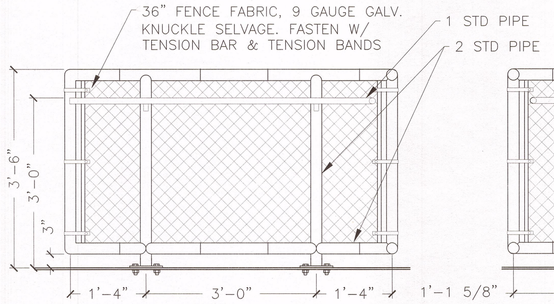

A ELEVATION

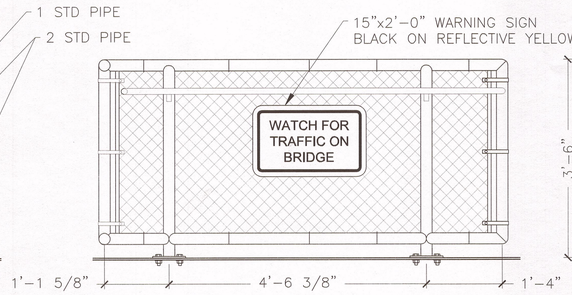

B ELEVATION

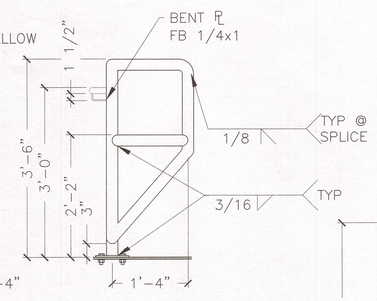

C ELEVATION

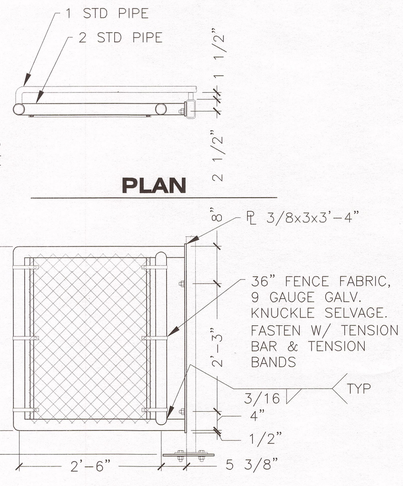

4/54 DETAIL

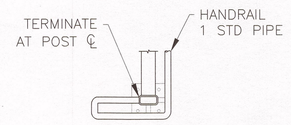



2/54 DETAIL

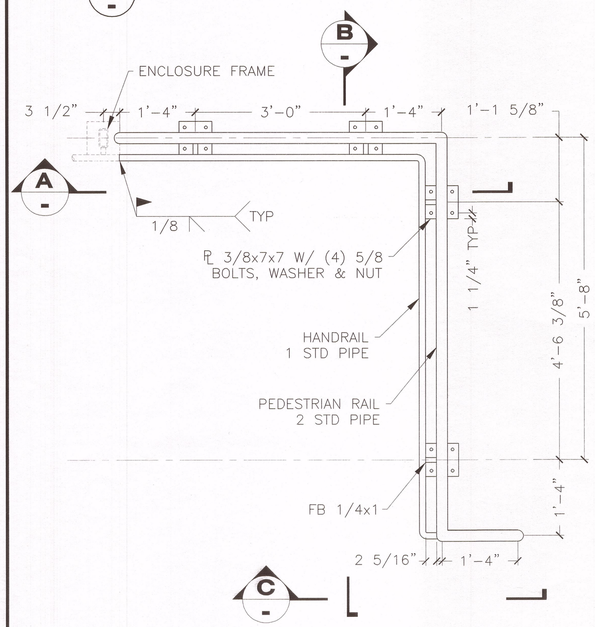

1/54 DETAIL

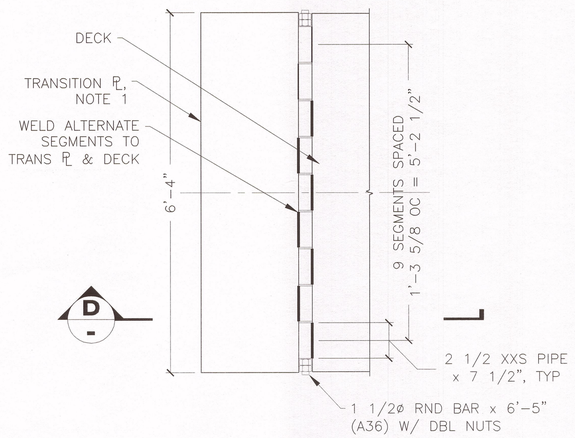

3/54 DETAIL

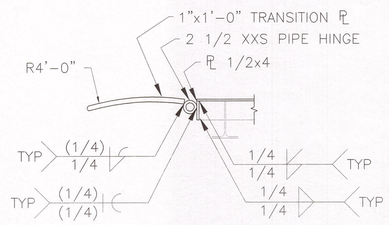

D SECTION

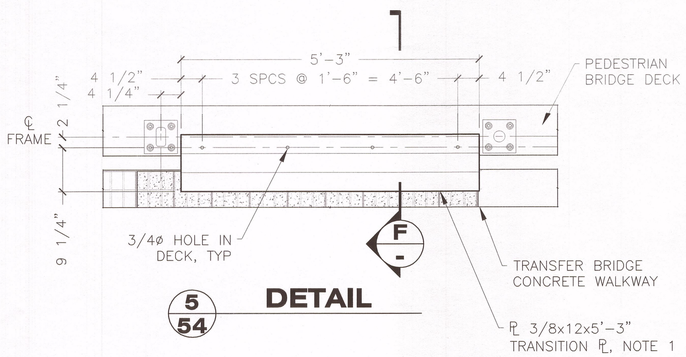

5/54 DETAIL

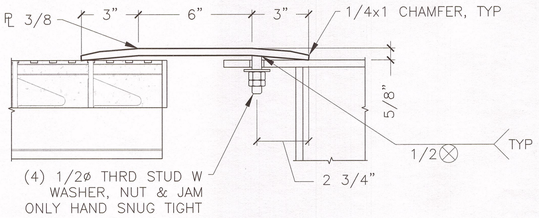

F SECTION

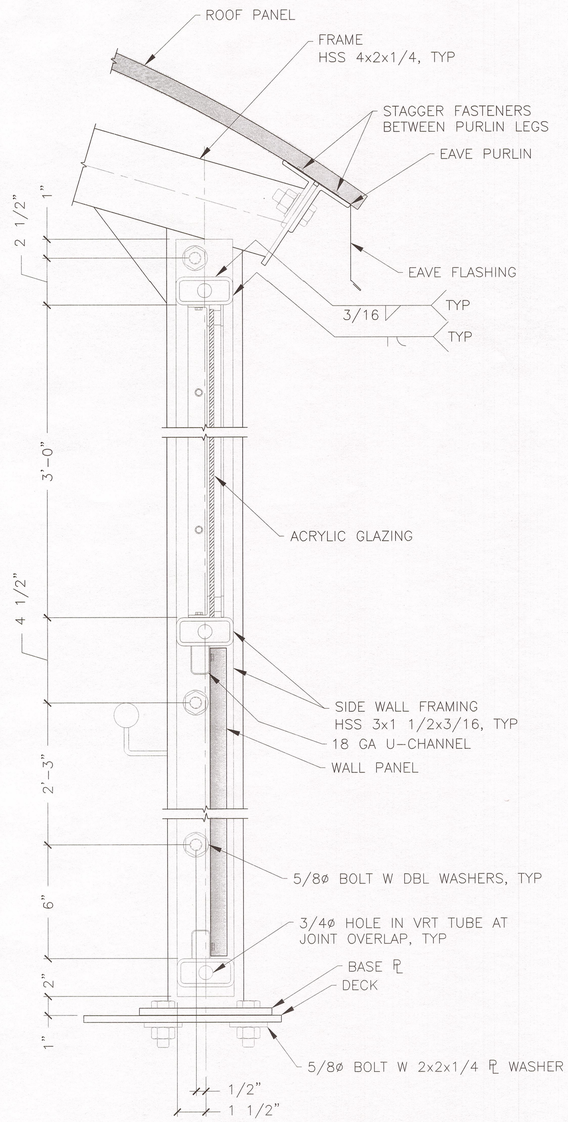

E SECTION SIDE WALL

NOTES:

1. TOP SURFACE OF TRANSITION PLATES SHALL BE COATED IN CONFORMANCE WITH SECTION 513, SYSTEM 7A – EPOXY NON-SKID.
2. PROVIDE 3/8ø WEEP HOLES IN ALL CLOSED TUBES.

Record Drawings have been reviewed by the Project Engineer, and represent to the best of my knowledge, the project as constructed.
PE [signature] Date 12/10/15

DRAWING SCALES ARE FOR FULL-SIZE SHEETS. IF NO SCALE SHOWN, USE DIMENSIONS.

DESIGNED BY: T. DOGGETT
STATE OF ALASKA – TIMOTHY H. DOGGETT – CE-9027 – 49th – REGISTERED PROFESSIONAL ENGINEER – 6/6/14
CHECKED BY: STAFF
DRAWN BY: STAFF

STATE OF ALASKA
DEPARTMENT OF TRANSPORTATION & PUBLIC FACILITIES
SOUTHEAST REGION

CLARK BAY FERRY TERMINAL IMPROVEMENTS
130' PEDESTRIAN BRIDGE

PATH: Q:\POW\67449\PLANSET\MF\52-57 - PEDESTRIAN BRIDGE.DWG
TAB: 54 Friday, June 06, 2014 3:26:36 PM LOWELL, DAVID H (DOT)

REVISIONS NO.	DATE	DESCRIPTION

PROJECT DESIGNATION	YEAR	SHEET NO.	TOTAL SHEETS
67449/0924019	2014	54	~~57~~

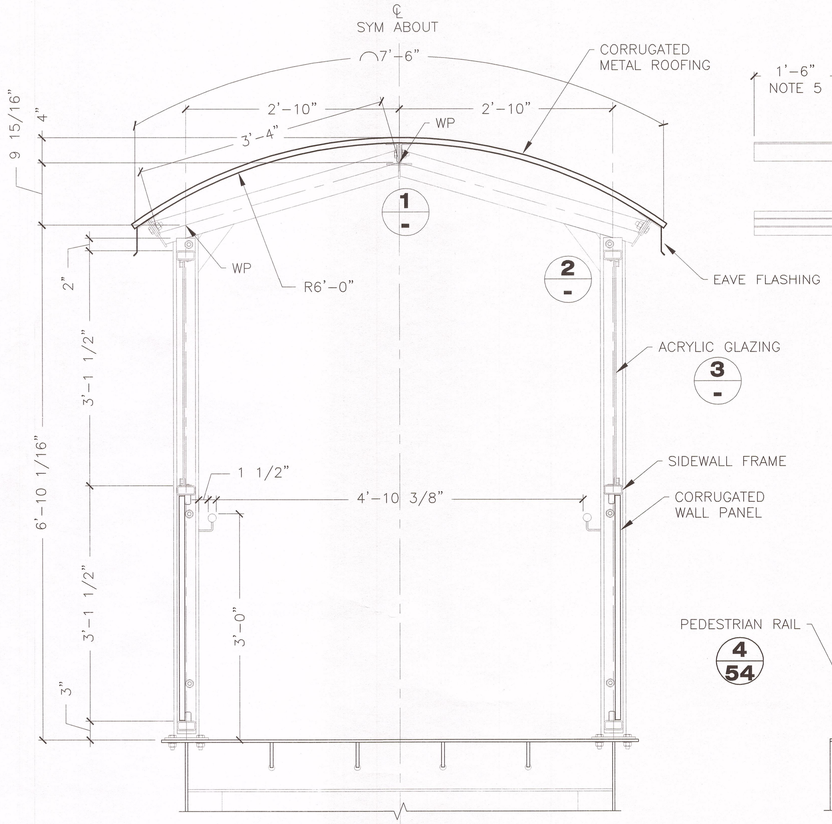

TYPICAL SECTION

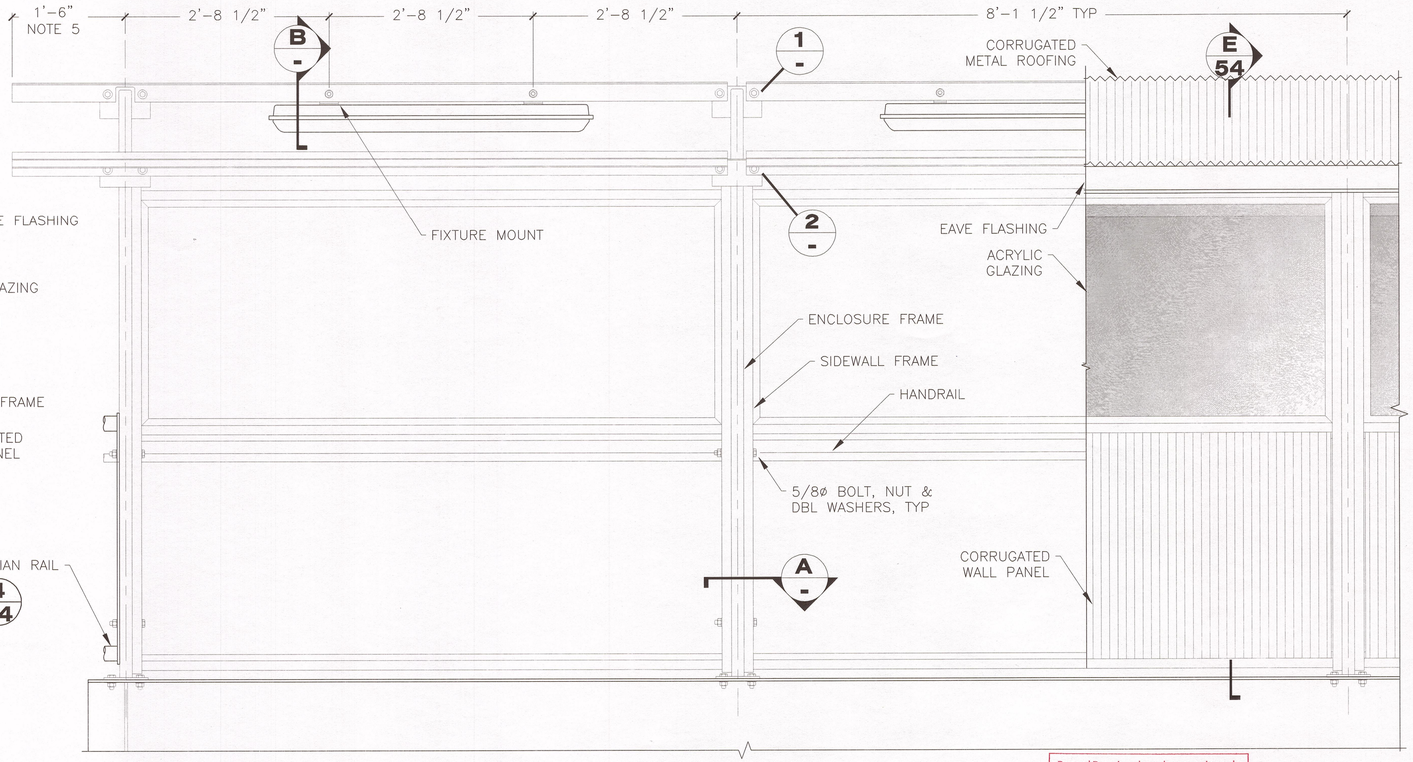

ELEVATION

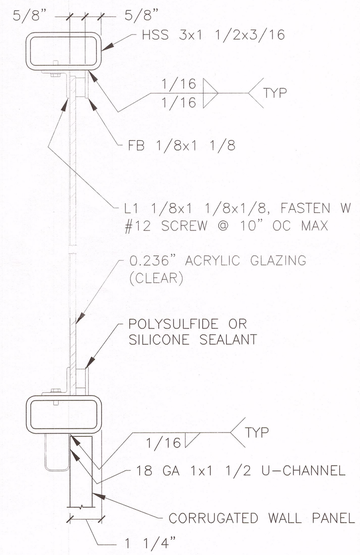

3 - DETAIL ACRYLIC GLAZING

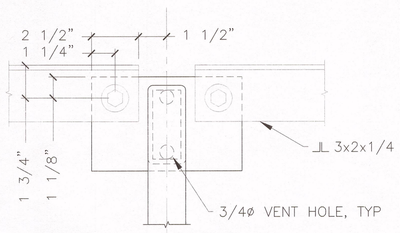

SIDE ELEVATION

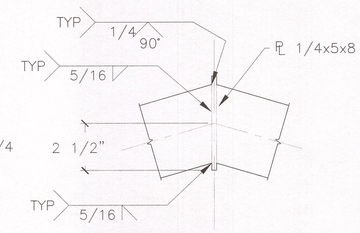

FRONT ELEVATION

1 - DETAIL PEAK

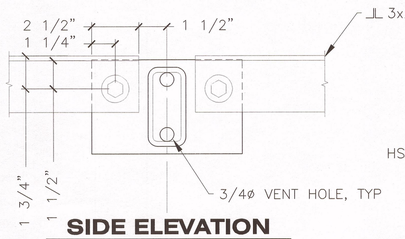

SIDE ELEVATION

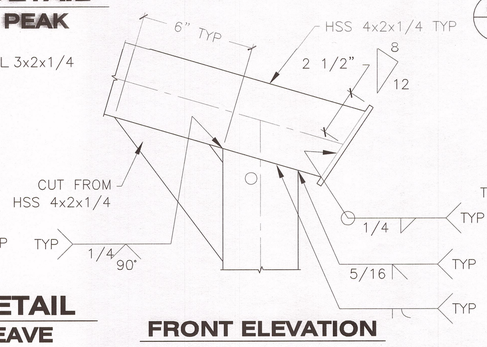

FRONT ELEVATION

2 - DETAIL EAVE

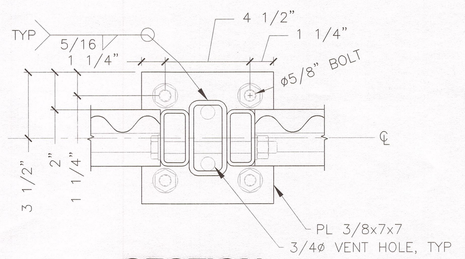

A - SECTION

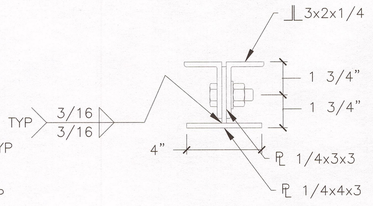

B - SECTION

NOTES:

Record Drawings have been reviewed by the Project Engineer, and represent to the best of my knowledge, the project as constructed.
PE _____ Date 12/10/15

1. ROOF PANELS ARE 24 GA. 7/8" x 2 11/16" CORRUGATED STEEL SHEET METAL WITH 42 3/4" COVERAGE. MACHINE CURVE ROOF PANELS, DO NOT FORM IN THE FIELD.

   WALL PANELS ARE 24 GA. 7/8" x 2 11/16" CORRUGATED STEEL SHEET METAL WITH 45 3/8" COVERAGE.
2. PANELS ROLLED FROM HOT DIP GALVANIZED SHEET METAL PER ASTM A653 – G90.
3. INSTALL USING GALVANIZED FASTENERS OF SIZE AND SPACING RECOMMENDED BY THE PANEL MANUFACTURER, BUT NOT LESS THAN:
   PANEL TO PURLIN #12 – 5/16" HEX HEAD
   PANEL TO 18 GA SUPPORTS #14 – 5/16" HEX HEAD
4. INSTALL WITH SHEETING DIRECTION FROM SEAWARD TO SHORE.
5. LENGTH MAY BE ADJUSTED TO MATCH PANEL LAYOUT.
6. SUBMIT SHOP DRAWINGS OF PANELS, TRIM, INSTALLATION LAYOUT AND FASTENER SCHEDULE FOR REVIEW.

DRAWING SCALES ARE FOR FULL-SIZE SHEETS. IF NO SCALE SHOWN, USE DIMENSIONS.

DESIGNED BY: T. DOGGETT
STATE OF ALASKA · 49th · TIMOTHY H. DOGGETT · CE-9027 · REGISTERED PROFESSIONAL ENGINEER
6/6/14
CHECKED BY: STAFF
DRAWN BY: STAFF

STATE OF ALASKA
DEPARTMENT OF TRANSPORTATION & PUBLIC FACILITIES
SOUTHEAST REGION

CLARK BAY FERRY TERMINAL IMPROVEMENTS
130' PEDESTRIAN BRIDGE

PATH: Q:\POW\67449\PLANSET\MF\52-57 – PEDESTRIAN BRIDGE.DWG
TAB: 55 Friday, June 06, 2014 3:27:04 PM LOWELL, DAVID H (DOT)

REVISIONS NO.	DATE	DESCRIPTION	PROJECT DESIGNATION	YEAR	SHEET NO.	TOTAL SHEETS
			67449/0924019	2014	55	~~57~~

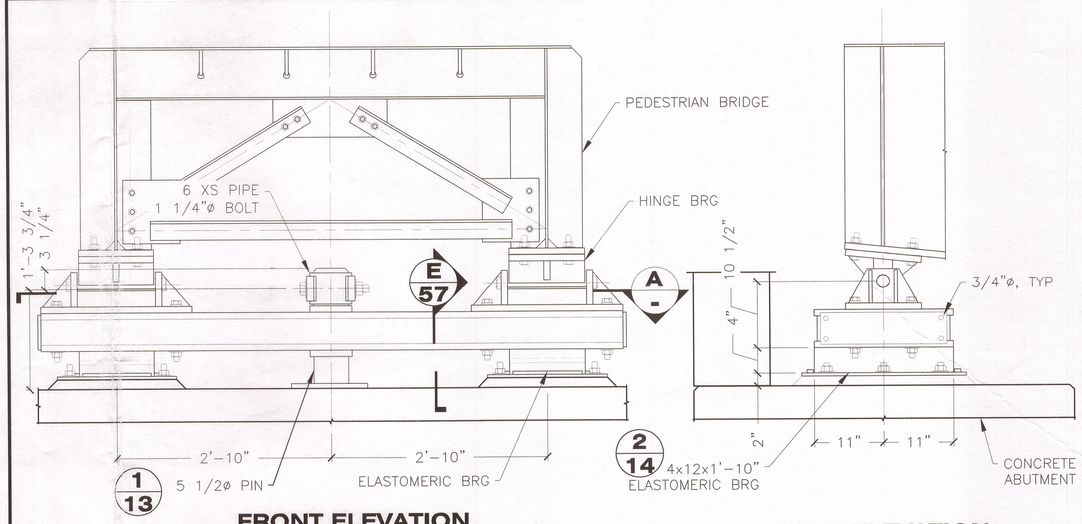

FRONT ELEVATION **SIDE ELEVATION**

1/56 DETAIL SHOREWARD BEARING

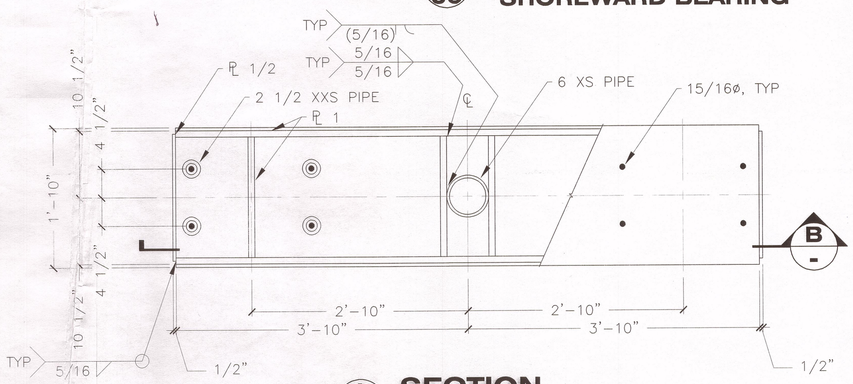

A - SECTION

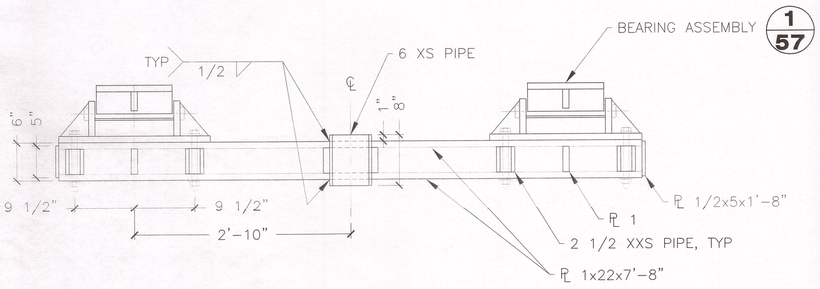

B - SECTION

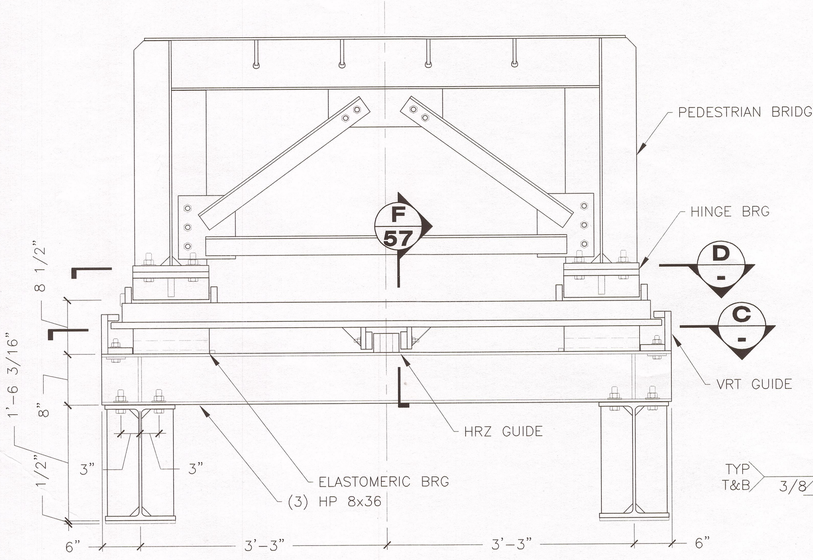

FRONT ELEVATION

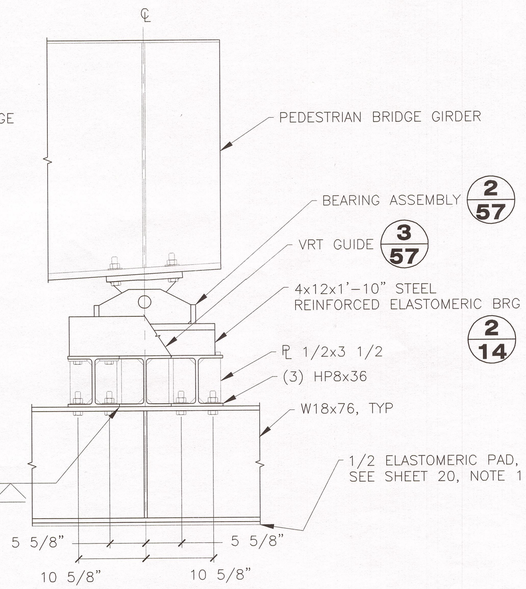

SIDE ELEVATION

2/56 DETAIL SEAWARD BEARING

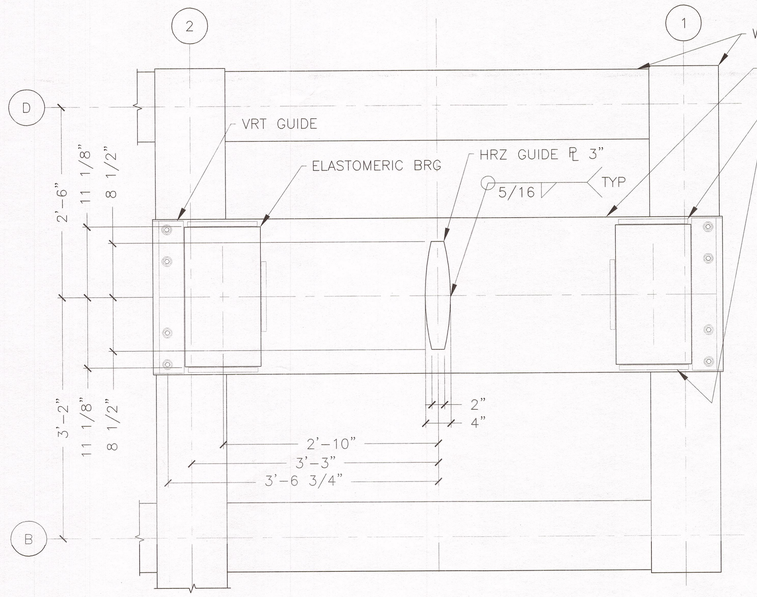

C - PLAN

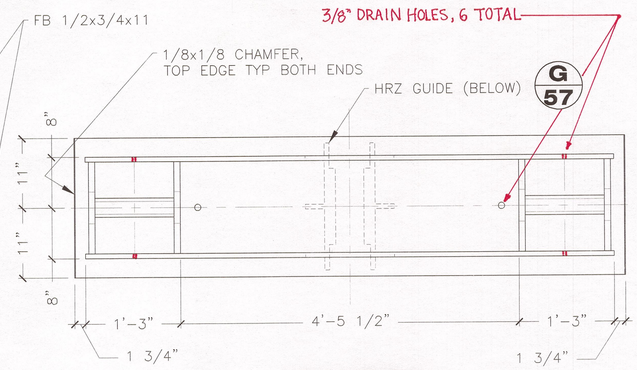

D - SECTION

DRAWING SCALES ARE FOR FULL-SIZE SHEETS. IF NO SCALE SHOWN, USE DIMENSIONS.

Record Drawings have been reviewed by the Project Engineer, and represent to the best of my knowledge, the project as constructed.
PE _____ Date 12/10/15

DESIGNED BY: T. DOGGETT
STATE OF ALASKA 49th TIMOTHY H. DOGGETT CE-9027 REGISTERED PROFESSIONAL ENGINEER
6/16/14
CHECKED BY: STAFF
DRAWN BY: STAFF

STATE OF ALASKA
DEPARTMENT OF TRANSPORTATION & PUBLIC FACILITIES
SOUTHEAST REGION

CLARK BAY FERRY TERMINAL IMPROVEMENTS
130' PEDESTRIAN BRIDGE

PATH: Q:\POW\67449\PLANSET\MF\52-57 - PEDESTRIAN BRIDGE.DWG
TAB: 56 Monday, June 16, 2014 12:31:16 PM LOWELL, DAVID H (DOT)

REVISIONS NO.	DATE	DESCRIPTION

PROJECT DESIGNATION	YEAR	SHEET NO.	TOTAL SHEETS
67449/0924019	2014	56	~~57~~

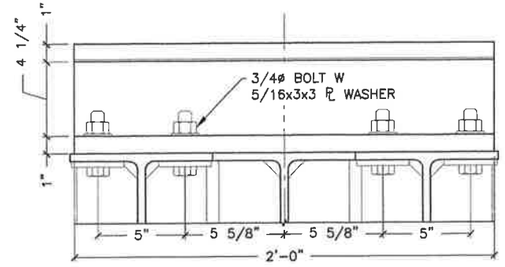

SIDE ELEVATION

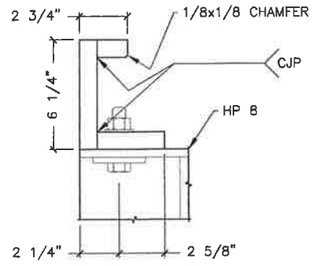

TYP SECTION

3/57 DETAIL VRT GUIDE

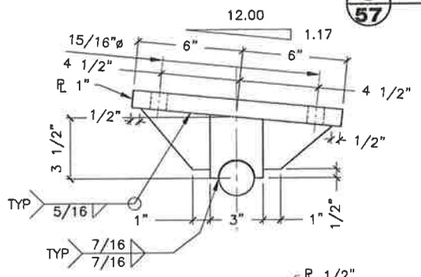

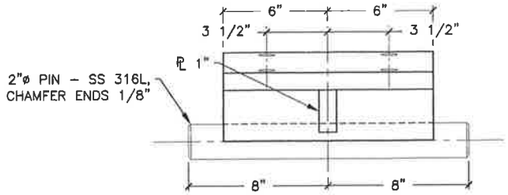

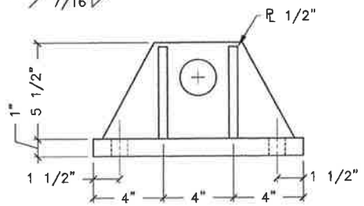

SIDE ELEVATION

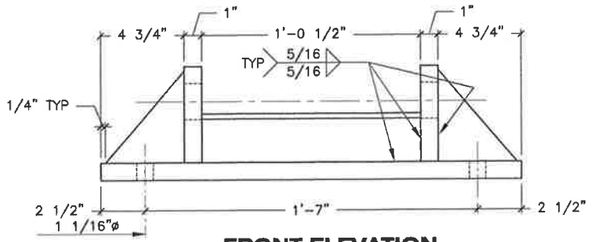

FRONT ELEVATION

1/57 DETAIL SHOREWARD BEARING

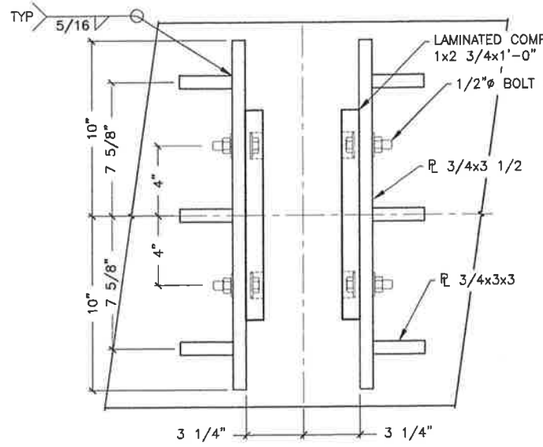

G/57 REFLECTED PLAN HRZ GUIDE

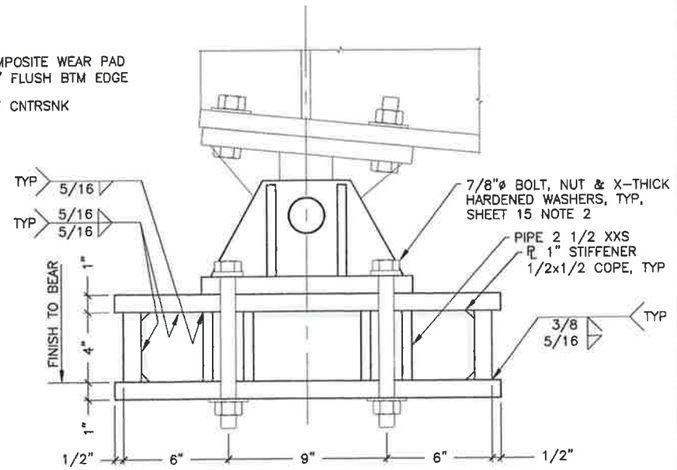

E/57 SECTION

ASSEMBLE BY WELDING STIFFENERS & PIPE SECTIONS TO TOP & SIDE PLATES FIRST AND THEN INSTALL BOTTOM PLATE LAST.

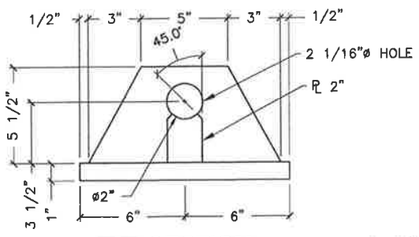

TYP SECTION

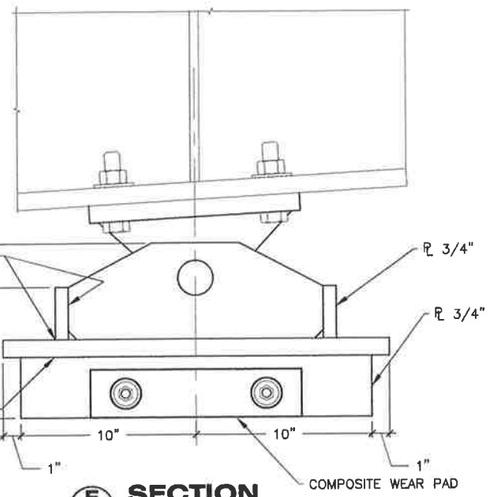

F/57 SECTION

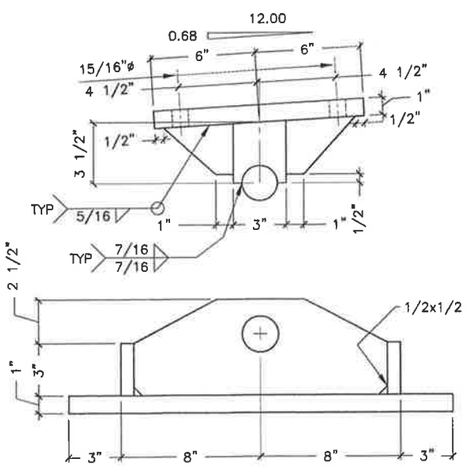

SIDE ELEVATION

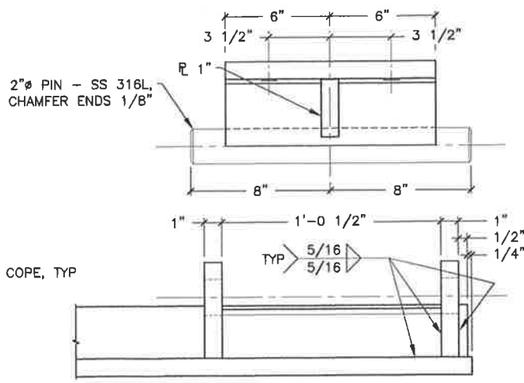

FRONT ELEVATION

2/57 DETAIL SEAWARD BEARING

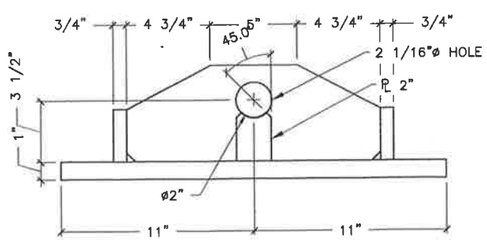

TYP SECTION

Record Drawings have been reviewed by the Project Engineer, and represent to the best of my knowledge, the project as constructed.

PE _____ Date 12/10/15

DRAWING SCALES ARE FOR FULL-SIZE SHEETS. IF NO SCALE SHOWN, USE DIMENSIONS.

DESIGNED BY: T. DOGGETT

STATE OF ALASKA
DEPARTMENT OF TRANSPORTATION
& PUBLIC FACILITIES
SOUTHEAST REGION

CLARK BAY FERRY TERMINAL IMPROVEMENTS
130' PEDESTRIAN BRIDGE

STATE OF ALASKA 49th TIMOTHY H. DOGGETT CE-9027 REGISTERED PROFESSIONAL ENGINEER
6/16/14

CHECKED BY: STAFF
DRAWN BY: STAFF

PATH: Q:\POW\67449\PLANSET\MF\52-57 - PEDESTRIAN BRIDGE.DWG
TAB: 57 Monday, June 16, 2014 12:31:41 PM LOWELL, DAVID H (DOT)

REVISIONS NO.	DATE	DESCRIPTION	PROJECT DESIGNATION	YEAR	SHEET NO.	TOTAL SHEETS
			67449/0924019	2014	57	~~57~~

61

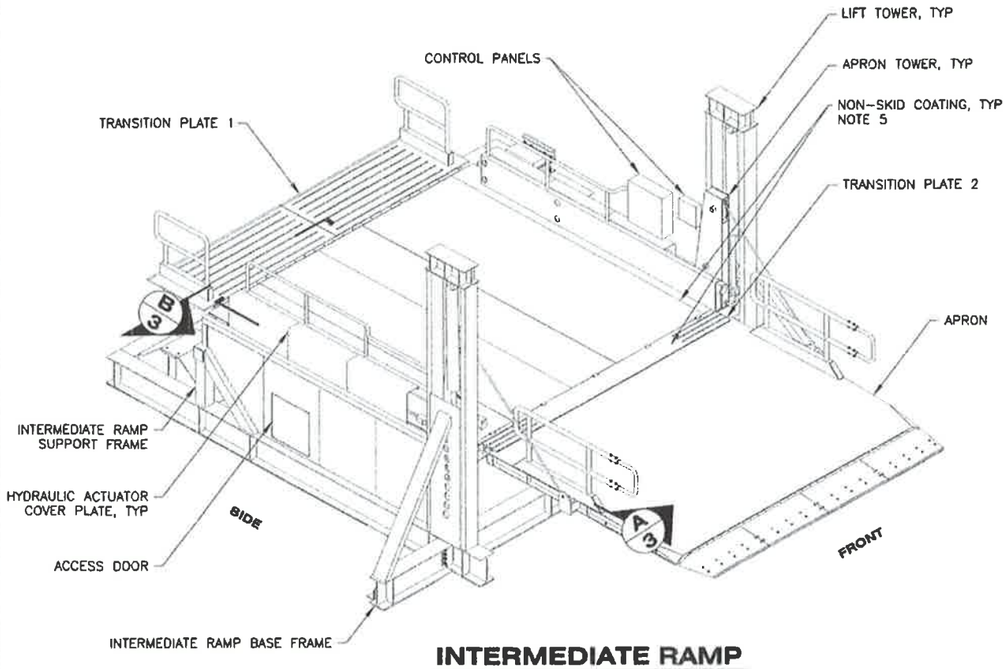

INTERMEDIATE RAMP
ISOMETRIC

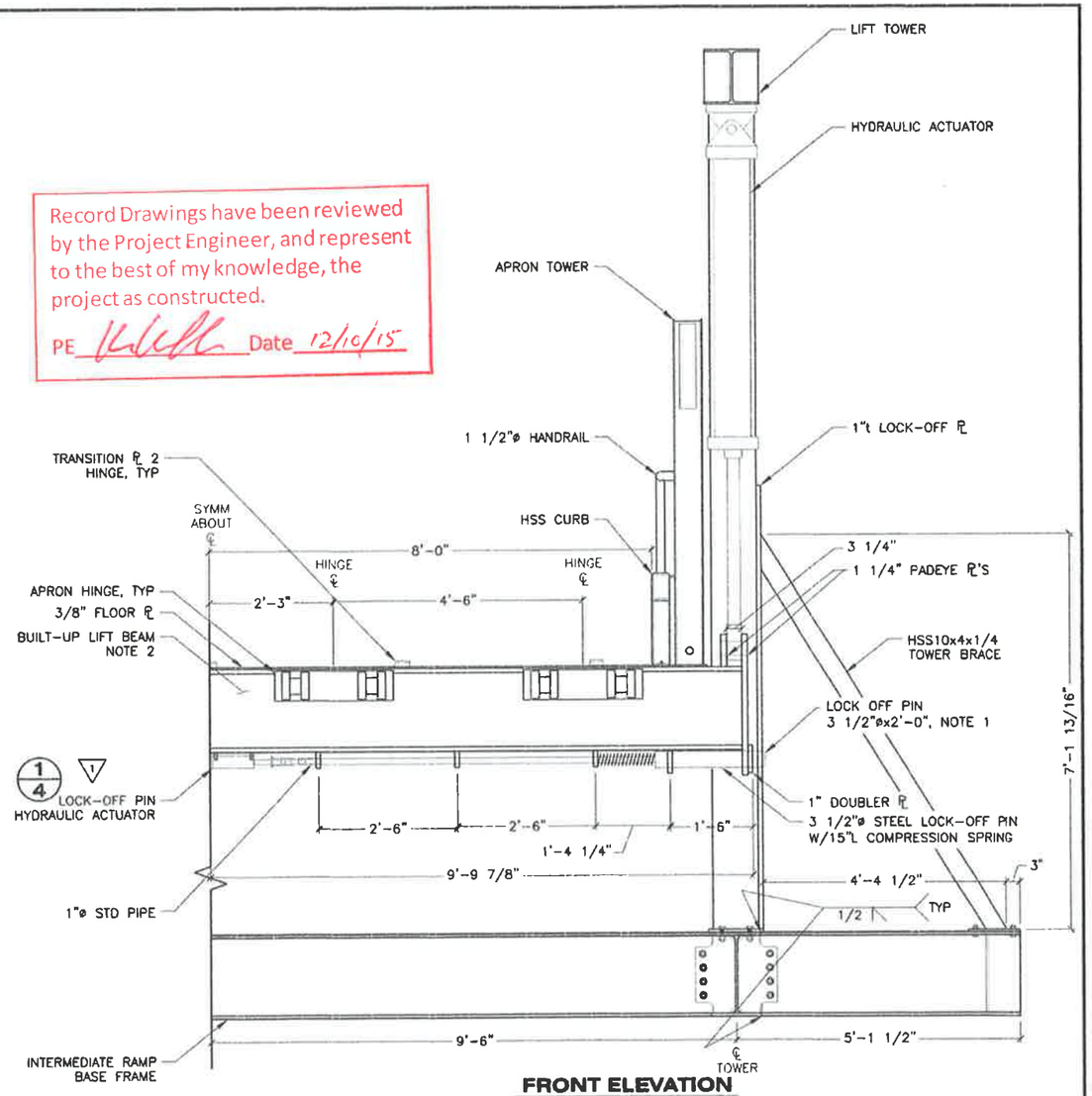

FRONT ELEVATION
NOTE: APRON NOT SHOWN FOR CLARITY.

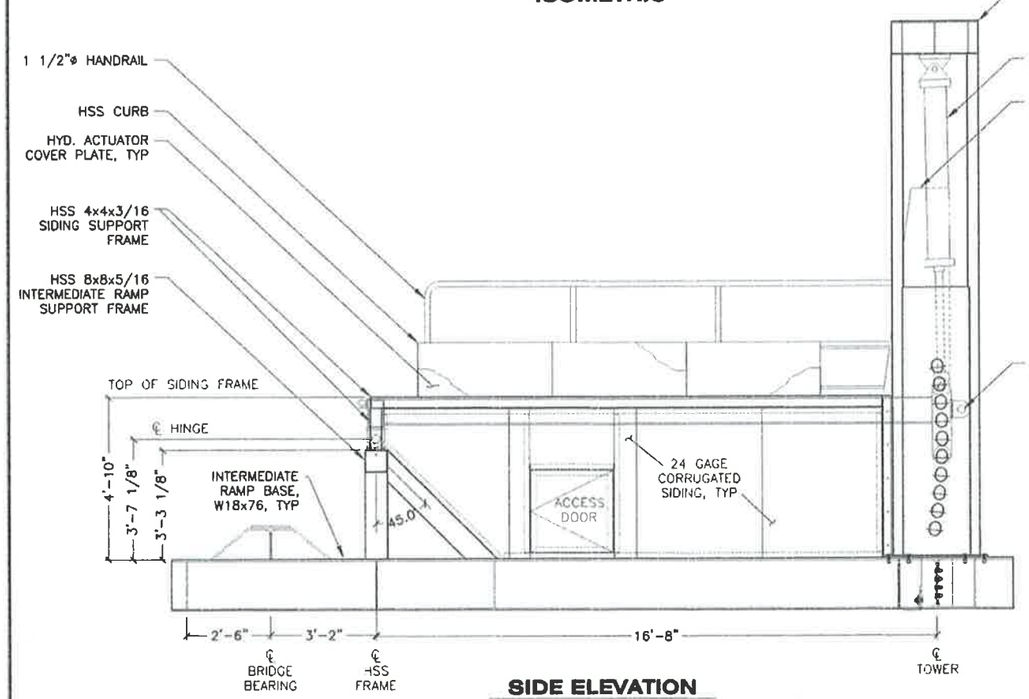

SIDE ELEVATION
NOTE: APRON AND TRANSITION PLATES NOT SHOWN FOR CLARITY.

NOTE:
1. LOCK-OFF PIN IS ASTM A108 GR1016 THRU 1030, MIN Fy=50 KSI.
2. BUILT-UP LIFT BEAM IS A FRACTURE CRITICAL, MAIN LOAD CARRYING MEMBER. BUILT-UP BEAM TO BE FABRICATED USING ASTM A709 GR36 AND WEBS & BTM FLANGE SHALL COMPLY WITH CVN REQUIREMENTS – CATEGORY F2. MATERIALS AND FABRICATION IN ACCORDANCE WITH REQUIREMENTS OF AWS D1.5, SECTION 12.
3. WT 9x23 DECK BEAMS ARE REDUNDANT, MAIN LOAD CARRYING MEMBERS. DECK BEAMS ARE ASTM A709 GR 50, CVN CATEGORY T2.
4. COORDINATE HYDRAULIC ACTUATOR MOUNTING DETAILS & DIMENSIONS W/ ACTUATOR SUPPLIER.
5. NON-SKID COATING SHALL BE SYSTEM 7A.
6. ALL COMPONENTS SHALL BE HOT-DIPPED GALVANIZED, UNO.
7. ALL WELDS 5/16" FILLET, UNO.

Record Drawings have been reviewed by the Project Engineer, and represent to the best of my knowledge, the project as constructed.
PE _____ Date 12/10/15

DRAWING SCALES ARE FOR FULL-SIZE SHEETS. IF NO SCALE SHOWN, USE DIMENSIONS.

DESIGNED BY: T. DOGGETT
DRAWN BY: STAFF
CHECKED BY: STAFF
12/24/15

STATE OF ALASKA
DEPARTMENT OF TRANSPORTATION
& PUBLIC FACILITIES
SOUTHEAST REGION

CLARK BAY FERRY TERMINAL IMPROVEMENTS

INTERMEDIATE RAMP

PATH: Q:\POW\67449\PLANSET\REVISED DWGS\INTERMEDIATE RAMP\INTERMEDIATE RAMP _R1.DWG
TAB 1 Friday, January 23, 2015 6:48:33 PM DOGGETT, TIMOTHY H (DOT)

PROVISIONS NO.	DATE	DESCRIPTION	PROJECT: DESIGNATION	YEAR	SHEET NO.	TOTAL SHEETS
1	1/21/15	HYD CYL DIM CHECK	67449/0924019	2014	~~1~~	~~4~~

58 61

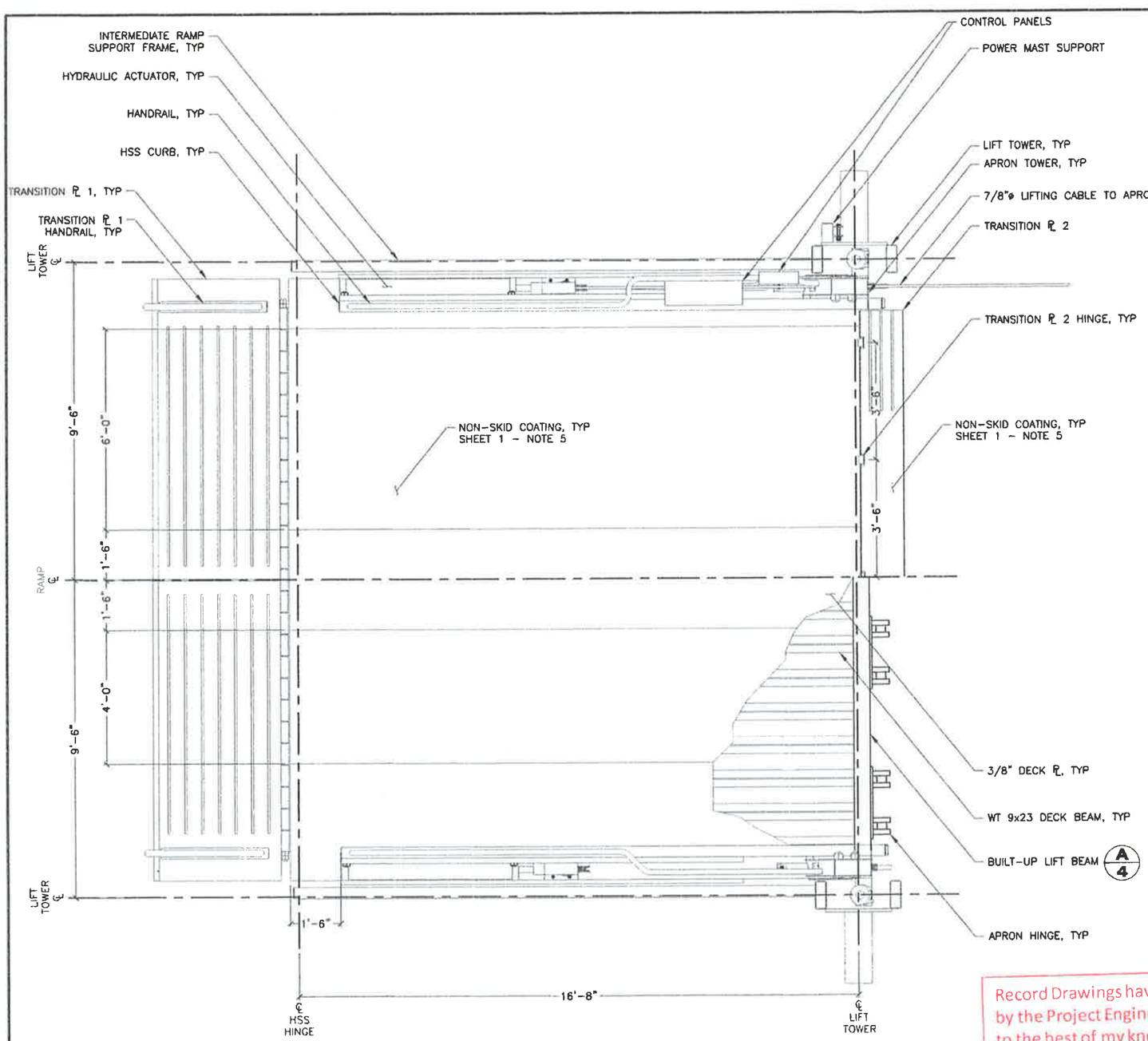

INTERMEDIATE RAMP
PLAN

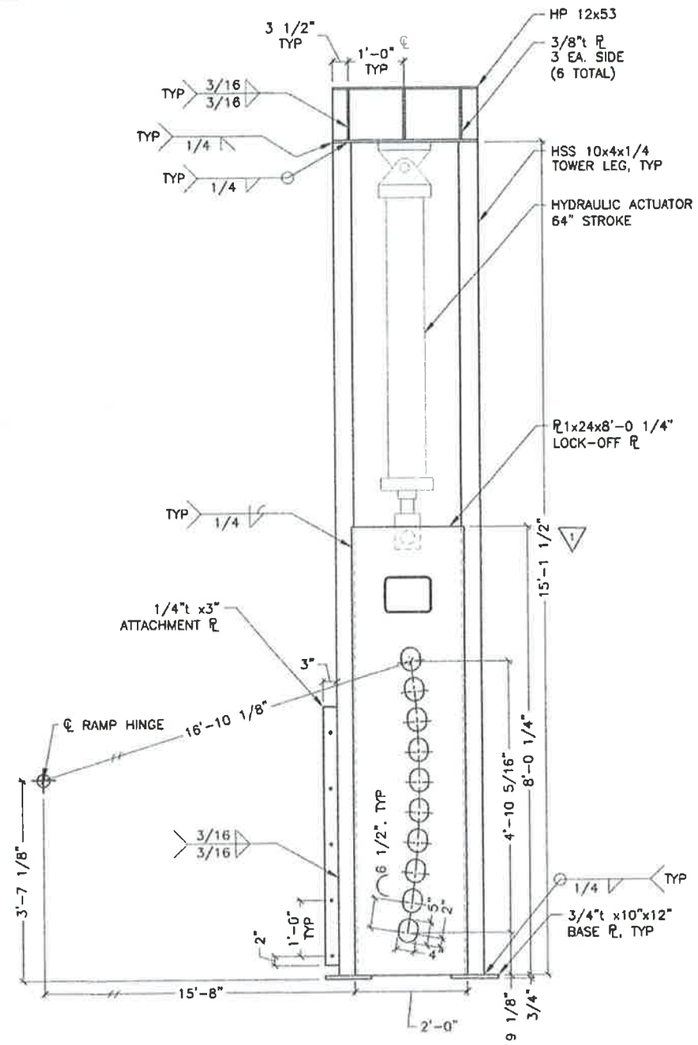

LIFT TOWER
SIDE VIEW

DRAWING SCALES ARE FOR FULL-SIZE SHEETS. IF NO SCALE SHOWN, USE DIMENSIONS.

Record Drawings have been reviewed by the Project Engineer, and represent to the best of my knowledge, the project as constructed.

PE _____ Date 12/10/15

DESIGNED BY: T. DOGGETT
STATE OF ALASKA 49th TIMOTHY H. DOGGETT CE-9027 REGISTERED PROFESSIONAL ENGINEER
12/24/15
CHECKED BY: STAFF
DRAWN BY: STAFF

STATE OF ALASKA
DEPARTMENT OF TRANSPORTATION & PUBLIC FACILITIES
SOUTHEAST REGION

CLARK BAY FERRY TERMINAL IMPROVEMENTS

INTERMEDIATE RAMP

PATH: Q:\POW\67449\PLANSET\REVISED DWGS\INTERMEDIATE RAMP\INTERMEDIATE RAMP _R1.DWG
TAB: 2 Friday, January 23, 2015 6:49:45 PM DOGGETT, TIMOTHY H (DOT)

REVISIONS NO.	DATE	DESCRIPTION
1	1/21/15	HYD CYL DIM CHECK

PROJECT DESIGNATION	YEAR	SHEET NO.	TOTAL SHEETS
67449/0924019	2014	~~2~~ 59	~~4~~ 61

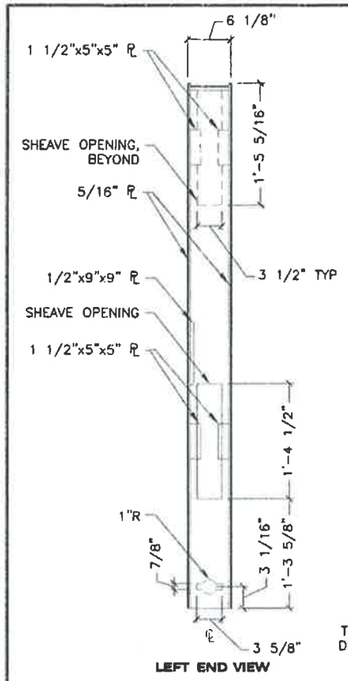

LEFT END VIEW

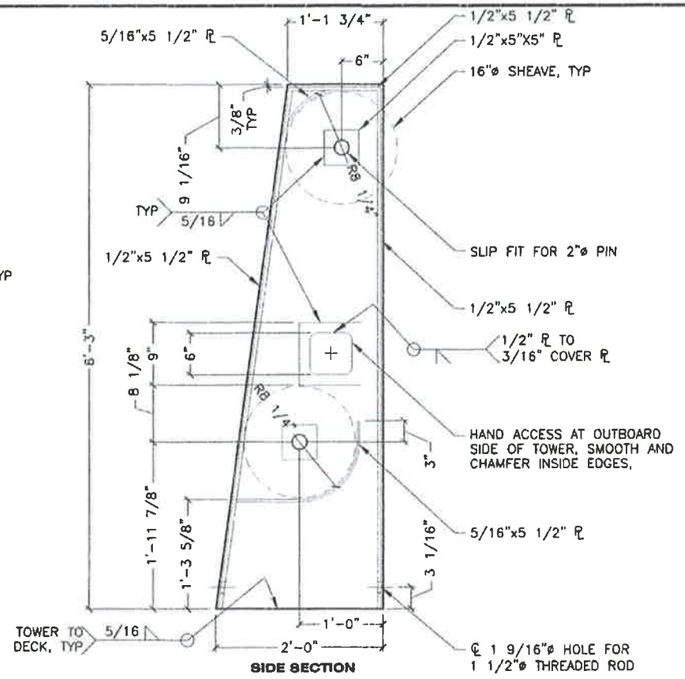

SIDE SECTION

APRON TOWER

NOTES:
1. COORDINATE HYDRAULIC ACTUATOR MOUNTING DETAILS & DIMENSIONS W/ ACTUATOR SUPPLIER.
2. SHEAVE SHALL BE 16"O.D., 13"ø TREAD, 2 5/16" HUB WIDTH, BUSHED FOR 2"ø PIN, BRONZE. CONTRACTOR TO SUBMIT FOR APPROVAL.

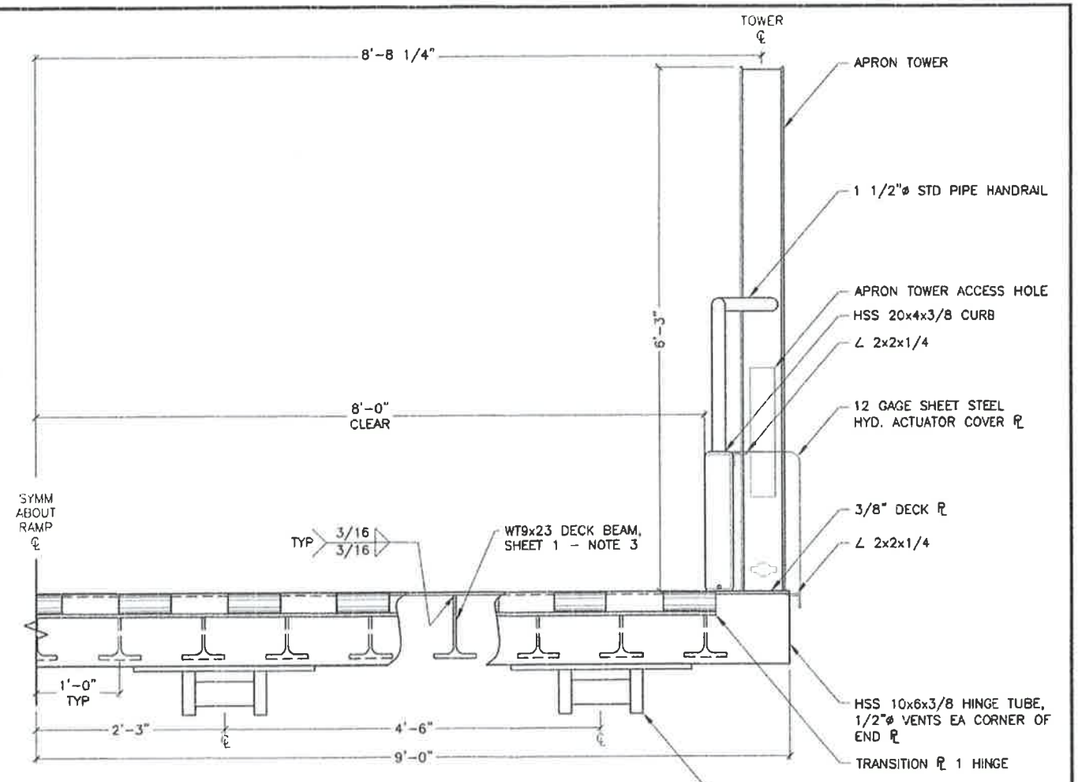

B SECTION
NOTE: HYD. ACTUATOR NOT SHOWN FOR CLARITY.

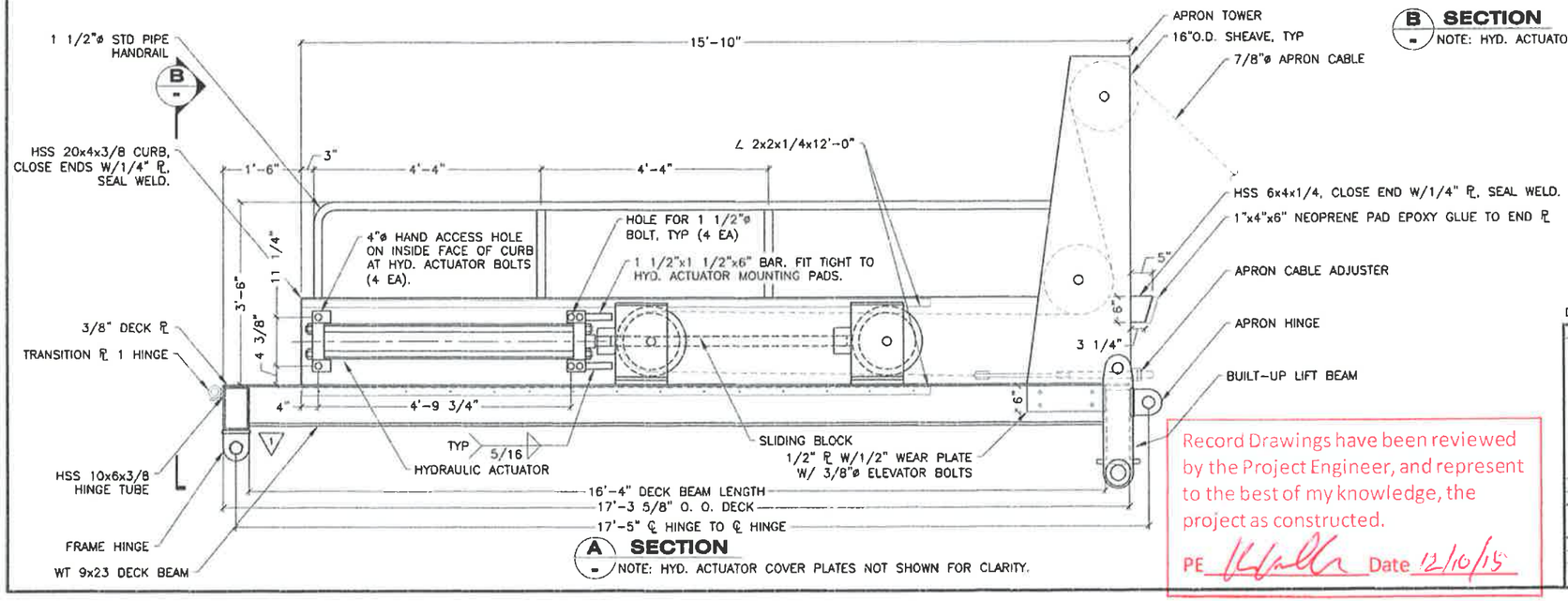

A SECTION
NOTE: HYD. ACTUATOR COVER PLATES NOT SHOWN FOR CLARITY.

Record Drawings have been reviewed by the Project Engineer, and represent to the best of my knowledge, the project as constructed.

PE _____ Date 12/10/15

DRAWING SCALES ARE FOR FULL-SIZE SHEETS. IF NO SCALE SHOWN, USE DIMENSIONS.

DESIGNED BY: T. DOGGETT	STATE OF ALASKA DEPARTMENT OF TRANSPORTATION & PUBLIC FACILITIES SOUTHEAST REGION
CHECKED BY: STAFF	**CLARK BAY FERRY TERMINAL IMPROVEMENTS**
DRAWN BY: STAFF	**INTERMEDIATE RAMP**

STATE OF ALASKA · TIMOTHY H. DOGGETT · CE-9027 · REGISTERED PROFESSIONAL ENGINEER · 49th · 12/24/15

PATH: Q:\POW\67449\PLANSET\REVISED DWGS\INTERMEDIATE RAMP\INTERMEDIATE RAMP _R1.DWG
TAB: 3 Friday, January 23, 2015 6:50:25 PM DOGGETT, TIMOTHY H (DOT)

REVISIONS NO.	DATE	DESCRIPTION	PROJECT DESIGNATION	YEAR	SHEET NO.	TOTAL SHEETS
1	1/21/15	HYD CYL DIM CHECK	67449/0924019	2014	~~3~~	~~4~~

60 61

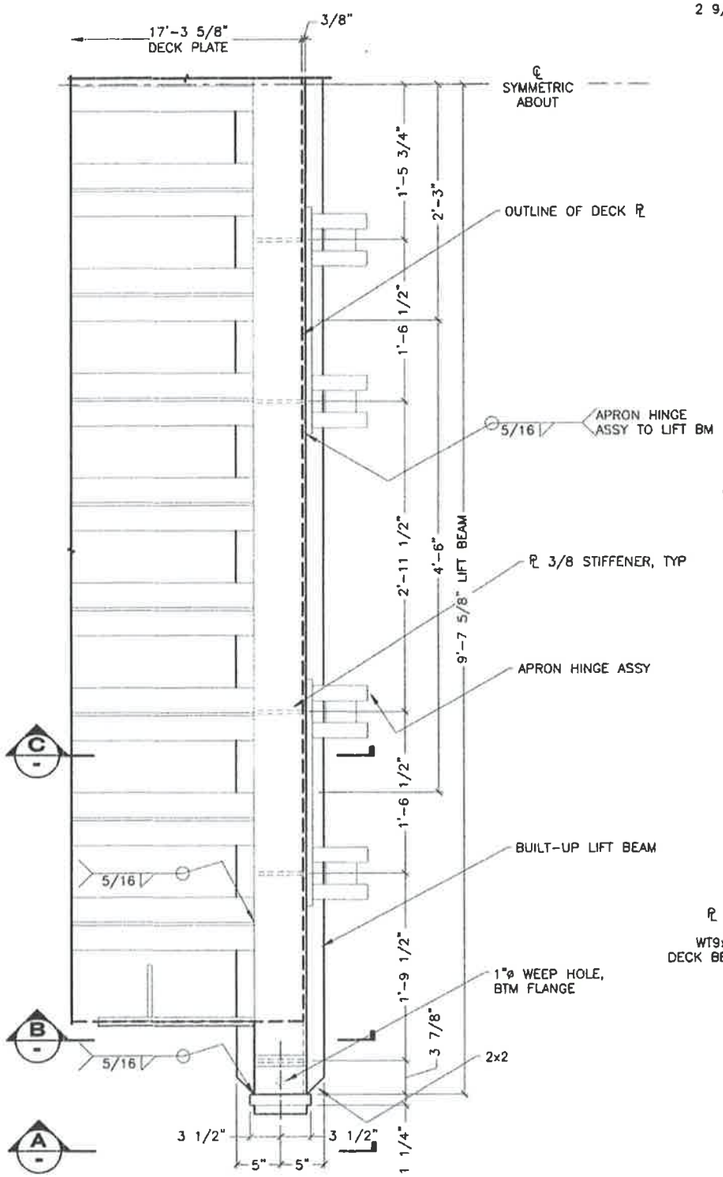

A PARTIAL PLAN
4

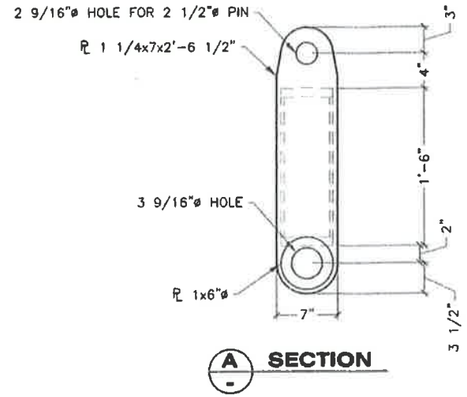

A SECTION
-

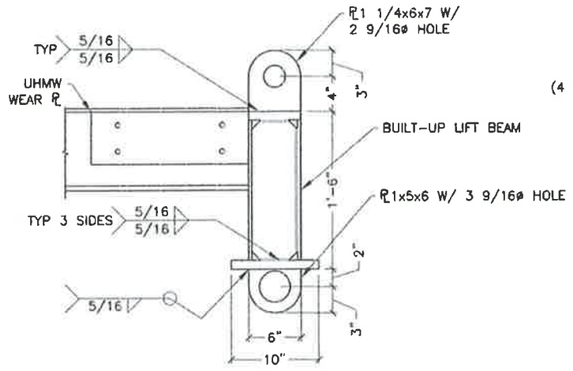

B SECTION
-

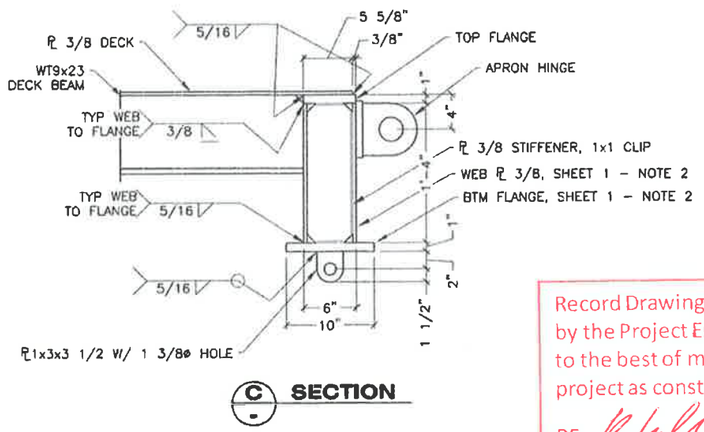

C SECTION
-

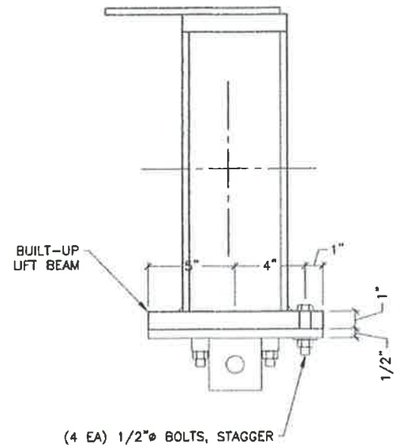

SECTION

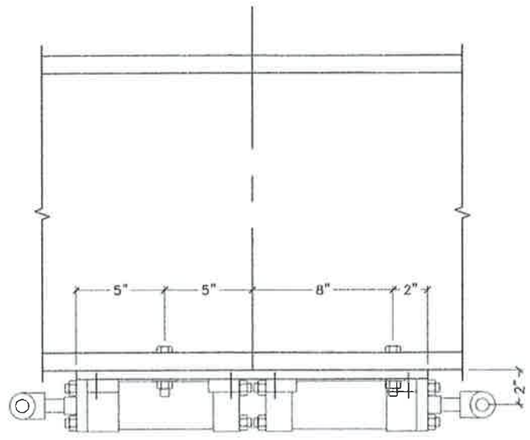

ELEVATION

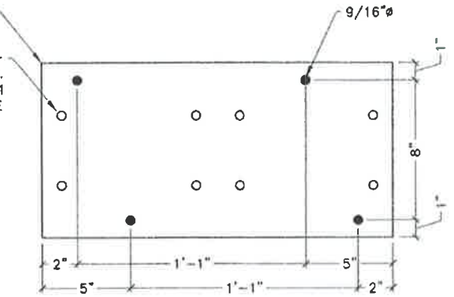

PLAN

1 DETAIL
1 LOCK-OFF ACTUATOR

DRAWING SCALES ARE FOR FULL-SIZE SHEETS. IF NO SCALE SHOWN, USE DIMENSIONS.

Record Drawings have been reviewed by the Project Engineer, and represent to the best of my knowledge, the project as constructed.

PE _____ Date 12/10/15

DESIGNED BY: T. DOGGETT	STATE OF ALASKA DEPARTMENT OF TRANSPORTATION & PUBLIC FACILITIES SOUTHEAST REGION
STATE OF ALASKA 49th TIMOTHY H. DOGGETT CE-9027 REGISTERED PROFESSIONAL ENGINEER 12/24/15	**CLARK BAY FERRY TERMINAL IMPROVEMENTS**
CHECKED BY: STAFF	**INTERMEDIATE RAMP**
DRAWN BY: STAFF	
PATH: Q:\POW\67449\PLANSET\REVISED DWGS\INTERMEDIATE RAMP\INTERMEDIATE RAMP _R1.DWG	
TAB: 4 Friday, January 23, 2015 6:51:01 PM	DOGGETT, TIMOTHY H (DOT)

REVISIONS NO.	DATE	DESCRIPTION	PROJECT DESIGNATION	YEAR	SHEET NO.	TOTAL SHEETS
1	1/21/15	HYD CYL DIM CHECK	67449/0924019	2014	~~4~~ 61	~~4~~ 61

67449 / 504(8) 130' Steel Transfer Bridge

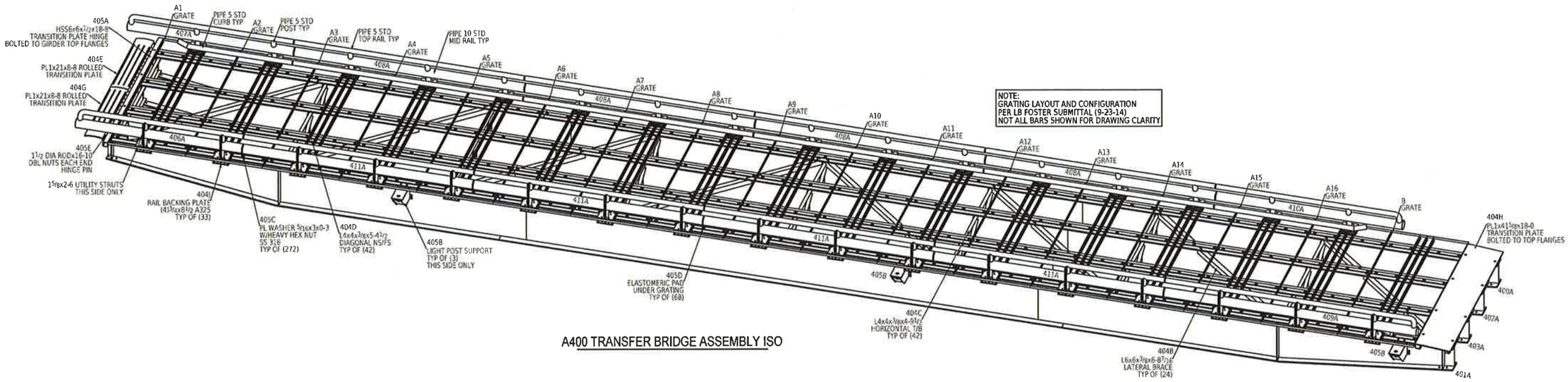

A400 TRANSFER BRIDGE ASSEMBLY ISO

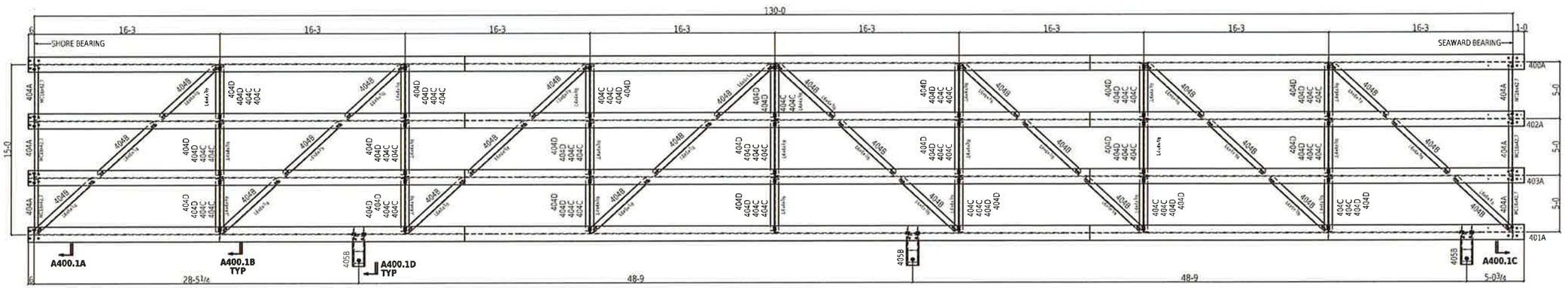

A400A TRANSFER BRIDGE FRAMING PLAN
REF: 16 OF 57

Record Drawings have been reviewed by the Project Engineer, and represent to the best of my knowledge, the project as constructed.
PE _____ Date 12/10/15

SOUTHCOAST REGION CONSTRUCTION
FEB 03 2015

FOR FABRICATION
Dave Hankins 1-22-15

State of Alaska
Dept. of Transportation and Public Facilities
Marine Facilities Engineering

CONTRACTOR SUBMITTAL REVIEW

Checking is only for conformance with the design concepts of the Project and compliance with the information given in the Contract Documents. The Contractor is responsible for dimensions to be confirmed and correlated at the job site for information that pertains solely to the fabrication process or to techniques of construction for coordination of the work of all trades.

ACCEPTED ✓
ACCEPTED AS NOTED _____
RETURNED FOR CORRECTION _____
02/09/2015 Tim Doggett
Date Design Engineer

Jan 21 2015 11:09:33 AM SHEET SIZE: 24X36 JOB NO. ####

TOLERANCES:
(UNLESS OTHERWISE SPECIFIED)
3 PLACE DECIMALS +/- .01
2 PLACE DECIMALS +/- .03
FRACTIONS +/- 1/16
ANGLES +/- 2 DEGREES
MACHINE FINISHES 125 √U.N.

REV	DESCRIPTION	BY	CHK	DATE
0	FOR FABRICATION	RRP	KB	Jan 12 2015
A	FOR APPROVAL	RRP	KB	Oct 28 2014

NOTES:
1. ERECT ALL MEMBER WITH THE MARKED END IN THE SAME RELATIVE POSITION AS SHOWN ON THE ERECTION DRAWING.
2. B.O.S.=BOTTOM OF STEEL. ELEVATIONS REFERENCED (xxx-x x/x) ARE TOP OF STEEL.
3. PLEASE PROVIDE INFORMATION AND VERIFICATIONS INDICATED IN CLOUDED AREAS. CLOUDED NOTES WITH NO REMARKS FROM THE APPROVAL AUTHORITY WILL BE CONSIDERED AS AN AFFIRMATION.

DETAILING: FABRICATION TECHNICAL SERVICES, INC.
www.FTSsteeldetailing.com
CONTACT: Kevin@FTSsteeldetailing.com
ph: (208) 457-8282

JESSE ENGINEERING CO.
1840 Marine View Drive, Tacoma, Washington 98422 Ph. 253-922-7433

REF: SHEETS 16 THRU 19 OF 57

PROJECT: IFA HOLLIS/CLARK BAY FERRY TERMINAL IMPROVEMENTS
CONTRACTOR: WESTERN MARINE CONSTRUCTION
DESCRIPTION: TRANSFER BRIDGE ASSEMBLY
DATE: 10-23-14
FABRICATOR JOB NO: 203940
DRG NO: A400

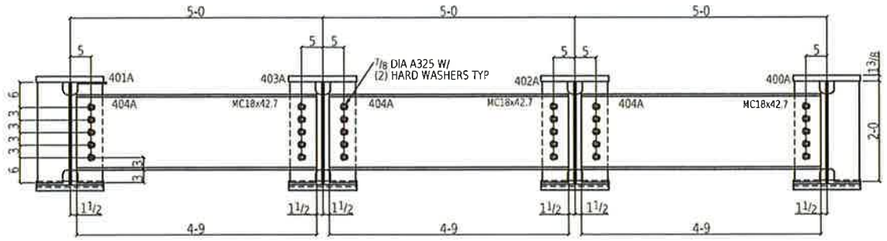

A400.1A SHOREWARD BEARING DIAPHRAGM
VIEW FROM INTERIOR

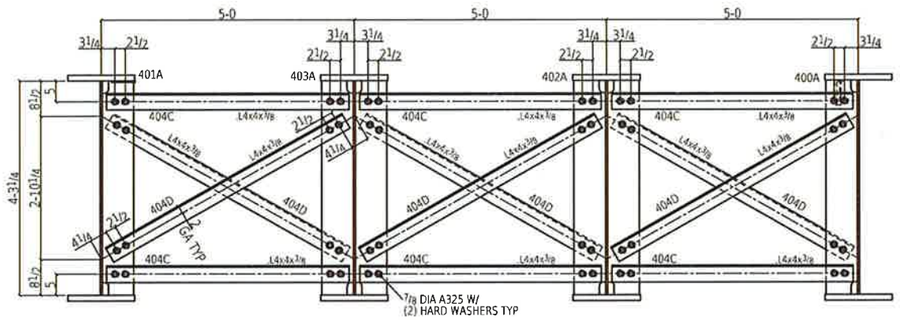

A400.1B TYPICAL CROSS FRAME
VIEWPOINT: FACING SHOREWARD
TYPICAL OF (7) LOCATIONS @ 16-3 O.C.

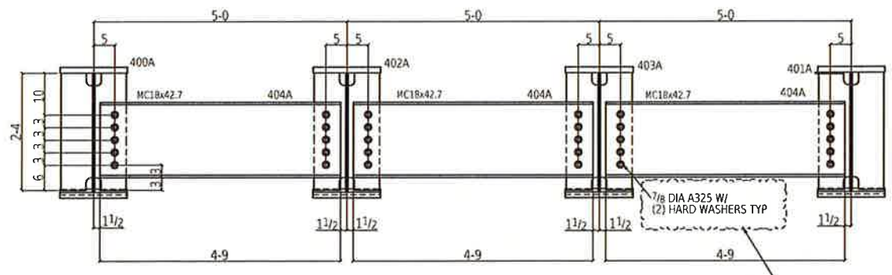

A400.1C SEAWARD BEARING DIAPHRAGM
VIEW FROM INTERIOR

VERIFY OK
THIS CONNECTION ONLY

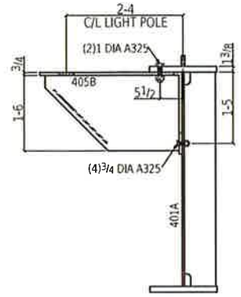

A400.1D LIGHT SUPPORT BRACKET
TYPICAL (3) LOCATIONS WEST SIDE ONLY

Record Drawings have been reviewed by the Project Engineer, and represent to the best of my knowledge, the project as constructed.

PE [signature] Date 12/10/15

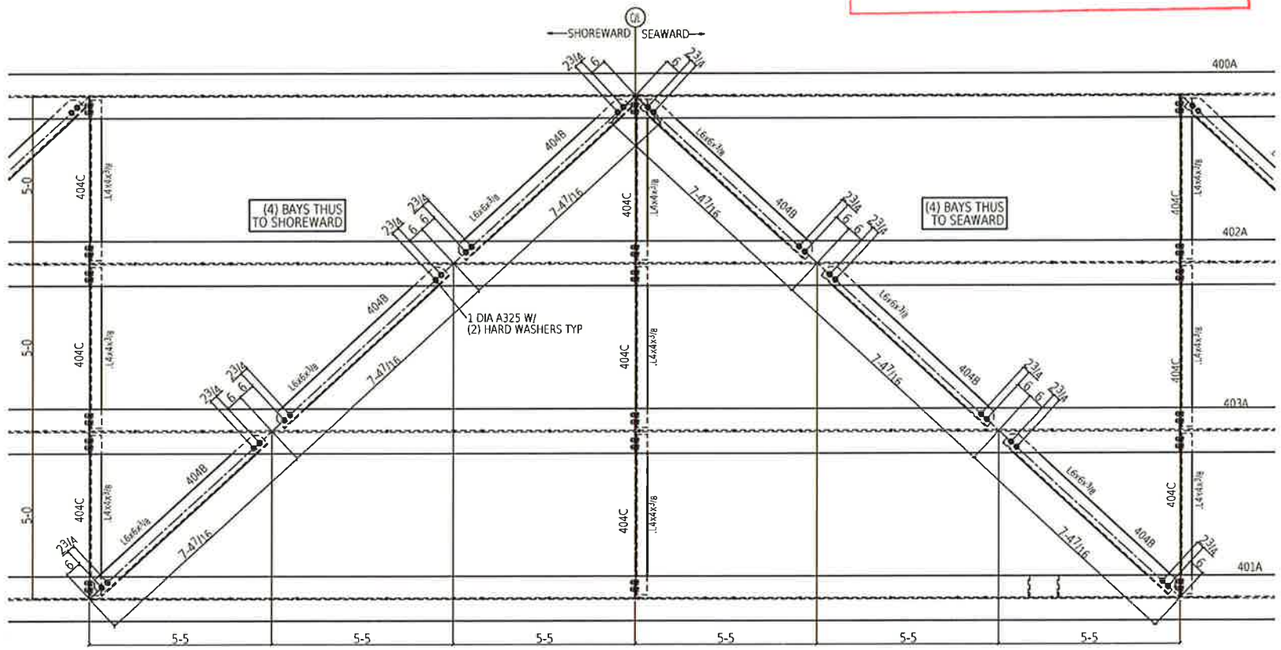

A400.1E ENLARGED LATERAL BRACING PLAN

FABRICATOR NOTE:
CLEARANCE TO UNDERSIDE OF DECK GRATING IS 7/8 INCHES.
COMBINED HEIGHT OF BOLT HEAD AND FLAT WASHER
MUST NOT EXCEED THIS CLEARANCE.

FOR FABRICATION
Dave Hankins 1-22-15

State of Alaska
Dept. of Transportation and Public Facilities
Marine Facilities Engineering

CONTRACTOR SUBMITTAL REVIEW

Checking is only for conformance with the design concepts of the Project and compliance with the information given in the Contract Documents. The Contractor is responsible for dimensions to be confirmed and correlated at the job site for information that pertains solely to the fabrication process or to techniques of construction for coordination of the work of all trades.

ACCEPTED ✔
ACCEPTED AS NOTED
RETURNED FOR CORRECTION

02/09/2015 Tim Doggett
Date Design Engineer

TOLERANCES:

(UNLESS OTHERWISE SPECIFIED)
3 PLACE DECIMALS +/- .01
2 PLACE DECIMALS +/- .03
FRACTIONS +/- 1/16
ANGLES +/- 2 DEGREES
MACHINE FINISHES 125 √U.N.

REV	DESCRIPTION	BY	CHK	DATE
B	FOR REAPPROVAL	RRP	KB	Jan 21 2015
A	FOR APPROVAL	RRP	KB	Oct 28 2014

NOTES:
1. ERECT ALL MEMBER WITH THE MARKED END IN THE SAME RELATIVE POSITION AS SHOWN ON THE ERECTION DRAWING.
2. B.O.S.=BOTTOM OF STEEL. ELEVATIONS REFERENCED (xxx-x x/x) ARE TOP OF STEEL.
3. PLEASE PROVIDE INFORMATION AND VERIFICATIONS INDICATED IN CLOUDED AREAS. CLOUDED NOTES WITH NO REMARKS FROM THE APPROVAL AUTHORITY WILL BE CONSIDERED AS AN AFFIRMATION.

DETAILING: FABRICATION TECHNICAL SERVICES, INC.
www.FTSsteeldetailing.com
CONTACT: Kevin@FTSsteeldetailing.com
ph: (208) 457-8282

JESSE ENGINEERING CO.
1840 Marine View Drive, Tacoma, Washington 98422 Ph. 253-922-7433

REF: A1000

PROJECT: IFA HOLLIS/CLARK BAY FERRY TERMINAL IMPROVEMENTS
CONTRACTOR: WESTERN MARINE CONSTRUCTION
DESCRIPTION: TRANSFER BRIDGE ASSEMBLY
DATE: 10-23-14
FABRICATOR JOB NO: 203940
DWG NO: A400.1

JOB NO. ### SHEET SIZE: 24X36 11:09:34 AM Jan 21 2015

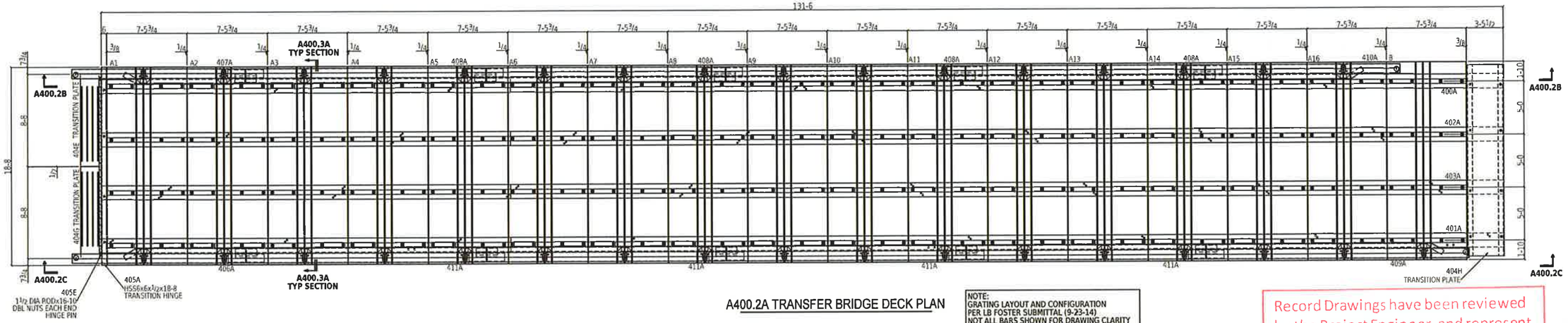

A400.2A TRANSFER BRIDGE DECK PLAN

NOTE:
GRATING LAYOUT AND CONFIGURATION PER LB FOSTER SUBMITTAL (9-23-14)
NOT ALL BARS SHOWN FOR DRAWING CLARITY
SEE A400.3B FOR TYPICAL CONNECTION DETAILS

Record Drawings have been reviewed by the Project Engineer, and represent to the best of my knowledge, the project as constructed.
PE KLudd Date 12/10/15

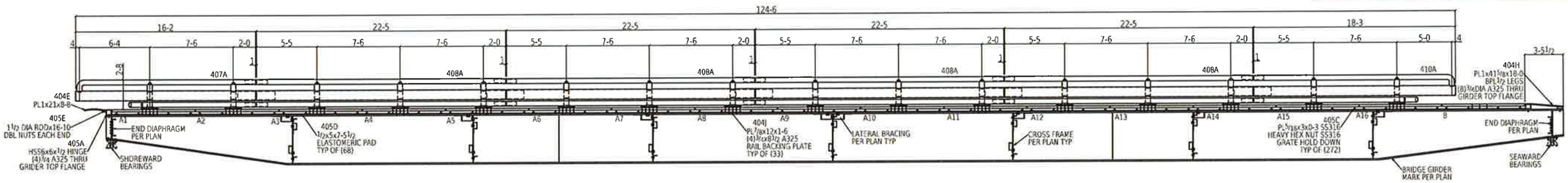

A400.2B EAST BRIDGE ELEVATION
VIEWPOINT FROM INTERIOR

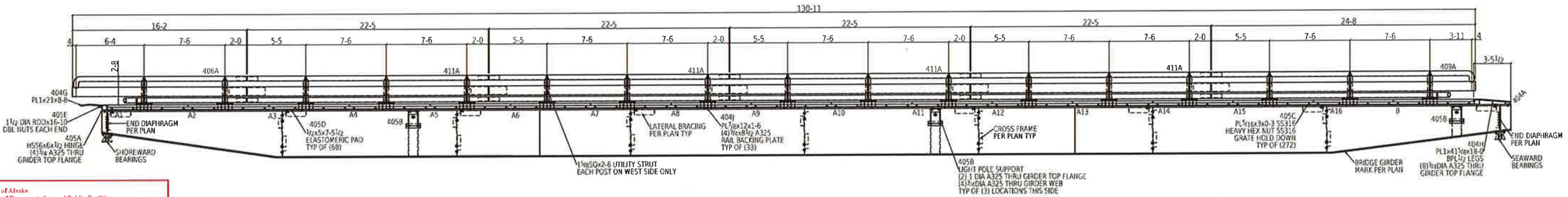

A400.2C WEST BRIDGE ELEVATION
VIEWPOINT FROM EXTERIOR

FOR FABRICATION
Dave Hankins 1-22-15

State of Alaska
Dept. of Transportation and Public Facilities
Marine Facilities Engineering

CONTRACTOR SUBMITTAL REVIEW

Checking is only for conformance with the design concepts of the Project and compliance with the information given in the Contract Documents. The Contractor is responsible for dimensions to be confirmed and correlated at the job site for information that pertains solely to the fabrication process or to techniques of construction for coordination of the work of all trades

ACCEPTED ✔
ACCEPTED AS NOTED
RETURNED FOR CORRECTION
02/09/2015 Tim Doggett
Date Design Engineer

TOLERANCES:
(UNLESS OTHERWISE SPECIFIED)
3 PLACE DECIMALS +/- .01
2 PLACE DECIMALS +/- .03
FRACTIONS +/- 1/16
ANGLES +/- 2 DEGREES
MACHINE FINISHES 125 U.N.

REV	DESCRIPTION	BY	CHK	DATE
0	FOR FABRICATION	RRP	KB	Jan 12 2015
A	FOR APPROVAL	RRP	KB	Oct 28 2014

NOTES:
1. ERECT ALL MEMBER WITH THE MARKED END IN THE SAME RELATIVE POSITION AS SHOWN ON THE ERECTION DRAWING.
2. B.O.S.=BOTTOM OF STEEL. ELEVATIONS REFERENCED (xxx-x x/x) ARE TOP OF STEEL.
3. PLEASE PROVIDE INFORMATION AND VERIFICATIONS INDICATED IN CLOUDED AREAS. CLOUDED NOTES WITH NO REMARKS FROM THE APPROVAL AUTHORITY WILL BE CONSIDERED AS AN AFFIRMATION.

DETAILING: FABRICATION TECHNICAL SERVICES, INC.
www.FTSsteeldetailing.com
CONTACT: Kevin@FTSsteeldetailing.com
ph: (208) 457-8282

JESSE ENGINEERING CO.
1840 Marine View Drive, Tacoma, Washington 98422 Ph. 253-922-7433

REF: A1000

PROJECT: IFA HOLLIS/CLARK BAY FERRY TERMINAL IMPROVEMENTS
CONTRACTOR: WESTERN MARINE CONSTRUCTION
DESCRIPTION: TRANSFER BRIDGE ASSEMBLY
DATE: 10-23-14
FABRICATION JOB NO: 203940
DRG NO: A400.2

JOB NO. ###
SHEET SIZE: 24X36
09:08:00 AM
Jan 12 2015

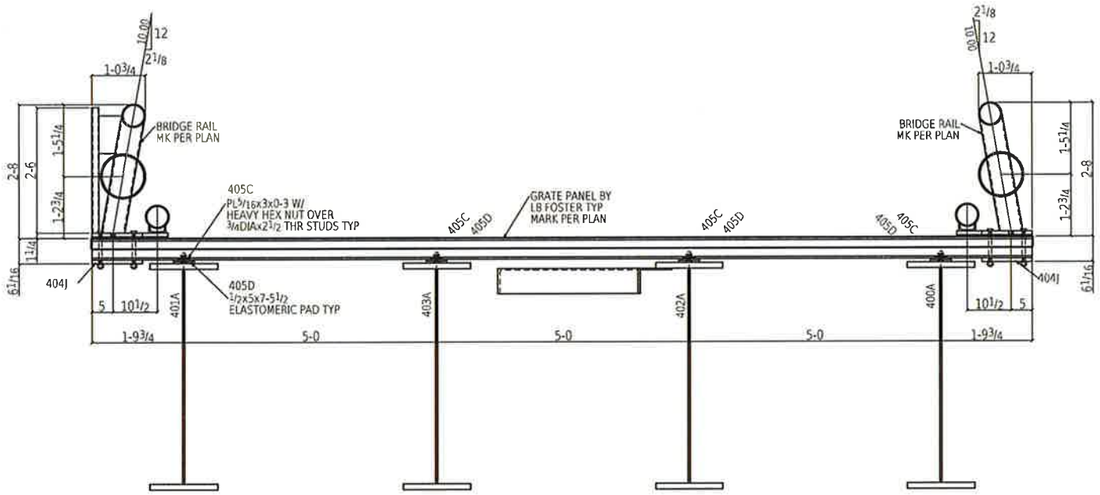

A400.3A TYP BRIDGE DECK SECTION
VIEWPOINT: FACING SHOREWARD

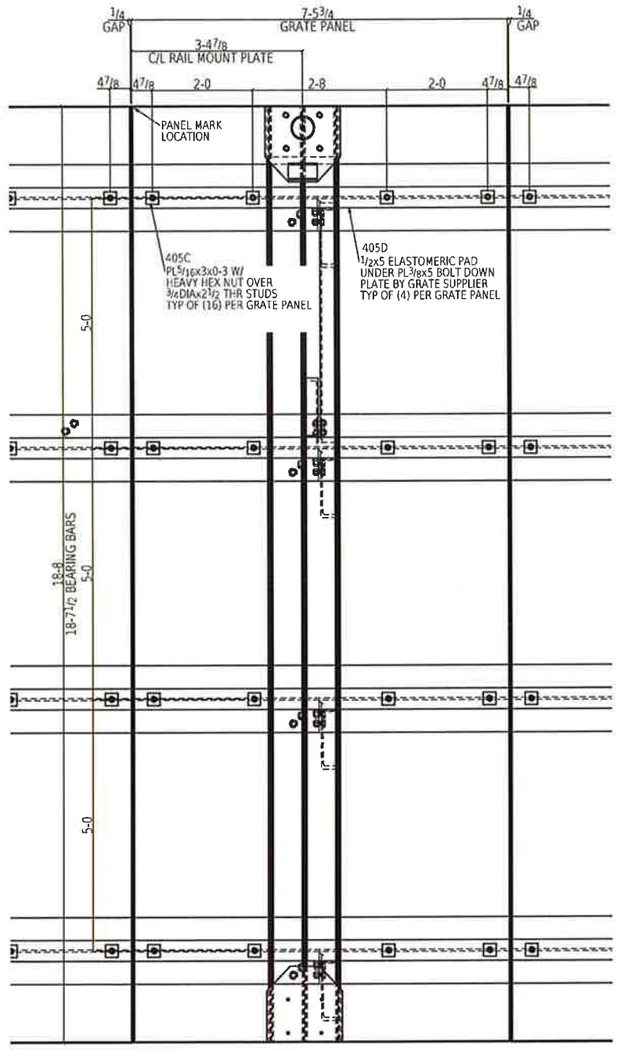

A400.3B ENLARGED TYPICAL GRATE PANEL ATTACHMENT

Record Drawings have been reviewed by the Project Engineer, and represent to the best of my knowledge, the project as constructed.

PE _____ Date 12/16/15

FOR FABRICATION
Dave Hankins 1-22-15

State of Alaska
Dept. of Transportation and Public Facilities
Marine Facilities Engineering

CONTRACTOR SUBMITTAL REVIEW

Checking is only for conformance with the design concepts of the Project and compliance with the information given in the Contract Documents. The Contractor is responsible for dimensions to be confirmed and correlated at the job site for information that pertains solely to the fabrication process or to techniques of construction for coordination of the work of all trades.

ACCEPTED ✓
ACCEPTED AS NOTED
RETURNED FOR CORRECTION

02/09/2015 Tim Doggett
Date Design Engineer

TOLERANCES:
(UNLESS OTHERWISE SPECIFIED)
3 PLACE DECIMALS +/- .01
2 PLACE DECIMALS +/- .03
FRACTIONS +/- 1/16
ANGLES +/- 2 DEGREES
MACHINE FINISHES 125 ✓U.N.

REV	DESCRIPTION	BY	CHK	DATE
0	FOR FABRICATION	BRP	KR	Jan 12 2015
A	FOR APPROVAL	BRP	KR	Oct 28 2014

NOTES:
1. ERECT ALL MEMBER WITH THE MARKED END IN THE SAME RELATIVE POSITION AS SHOWN ON THE ERECTION DRAWING.
2. B.O.S.=BOTTOM OF STEEL. ELEVATIONS REFERENCED (xxx-x x/x) ARE TOP OF STEEL.
3. PLEASE PROVIDE INFORMATION AND VERIFICATIONS INDICATED IN CLOUDED AREAS. CLOUDED NOTES WITH NO REMARKS FROM THE APPROVAL AUTHORITY WILL BE CONSIDERED AS AN AFFIRMATION.

DETAILING: FABRICATION TECHNICAL SERVICES, INC.
www.FTSsteeldetailing.com
CONTACT: Kevin@FTSsteeldetailing.com
ph: (208) 457-8282

JESSE ENGINEERING CO.
1840 Marine View Drive, Tacoma, Washington 98422 Ph. 253-922-7433

REF: A1000

PROJECT
IFA HOLLIS/CLARK BAY
FERRY TERMINAL IMPROVEMENTS
CONTRACTOR
WESTERN MARINE CONSTRUCTION
DESCRIPTION
TRANSFER BRIDGE ASSEMBLY
DATE 10-23-14
FABRICATION JOB NO 203940
DRG NO A400.3

SHEET SIZE: 24X36 JOB NO. #### 09:08:01 AM Jan 12 2015

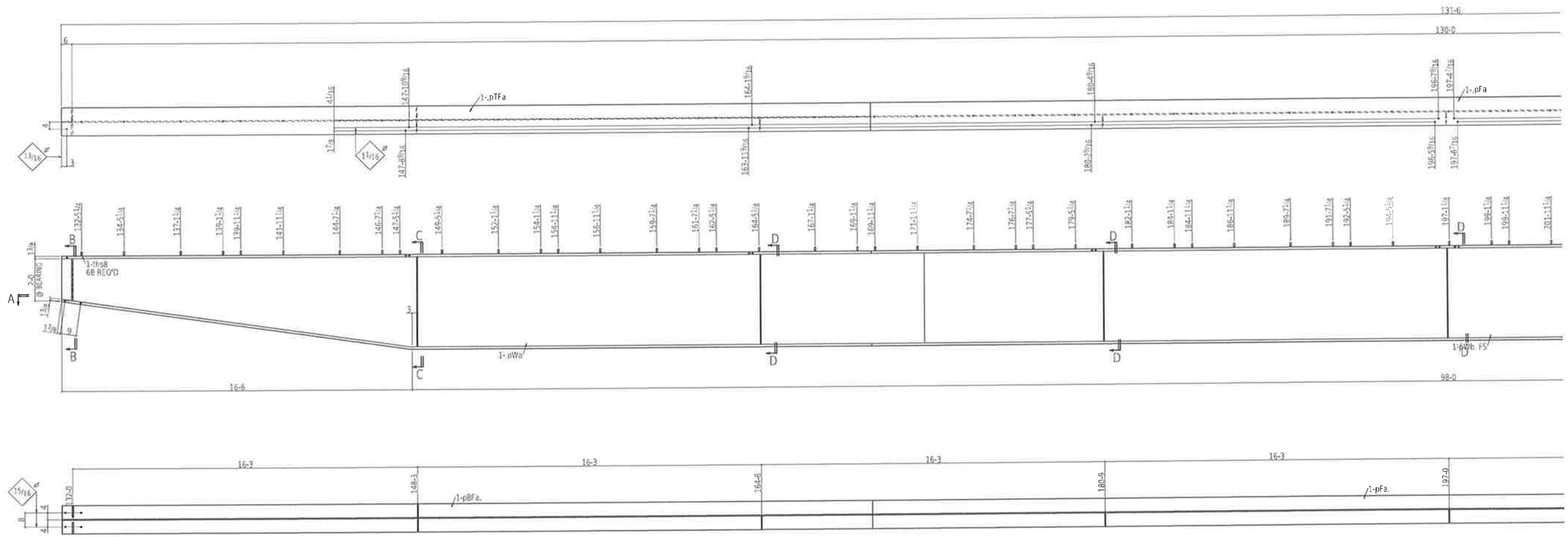

Section A-A
400A

ONE TRANSFER GIRDER 400A

Record Drawings have been reviewed by the Project Engineer, and represent to the best of my knowledge, the project as constructed.

PE [signature] Date 12/10/15

FOR FABRICATION

Dave Hankins 1-22-15

State of Alaska
Dept. of Transportation and Public Facilities
Marine Facilities Engineering

CONTRACTOR SUBMITTAL REVIEW

Checking is only for conformance with the design concepts of the Project and compliance with the information given in the Contract Documents. The Contractor is responsible for dimensions to be confirmed and correlated at the job site for information that pertains solely to the fabrication process or to techniques of construction for coordination of the work of all trades.

ACCEPTED ✓
ACCEPTED AS NOTED
RETURNED FOR CORRECTION

02/09/2015 Tim Doggett
Date Design Engineer

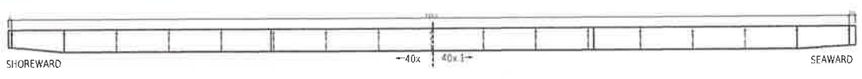

NOTES:
1. SEAL ALL WELDS.
2. SEE SHEET A400 FOR FULL ASSEMBLY.
3. SEE SHEET 400.1 FOR BALANCE OF SPAN.
4. SEE SHEET 400.2 FOR SECTIONS INDICATED.
5. SEE SHEET 400.11 FOR GIRDER CAMBERS AND WELD DETAILS.

TOLERANCES:
(UNLESS OTHERWISE SPECIFIED)
3 PLACE DECIMALS +/- .01
2 PLACE DECIMALS +/- .03
FRACTIONS +/- 1/16
ANGLES +/- 2 DEGREES
MACHINE FINISHES 125 √U.N.

REV	DESCRIPTION	BY	CHK	DATE
0	FOR FABRICATION	RRP	KB	Jan 12 2015
A	FOR APPROVAL	RRP	KB	Oct 28 2014

BILL OF MATERIAL

QTY total	Piece Mark	QTY unit	Description	Length		Remarks	Weight Unit
ONE	400A		TRANSFER GIRDER			SPRAY METALIZED	31855
1	pBFa	1	PL1 3/8x461 1/16	1	4	BENT A709-50	2876
1	pBFb	1	PL1 3/8x460 9/16	1	4	BENT A709-50	2873
1	pFa	1	PL1 3/8x16	55	0	A709-50	4117
1	pFa	1	PL1 3/8x16	55	0	A709-50	4117
1	pTFa	1	PL1 3/8x16	38	3	A709-50	2863
1	pTFa	1	PL1 3/8x16	38	3	A709-50	2863
1	p227	1	PL3/4x7 1/2	2	4	A36	45
1	p233	1	PL3/4x7 1/2	2	4	A36	45
1	p211	1	PL3/4x7 1/2	2	0	A36	38
1	p225	1	PL3/4x7 1/2	2	0	A36	38
1	pWa	1	PL1/2x51 1/4	50	0	A709-50	4360
1	pWa	1	PL1/2x51 1/4	40	9	A709-50	3553
1	pWc	1	PL1/2x51 1/4	40	9	A709-50	3553
7	p16	7	PL1/2x7 1/2	4	3 1/4	A36	54
7	p251	7	PL1/2x7 1/2	4	3 1/4	A36	54
68	ths8	68	TRD3/4	0	2 1/2	SS316	0

BILL OF MATERIAL

QTY total	Piece Mark	QTY unit	Description	Length		Remarks	Weight Unit
			FIELD BOLTS				
8			7/8 Dia A325 DTI	0	3 3/4	+1DTI WASH	

Total weight: 31855

DETAILING
JOB 2265
REF A400

FABRICATION TECHNICAL SERVICES, INC.
307 N. LINCOLN STE. B, POST FALLS, ID 83854
(208) 457-8282 fax (208) 457-8208
EMAIL kevin@FTSsteeldetailing.com

HOLES DIA UNO 13/16
SURF PREP SEE B.O.M.
FINISH SEE B.O.M.

WELD 3/16 FILLET U.N.O. (E70XX)
W.P. (TAILS)
COL BASE PLATES ARE ALWAYS SECTION CUTS LOOKING DOWN

JESSE ENGINEERING CO.
1840 Marine View Drive, Tacoma, Washington 98422 Ph. 253-922-7433

PROJECT
IFA HOLLIS/CLARK BAY
FERRY TERMINAL IMPROVEMENTS

CONTRACTOR
WESTERN MARINE CONSTRUCTION

DESCRIPTION
130' TRANSFER BRIDGE

DATE 10-27-14
JOB NO. 203940
DWG NO. 400

SHEET SIZE: 24X36
09:08:01 AM
Jan 12 2015



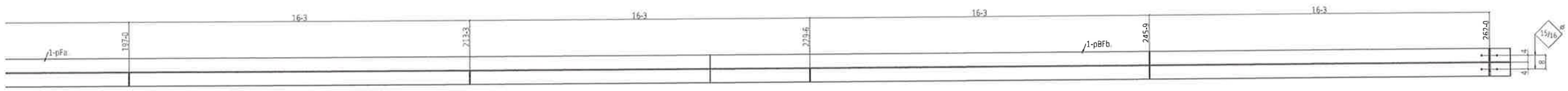

Section A-A
400A

ONE TRANSFER GIRDER 400A

Record Drawings have been reviewed by the Project Engineer, and represent to the best of my knowledge, the project as constructed.

PE _____ Date 12/10/15

FOR FABRICATION
Dave Hankins 1-22-15

State of Alaska
Dept. of Transportation and Public Facilities
Marine Facilities Engineering

CONTRACTOR SUBMITTAL REVIEW

Checking is only for conformance with the design concepts of the Project and compliance with the information given in the Contract Documents. The Contractor is responsible for dimensions to be confirmed and correlated at the job site for information that pertains solely to the fabrication process or to techniques of construction for coordination of the work of all trades.

ACCEPTED ✔
ACCEPTED AS NOTED _____
RETURNED FOR CORRECTION _____
02/09/2015 Tim Doggett
Date Design Engineer

NOTES:
1. SEAL ALL WELDS.
2. SEE SHEET A400 FOR FULL ASSEMBLY.
3. SEE SHEET 400 FOR BALANCE OF SPAN.
4. SEE SHEET 400.2 FOR SECTIONS INDICATED.
5. SEE SHEET 400.11 FOR GIRDER CAMBERS AND WELD DETAILS.

TOLERANCES:
(UNLESS OTHERWISE SPECIFIED)
3 PLACE DECIMALS +/- .01
2 PLACE DECIMALS +/- .03
FRACTIONS +/- 1/16
ANGLES +/- 2 DEGREES
MACHINE FINISHES 125 √U.N.

REV	DESCRIPTION	BY	CHK	DATE
B	FOR FABRICATION	RPP	KB	Jan 12 2015
A	FOR APPROVAL	RPP	KB	Oct 28 2014

BILL OF MATERIAL

QTY total	Piece Mark	QTY unit	Description	Length	Remarks	Weight Unit

BILL OF MATERIAL

QTY total	Piece Mark	QTY unit	Description	Length	Remarks	Weight Unit

Total weight: 0

DETAILING:
JOB: 2265
REF: A400

FABRICATION TECHNICAL SERVICES, INC.
307 N. LINCOLN STE. B, POST FALLS, ID 83854
(208) 457-8282 fax (208) 457-8208
EMAIL kevin@FTSsteeldetailing.com

HOLES DIA UNO 13/16
SURF PREP: SEE B.O.M.
FINISH: SEE B.O.M.

WELD 5/16 FILLET U.N.O. (E70XX)
W.P. (TAILS)
COL BASE PLATES ARE ALWAYS SECTION CUTS LOOKING DOWN

JESSE ENGINEERING CO.
1840 Marine View Drive, Tacoma, Washington 98422 Ph: 253-922-7433

PROJECT
IFA HOLLIS/CLARK BAY
FERRY TERMINAL IMPROVEMENTS

CONTRACTOR
WESTERN MARINE CONSTRUCTION

DATE 10-27-14
JOB NO 203940

DRAWING
130' TRANSFER BRIDGE

SHEET NO 400.1

SHEET SIZE 24X36
09:08:02 AM
Jan 12 2015

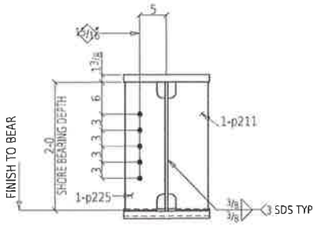

Section B-B
400A

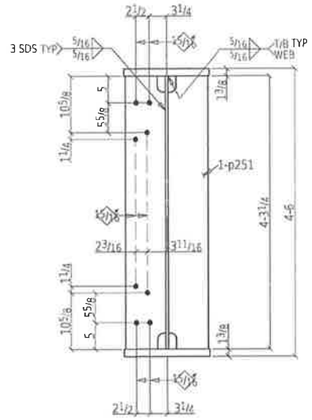

Section C-C
400A

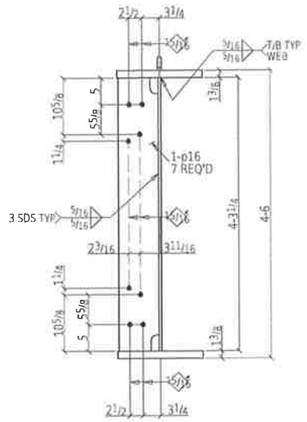

Section D-D
400A

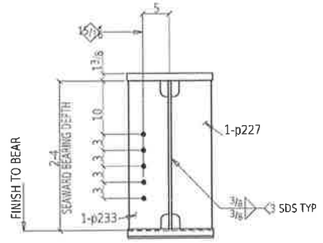

Section E-E
400A

Record Drawings have been reviewed by the Project Engineer, and represent to the best of my knowledge, the project as constructed.

PE Date 12/10/15

FOR FABRICATION
Dave Hankins 1-22-15

State of Alaska
Dept. of Transportation and Public Facilities
Marine Facilities Engineering

CONTRACTOR SUBMITTAL REVIEW

Checking is only for conformance with the design concepts of the Project and compliance with the information given in the Contract Documents. The Contractor is responsible for dimensions to be confirmed and correlated at the job site for information that pertains solely to the fabrication process or to techniques of construction for coordination of the work of all trades.

ACCEPTED ✔
ACCEPTED AS NOTED
RETURNED FOR CORRECTION
02/09/2015 Tim Doggett
Date Design Engineer

SHEET SIZE: 24X36
09:58:02 AM
Jan 12 2015

NOTES:
1. SEAL ALL WELDS.
2. SEE SHEET A400 FOR FULL ASSEMBLY.
3. SEE SHEETS 400 AND 400.1 FOR SECTION CUTS.

TOLERANCES:

(UNLESS OTHERWISE SPECIFIED)
3 PLACE DECIMALS +/- .01
2 PLACE DECIMALS +/- .03
FRACTIONS +/- 1/16
ANGLES +/- 2 DEGREES
MACHINE FINISHES 125 √U.N.

REV	DESCRIPTION	BY	CHK	DATE
0	FOR FABRICATION	RRP	KB	Jan 12 2015
A	FOR APPROVAL	RRP	KB	Oct 28 2014

BILL OF MATERIAL

QTY total	Piece Mark	QTY unit	Description	Length		Remarks	Weight Unit
ONE	400a		TRANSFER GIRDER			SPRAY METALIZED	31855
1	pBFa	1	PL 1 3/8 x 46 1 1/16	1	4	BENT A709-50	2876
1	pBFb	1	PL 1 3/8 x 46 0 9/16	1	4	BENT A709-50	2873
1	pFa	1	PL 1 3/8 x 16	55	6	A709-50	4117
1	pFa	1	PL 1 3/8 x 16	55	0	A709-50	4117
1	pTFa	1	PL 1 3/8 x 16	36	3	A709-50	2863
1	pTFa	1	PL 1 3/8 x 16	36	3	A709-50	2863
1	p227	1	PL 3/8 x 7 1/2	2	4	A36	45
1	p233	1	PL 3/8 x 7 1/2	2	4	A36	45
1	p211	1	PL 3/8 x 7 1/2	2	0	A36	38
1	p225	1	PL 3/8 x 7 1/2	2	0	A36	38
1	pWb	1	PL 1 1/2 x 5 1 1/16	50	0	A709-50	4360
1	pWa	1	PL 1 1/2 x 5 1 1/16	40	9	A709-50	3553
1	pWc	1	PL 1 1/2 x 5 1 1/16	40	9	A709-50	3553
7	p16	7	PL 1/2 x 7 1/2	4	3 1/4	A36	54
2	p751	2	PL 1/2 x 7 1/2	4	3 1/4	A36	54
64	ths8	64	TRD 3/4	0	2 1/2	SS316	0

BILL OF MATERIAL

QTY total	Piece Mark	QTY unit	Description	Length		Remarks	Weight Unit
			FIELD BOLTS				
#			7/8 Dia A325 DTH	0	3 3/4	+1DTI WASH	

Total weight: 31855

DETAILING:
JOB: 2265
REF: A400

FABRICATION TECHNICAL SERVICES, INC.
307 N. LINCOLN STE. B POST FALLS, ID 83854
(208) 457-8282 fax (208) 457-8208
EMAIL: steve@FTSsteeldetailing.com

HOLES DIA UNO: 13/16
SURF PREP: SEE B.O.M.
FINISH: SEE B.O.M.

WELD 3/16 FILLET U.N.O. (E70XX)
W.P. (TAILS)
COL BASE PLATES ARE ALWAYS SECTION CUTS LOOKING DOWN

JESSE ENGINEERING CO.
1840 Marine View Drive, Tacoma, Washington 98422 Ph. 253-922-7433

PROJECT: IFA HOLLIS/CLARK BAY FERRY TERMINAL IMPROVEMENTS
CONTRACTOR: WESTERN MARINE CONSTRUCTION
DATE: 10-27-14
JOB NO: 203940
DESCRIPTION: 130' TRANSFER BRIDGE
DRAWING: 400.2

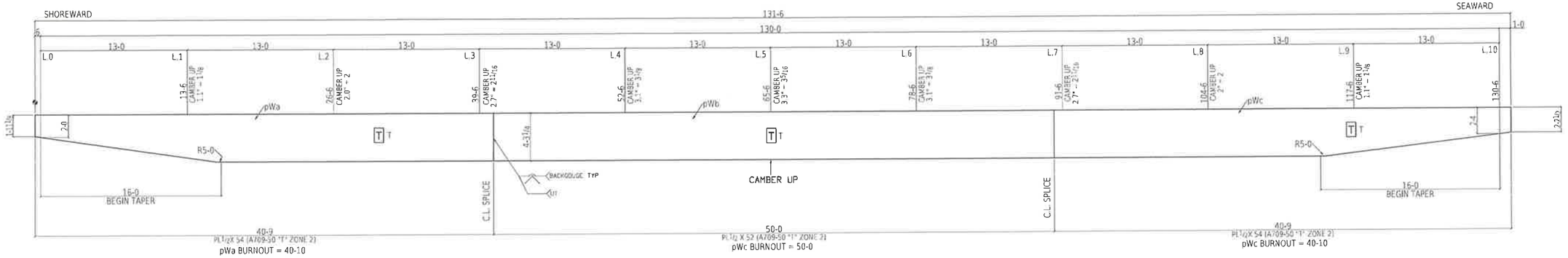

WEB DIAGRAM

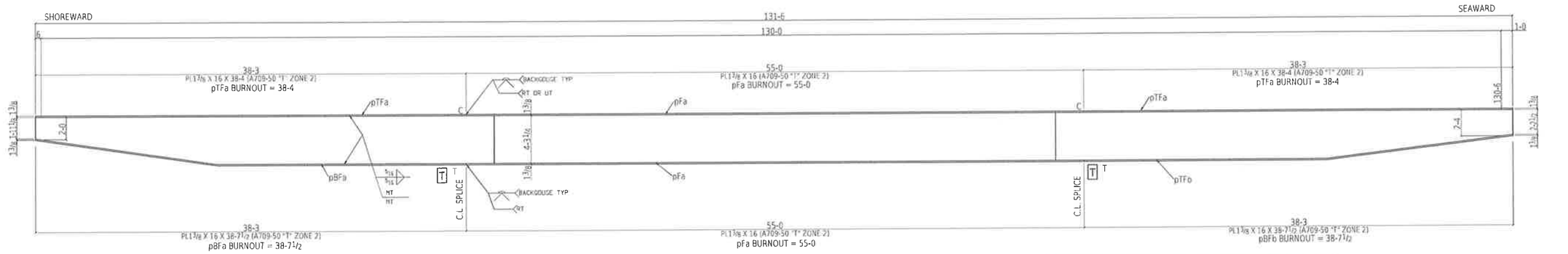

FLANGE DIAGRAM

State of Alaska
Dept. of Transportation and Public Facilities
Marine Facilities Engineering

CONTRACTOR SUBMITTAL REVIEW

Checking is only for conformance with the design concepts of the Project and compliance with the information given in the Contract Documents. The Contractor is responsible for dimensions to be confirmed and correlated at the job site for information that pertains solely to the fabrication process or to techniques of construction for coordination of the work of all trades.

ACCEPTED ✔
ACCEPTED AS NOTED
RETURNED FOR CORRECTION

02/09/2015 Tim Doggett
Date Design Engineer

Record Drawings have been reviewed by the Project Engineer, and represent to the best of my knowledge, the project as constructed.

PE KLall Date 12/10/15

FOR FABRICATION
Dave Hankins 1-22-15

NOTES
ALL MATERIAL = A709-50 UNO
T AND C INDICATE TENSION AND COMPRESSION RESPECTIVELY AND SHOULD BE TESTED PER D1.5

T TENSION COMPONENTS OF REDUNDANT MEMBERS SHALL BE TESTED INACCORDANCE TO TABLE 8 OF ASTM-A-709, ZONE 2.

SEE NOTES AND WELD CONFIGURATIONS ON SHEET 400.12

TOLERANCES:

(UNLESS OTHERWISE SPECIFIED)
3 PLACE DECIMALS +/- .01
2 PLACE DECIMALS +/- .03
FRACTIONS +/- 1/16
ANGLES +/- 2 DEGREES
MACHINE FINISHES 125 U.N.

REV	DESCRIPTION	BY	CHK	DATE
B	FOR FABRICATION	RAP	KB	Jan 12 2015
A	FOR APPROVAL	RAP	KB	Oct 28 2014

BILL OF MATERIAL

QTY total	Piece Mark	QTY unit	Description	Length	Remarks	Weight Unit

BILL OF MATERIAL

QTY total	Piece Mark	QTY unit	Description	Length	Remarks	Weight Unit

Total weight: 0

DETAILING
JOB 2265
REF A400

FABRICATION TECHNICAL SERVICES, INC.
307 N. LINCOLN STE. B, POST FALLS, ID 83854
(208) 457-8282 fax (208) 457-8208
EMAIL kevin@FTSsteeldetailing.com

HOLES DIA UNO 13/16
SURF PREP SEE B.O.M.
FINISH: SEE B.O.M.

WELD 3/16 FILLET U.N.O. (E70XX)
W.P. (TAILS)
COL BASE PLATES ARE ALWAYS SECTION CUTS LOOKING DOWN

JESSE ENGINEERING CO.
1840 Marine View Drive, Tacoma, Washington 98422 Ph. 253-922-7433

PROJECT
IFA HOLLIS/CLARK BAY FERRY TERMINAL IMPROVEMENTS

CONTRACTOR
WESTERN MARINE CONSTRUCTION

DATE 10-10-14

JOB NO 203940

DESCRIPTION
TRANSFER SPAN GIRDER

DRAWING 400.11

SHEET SIZE 24X36
01:51:16 PM
Jan 21 2015

TRANSFER BRIDGE SHOP NOTES

SPECIFICATIONS:

1. CONSTRUCTION OF THIS STRUCTURE SHALL CONFORM TO "AASHTO LRFD BRIDGE DESIGN SPECIFICATIONS", THE STATE DOT SPECIFICATIONS AND THE SPECIAL PROVISIONS.
2. AASHTO LRFD AND AWS D1.5, 2008, "BRIDGE WELDING CODE", AND AS 4, 2007 "STANDARD SYMBOLS FOR WELDING, BRAZING, AND NON-DESTRUCTIVE EXAMINATION," AISC LRFD 14TH ED.
3. MATERIAL, WORKMANSHIP, AND FABRICATION SHALL BE PERFORMED IN ACCORDANCE WITH THE STATE DOT SPECIFICATION, SUPPLEMENTAL AND SPECIAL PROVISIONS SEC 504.

MATERIAL:

1. ALL FLANGES, WEBS AND SPLICE PLATES SHALL BE ASTM A709 GRADE 50, OTHER MATERIAL SHALL BE ASTM A709 GRADE 36.
2. ALL MATERIAL NOTED ON THE DETAILS AS "CVN" OR [T] SHALL REQUIRE CHARPY V-NOTCH IMPACT TESTED AS CATEGORY 2 AND ASTM-A709 TABLE 8.
3. ALL H.S. BOLTS SHALL MEET THE REQUIREMENTS OF ASTM A325 TYPE 1. ALL NUTS SHALL MEET THE REQUIREMENTS OF ASTM A 563. ALL WASHERS SHALL MEET THE REQUIREMENTS OF ASTM F436. DIRECT TENSION INDICATING WASHERS MEET ASTM F959. (2) NOT MIX NUTS AND BOLTS FROM DIFFERENT LOTS. RC TESTING IS REQUIRED FOR ALL BOLTS BEFORE INSTALLATION.
5. ALL MATERIAL NOTED AS "FCM" SHALL MEET THE FOLLOWING REQUIREMENTS:
   A. MILL ORDERS SHALL SPECIFY KILLED FINE-GRAIN PRACTICE FOR STEEL USED IN FCMs (D1.5 12.4.2).
   B. MILL ORDER SHALL STIPULATE THAT NO WELDED REPAIRS SHALL BE PERFORMED BY THE PRODUCING MILL (D1.5 12.4.3).
   C. THE TOUGHNESS OF BASE-METAL SHAPES, PLATES, AND BARS SHALL BE AS SPECIFIED IN AASHTO M270M (ASTM A709M) FOR FRACTURE CRITICAL IMPACT TEST REQUIREMENTS. THE GRADE OF STEEL METHOD OF JOINING AND AASHTO TEMPERATURE ZONE IN WHICH THE STRUCTURE WILL BE CONSTRUCTED SHALL BE NOTED IN THE MILL ORDER (D1.5 12.4.4.5).
   D. MILL ORDERS SHALL SPECIFY SUPPLEMENTARY REQUIREMENTS FOR CVN TEST VALUES MEETING THE REQUIREMENTS OF D1.5 12.

FABRICATION AND WORKMANSHIP:

1. CJP CORNERS OF ALL BEARING STIFFENERS, CROSSFRAME CONNECTION PLATES AND INTERMEDIATE STIFFENERS AS NOTED ON DETAIL SHEETS AND TERMINATE WELD AS SHOWN IN THE WELD TERMINATION DETAIL ON THIS SHEET.
2. ALL RE-ENTRANT CUTS SHALL HAVE A MINIMUM RADIUS OF ONE INCH UNLESS NOTED.
3. HOLES NOTED "DA" ON THE DETAIL SHEETS SHALL BE EITHER SUB-PUNCHED OR SUB-DRILLED $\frac{3}{16}$ UNDERSIZED AND REAMED FULL SIZE, HOLES NOTED "HC" ON DETAIL SHEETS SHALL BE DRILLED FULL SIZE.
4. THE WEIGHTS SHOWN ON DETAIL SHEETS ARE GROSS WEIGHTS. DO NOT USE THESE WEIGHTS FOR LIFTING OF SHIPPING PURPOSES.
5. ALL FIELD SPLICE MATERIAL SHALL BE MATCH MARKED AND BOLTED BEFORE SHIPMENT. SEE MATCH MARKING SCHEME ON SHOP ASSEMBLY DRAWINGS.
6. WHEN "FCM" MATERIAL MUST BE MARKED WITH HEAT NUMBERS OR OTHER IDENTIFYING MARKS BY DIE STAMPING, LOW-STRESS DIES SHALL BE USED (D1.5 12.4.6).
7. WHEN "FCM" MATERIAL IS DESIGNATED, REFER TO THE FOLLOWING D1.5 PROVISIONS:
   12.10 THERMAL CUTTING
   12.11 REPAIR OF BASE METAL
   12.12 STRAIGHTENING, CURVING, AND CAMBERING
   12.13 TACK WELDS AND TEMPORARY WELDS
8. DIMENSIONAL TOLERANCES PER AASHTO AND AWS D1.5 SECTION 3.5.

SHOP CLEANING NOTES:

PER DESIGN DRAWING SPECIFICATIONS, ALL MATERIAL IS TO BE BLAST CLEANED PER SSPC-SP5.

SHOP PAINTING NOTES:

PLATE GIRDERS SHALL BE SPRAY METALIZED WITH Zn OR Zn/AL ALLOY AND COATED WITH PIGMENTED SEALER SYSTEM & TOP COATED IN CONFORMANCE WITH PROJECT SPECS SECTION 513 - SYSTEM 10, SSPC-CS 23.00 AND AWS C2.18.

SHOP WELDING AND TESTING NOTES:

WELDING:
1. WELDING SHALL BE IN ACCORDANCE WITH ANSI/AASHTO/AWS BRIDGE WELDING CODE, D1.5, EXCEPT AS MODIFIED BY THE CONTRACT DOCUMENTS AND APPLIED SHOP WELDING PROCEDURES (SEE DOCUMENTATION SEC 4.1, NOTE "N").
2. WHERE MATERIAL IS DESIGNATED "FCM":
   A. SMAW, SAW, FCAW, AND GMAW WITH METAL CORED ELECTRODES MAY BE USED TO CONSTRUCT OR REPAIR (D1.5 12.5.1).
   B. ESW AND EGW SHALL BE PROHIBITED FOR WELDING FCMs. GMAW (EXCEPT AS ALLOWED IN 12.5.1) MAY ONLY BE USED WITH THE APPROVAL OF THE ENGINEER. WHEN GMAW (EXCEPT AS ALLOWED IN 12.5.1) IS ALLOWED, QUALIFICATION TESTS, PROCEDURE CONTROL AND NDT SHALL BE AS SPECIFIED BY THE ENGINEER (D1.5 12.5.2).
   C. ALL WELDING CONSUMABLES SHALL BE HEAT OR LOT TESTED PER D1.5 12.6.1. HANDLING AND MANAGEMENT OF ELECTRODES AND FILLER METALS PER D1.5 12.6.2 THROUGH 12.6.2.6.
   D. GROOVE WELD STRENGTH:
      (1) GROOVE WELDS REQUIRED TO HAVE A YIELD STRENGTH EQUAL TO THE MINIMUM SPECIFIED YIELD STRENGTH OF THE BASE METAL SHALL HAVE A CVN TEST VALUE EQUAL TO, OR EXCEEDING THAT, SPECIFIED IN D1.5 TABLE 12.1 (D1.5 12.6.4.1).
      (2) ALL WELDS ALLOWED TO HAVE UNDERMATCHING YIELD STRENGTH SHALL HAVE A MINIMUM CVN TEST VALUE OF 25 FOOT POUNDS AT -20 DEGREES F (D1.5 12.6.4.2).
   E. SEE D1.5 12.14 FOR PREHEAT AND INTERPASS TEMPERATURE CONTROL.
   F. SEE D1.5 12.15 FOR POSTWELD THERMAL TREATMENTS.

TESTING:
1. NONDESTRUCTIVE TESTING SHALL BE IN ACCORDANCE WITH ANSI/AASHTO/AWS BRIDGE WELDING CODE D1.5, AND AISC CERTIFIED STEEL FABRICATOR PROGRAM, MAJOR BRIDGE CATEGORY AS SHOWN ON THE DETAIL ENGS.
2. ALL WELDS SHALL BE TESTED AND INSPECTED AS INDICATED ON DRAWINGS PER D1.5 CLAUSE 6.
3. ADDITIONAL TEST AND INSPECTION REQUIRED FOR "FCM" ALSO NOTED ON THE DRAWINGS INCLUDES:
   A. BUTT JOINTS IN TENSION AND REPAIRED GROOVE WELDS IN BUTT JOINTS SHALL BE QC INSPECTED BY BOTH RT AND UT (D1.5 12.16.2.1).
   B. ALL TENSION AND REPAIRED GROOVE WELDS IN T- AND CORNER JOINTS SHALL BE QC INSPECTED BY UT (D1.5 12.16.2.2).
   C. FILLET WELD REPAIRS SHALL BE INSPECTED BY MT. THE TEST LENGTH SHALL INCLUDE 40% OF THE LENGTH OF THE REPAIR, AND, WHEN APPROPRIATE, AT LEAST 12 INCHES BEYOND THE ENDS OF EACH EACH REPAIR (D1.5 12.16.2.3).
   D. RT SHALL BE DONE USING HOLE-TYPE IQIS AS DESCRIBED IN D1.5 TABLE 6.1 AND FIGURE 6.1E (D1.5 12.16.3).
   E. RT AND PRELIMINARY VISUAL INSPECTIONS MAY BE PERFORMED AS SOON AS WELDS HAVE COOLED. UT, MT, AND FINAL VISUAL INSPECTION SHALL BE DONE AFTER THE WELDS HAVE COOLED TO AMBIENT TEMPERATURE FOR AS LEAST:
      (1) FILLET WELDS ON STEEL WITH A MINIMUM SPECIFIED YIELD STRENGTH OF 50 KSI OR LESS, 24 HOURS.
      (2) FILLET WELDS IN STEEL WITH A MINIMUM SPECIFIED YIELD STRENGTH OVER 50 KSI, 48 HOURS.
      (3) GROOVE WELDS IN STEEL WITH A MINIMUM SPECIFIED YIELD STRENGTH OF 50 KSI OR LESS, 24 HOURS WHEN THE WELD DEPTH IS 2 INCHES OR LESS, AND 48 HOURS WHEN THE WELD DEPTH IS GREATER THAN 2 INCHES.
      (4) GROOVE WELDS IN STEEL WITH A MINIMUM SPECIFIED YIELD STRENGTH OVER 50 KSI, 48 HOURS WHEN THE WELD DEPTH IS 2 INCHES OR LESS, AND 72 HOURS WHEN THE WELD DEPTH IS GREATER THAN 2 INCHES. (D1.5 12.16.4)
4. FOR "FCM" MATERIAL AND WELDS FOLLOW INSPECTION AND RECORD KEEPING PER D1.5 12.16.5.

REPAIRS OF "FCM" MATERIAL OR WELDS:
1. REPAIR WELDING SHALL BE DEFINED AS ANY WELDING, INCLUDING REMOVAL OF WELD OR BASE METAL IN PREPARATION FOR WELDING, NECESSARY TO CORRECT UNACCEPTABLE DISCONTINUITIES IN MATERIALS OR WORKMANSHIP. WELDED REPAIRS SHALL BE CATEGORIZED AS NONCRITICAL (D1.5 12.17.2) OR CRITICAL (12.17.3) WITH SEPARATE REQUIREMENTS FOR EACH (D1.5 12.17).
2. ALL REPAIR WELDING SHALL BE DONE IN CONFORMANCE WITH AN APPROVED WPS. THE WPS MAY BE PREAPPROVED AS DESCRIBED IN D1.5 12.17.2 OR INDIVIDUALLY APPROVED AS DESCRIBED IN D1.5 12.17.3 (D1.5 12.17.1).

STANDARD ABBREVIATIONS:

BRG	BEARING	NC	NUMERICAL CONTROL
BTS	BOLT TO SHIP	NDT	NONDESTRUCTIVE TESTING
CL	CENTERLINE	NS	NEAR SIDE
CVN	CHARPY V-NOTCH TESTING	N.T.S.	NOT TO SCALE
DA	DRILL ASSEMBLED	ORG	ORTHOTROPIC BOX GIRDER
DEV	DEVELOPED	OPP.	OPPOSITE
DT	DRILLING TEMPLATE	PC	POINT OF CURVATURE
DOR	DIRECTION OF ROLLING	PCC	POINT OF COMPOUND CURVE
DWG	DRAWING	PT	POINT OF TANGENCY
FCP	FRACTURE CONTROL PLAN	R	RADIUS
FCM	FRACTURE CRITICAL MEMBER OR FRACTURE CRITICAL MATERIAL	RA	REAM ASSEMBLED
		RT	RADIOGRAPHIC NDT
FCW	FRACTURE CRITICAL WELD	SECT.	SECTION
FLG	FLANGE	STIFF.	STIFFENER
FS	FAR SIDE OR FIELD SPLICE	U.N.	UNLESS NOTED
FWS	FIELD WELD SHRINKAGE	UT	ULTRASONIC NDT
HCL	HORIZONTAL CONTROL LINE	WP	WORK POINT
MK	MARK	WS	WELD SHRINKAGE
MATL	MATERIAL	WT	WRENCH TIGHT BOLTS (SNUG TIGHT)
MT	MAGNETIC PARTICLE NDT		

MATCH MARKING PROCEDURE

1. ALL HORIZONTAL BRACES TO BE MATCH MARKED AFTER ASSEMBELY.
2. THE MATCH MARKS CONSIST OF THE MARK WITH A SUFFIX. THE MARKINGS ARE STENCILED PERMANENTLY ONTO THE STEEL AT THE END OF THE BRACE. THE CORRESPONDING SUFFIX (A,D,C, ETC.,) IS STENCILED NEAR THE BRACE ONTO THE GIRDER.

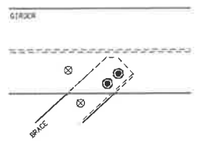

MATCH MARKING PROCEDURE

⊗ DENOTES MATCHING SUFFIX

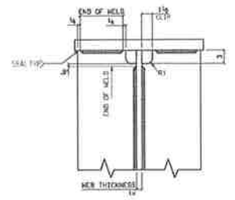

WELD DETAIL - STIFFENER TERMINATIONS

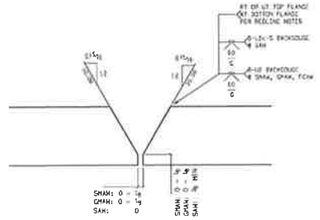

CJP WELD FLANGE

REF: AWS D1.5 JOINT B-U2 AND B-L2c
B-L2c: FLAT POSITION ONLY

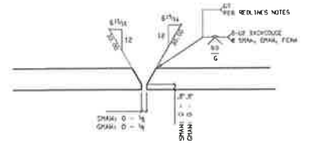

CJP WELD WEB

REF: AWS D1.5 JOINT B-U2

Record Drawings have been reviewed by the Project Engineer, and represent to the best of my knowledge, the project as constructed.

PE _____ Date 12/10/15

FOR FABRICATION

Dave Hankins 1-22-15

State of Alaska
Dept. of Transportation and Public Facilities
Marine Facilities Engineering

CONTRACTOR SUBMITTAL REVIEW

Checking is only for conformance with the design concepts of the Project and compliance with the information given in the Contract Documents. The Contractor is responsible for dimensions to be confirmed and correlated at the job site for information that pertains solely to the fabrication process or to techniques of construction for coordination of the work of all trades.

ACCEPTED ✔

ACCEPTED AS NOTED _____

RETURNED FOR CORRECTION _____

02/09/2015 Tim Daggett

Date Design Engineer

TOLERANCES:

(UNLESS OTHERWISE SPECIFIED)
3 PLACE DECIMALS +/- .01
2 PLACE DECIMALS +/- .03
FRACTIONS +/- 1/16
ANGLES +/- 2 DEGREES
MACHINE FINISHES 125 √ U.N.

REV	DESCRIPTION	BY	CHK	DATE
0	FOR FABRICATION	RBP	KB	Jan 12 2015
A	FOR APPROVAL	RBP	KB	Oct 28 2014

BILL OF MATERIAL

QTY Total	Piece Mark	QTY Unit	Description	Length	Remarks	Weight Unit

BILL OF MATERIAL

QTY Total	Piece Mark	QTY Unit	Description	Length	Remarks	Weight Unit

Total weight: 0

DETAILING
JOB 2265
REF: AB00

FABRICATION TECHNICAL SERVICES, INC
307 N. LINCOLN STE. B POST FALLS, ID 83854
(208) 457-8282 fax (208) 457-8208
EMAIL: kevin@FTSsteeldetailing.com

HOLES DIA UNO $\frac{13}{16}$
SURF PREP: SEE B.O.M.
FINISH: SEE B.O.M.

WELD $\frac{3}{16}$ FILLET U.N.O. (E70XX)
W.P. (TAILS)
COL BASE PLATES ARE ALWAYS SECTION CUTS LOOKING DOWN

JESSE ENGINEERING CO.
1840 Marine View Drive, Tacoma, Washington 98422 Ph: 253-922-7433

PROJECT
IFA HOLLIS/CLARK BAY FERRY TERMINAL IMPROVEMENTS

CONTRACTOR
WESTERN MARINE CONSTRUCTION

DESCRIPTION
TRANSFER SPAN GIRDER

DATE 10-10-14
JESSE 203940
DWG NO 400.12

SHEET SIZE 24X36
09:08:02 AM
Jan 12 2015

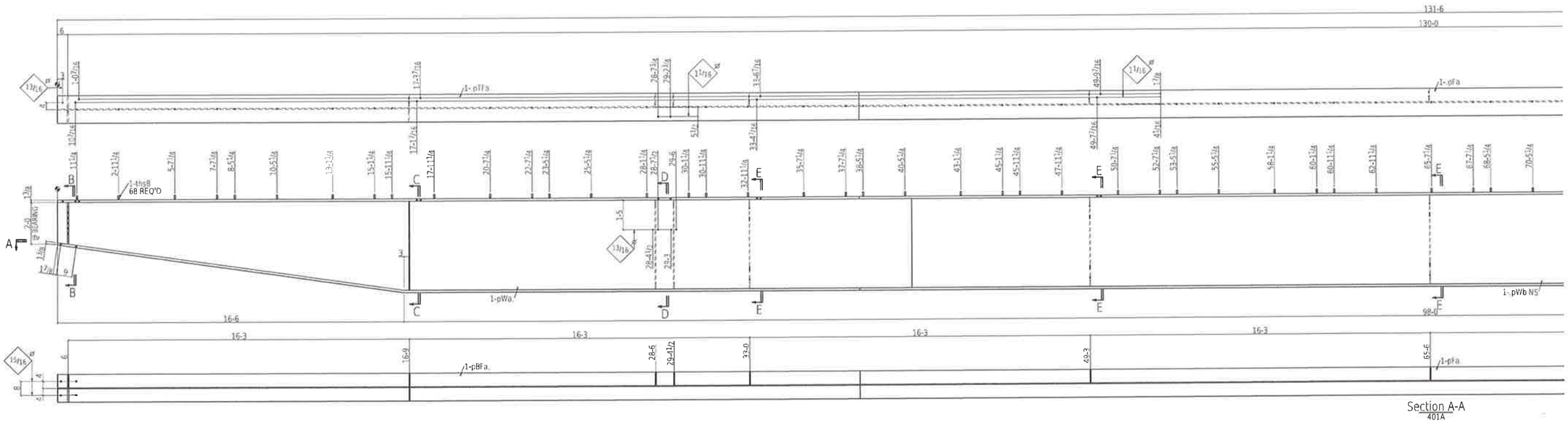

ONE TRANSFER GIRDER 401A

Record Drawings have been reviewed by the Project Engineer, and represent to the best of my knowledge, the project as constructed.

PE _____ Date 12/10/15

FOR FABRICATION
Dave Hankins 1-22-15

State of Alaska
Dept. of Transportation and Public Facilities
Marine Facilities Engineering

CONTRACTOR SUBMITTAL REVIEW

Checking is only for conformance with the design concepts of the Project and compliance with the information given in the Contract Documents. The Contractor is responsible for dimensions to be confirmed and correlated at the job site for information that pertains solely to the fabrication process or to techniques of construction for coordination of the work of all trades

ACCEPTED ✔
ACCEPTED AS NOTED
RETURNED FOR CORRECTION
02/09/2015 Tim Doggett
Date Design Engineer

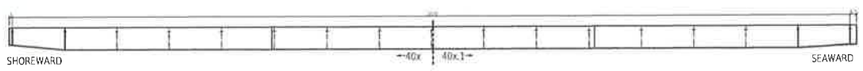

NOTES:
1. SEAL ALL WELDS.
2. SEE SHEET A400 FOR FULL ASSEMBLY.
3. SEE SHEET 401.1 FOR BALANCE OF SPAN.
4. SEE SHEET 401.2 FOR SECTIONS INDICATED.
5. SEE SHEET 400.11 FOR GIRDER CAMBERS AND WELD DETAILS.

TOLERANCES:
(UNLESS OTHERWISE SPECIFIED)
3 PLACE DECIMALS +/- .01
2 PLACE DECIMALS +/- .03
FRACTIONS +/- 1/16
ANGLES +/- 2 DEGREES
MACHINE FINISHES 125 √ U.N.

REV	DESCRIPTION	BY	CHK	DATE
0	FOR FABRICATION	BRP	KB	Jan 12 2015
A	FOR APPROVAL	BRP	KB	Oct 28 2014

BILL OF MATERIAL

QTY total	Piece Mark	QTY unit	Description	Length		Remarks	Weight Unit
ONE	401A		TRANSFER GIRDER			SPRAY METALIZED	32145
1	pSFa	1	PL 1 3/4 x 46 1/16	1	4	BENT A709-50	7876
1	pSFb	1	PL 1 3/4 x 46 1/16	1	4	BENT A709-50	7873
1	pfa	1	PL 1 3/8 x 16	55	0	A709-50	4117
1	pFa	1	PL 1 3/8 x 16	55	0	A709-50	4117
1	pTFa	1	PL 1 3/8 x 16	38	3	A709-50	2863
1	pTFa	1	PL 1 3/8 x 16	38	3	A709-50	2863
1	p227	1	PL 2 1/4 x 7 1/2	2	4	A36	45
1	p233	1	PL 2 1/4 x 7 1/2	2	4	A36	45
1	p211	1	PL 2 1/4 x 7 1/2	2	0	A36	38
1	p225	1	PL 2 1/4 x 7 1/2	2	0	A36	38
1	pWa	1	PL 1 1/2 x 51 1/4	50	6	A709-50	4369
1	pWa	1	PL 1 1/2 x 51 1/4	40	9	A709-50	3553
1	pWc	1	PL 1 1/2 x 51 1/4	40	9	A709-50	3553
1	p16	7	PL 2 1/2 x 7 1/2	4	3 3/4	A36	54
5	p251	6	PL 1 1/2 x 7 1/2	4	3 3/4	A36	54
1	p266	1	PL 1 1/2 x 7 1/2	2	10 5/8	A36	37

BILL OF MATERIAL

QTY total	Piece Mark	QTY unit	Description	Length		Remarks	Weight Unit
1	p266	1	PL 1 1/2 x 7 1/2	2	10 5/8	A36	37
68	thsB	68	TRD 3/4	0	7 1/2	SS316	0
			FIELD BOLTS				
8			7/8 Dia A325 DTI	0	3 3/4	+DTI WASH	

Total weight: 32145

DETAILING
JOB 2265
REF A400

FABRICATION TECHNICAL SERVICES, INC.
307 N. LINCOLN STE. B POST FALLS ID 83854
(208) 457-8282 fax (208) 457-8208
EMAIL: kevin@FTSsteeldetailing.com

HOLES DIA UNO 13/16
SURF PREP SEE B.O.M.
FINISH SEE B.O.M.

WELD 3/16 FILLET U.N.O. (E70XX)
W.P. (TAILS)
COL BASE PLATES ARE ALWAYS SECTION CUTS LOOKING DOWN

JESSE ENGINEERING CO.
1840 Marine View Drive, Tacoma, Washington 98422 Ph. 253-922-7433

PROJECT: IFA HOLLIS/CLARK BAY FERRY TERMINAL IMPROVEMENTS
CONTRACTOR: WESTERN MARINE CONSTRUCTION
DESCRIPTION: 130' TRANSFER BRIDGE
DATE: 10-27-14
JESSE: 203940
SHEET: 401

SHEET SIZE 24X36
09:08:03 AM
Jan 12 2015

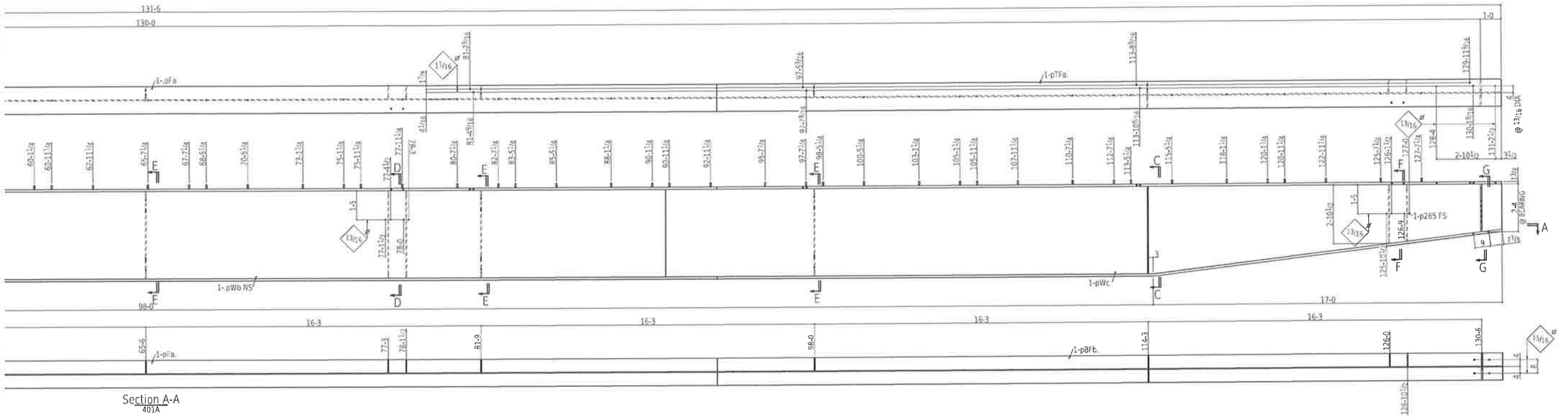

ONE TRANSFER GIRDER 401A

State of Alaska
Dept. of Transportation and Public Facilities
Marine Facilities Engineering

CONTRACTOR SUBMITTAL REVIEW

Checking is only for conformance with the design concepts of the Project and compliance with the information given in the Contract Documents. The Contractor is responsible for dimensions to be confirmed and correlated at the job site for information that pertains solely to the fabrication process or to techniques of construction for coordination of the work of all trades.

ACCEPTED ✔
ACCEPTED AS NOTED
RETURNED FOR CORRECTION

02/09/2015 Tim Doggett
Date Design Engineer

Record Drawings have been reviewed by the Project Engineer, and represent to the best of my knowledge, the project as constructed.

PE _____ Date 12/4/15

FOR FABRICATION
Dave Hankins 1-22-15

NOTES:
1. SEAL ALL WELDS.
2. SEE SHEET A400 FOR FULL ASSEMBLY.
3. SEE SHEET 401 FOR BALANCE OF SPAN.
4. SEE SHEET 401.2 FOR SECTIONS INDICATED.
5. SEE SHEET 400.11 FOR GIRDER CAMBERS AND WELD DETAILS.

TOLERANCES:
(UNLESS OTHERWISE SPECIFIED)
3 PLACE DECIMALS +/- .01
2 PLACE DECIMALS +/- .03
FRACTIONS +/- 1/16
ANGLES +/- 2 DEGREES
MACHINE FINISHES 125 √U.N.

REV	DESCRIPTION	BY	CHK	DATE
0	FOR FABRICATION	RRP	KB	Jan 12 2015
A	FOR APPROVAL	RRP	KB	Oct 28 2014

BILL OF MATERIAL

QTY total	Piece Mark	QTY unit	Description	Length	Remarks	Weight Unit

BILL OF MATERIAL

QTY total	Piece Mark	QTY unit	Description	Length	Remarks	Weight Unit

Total weight: 0

DETAILING
JOB: 2265
REF: A400

FABRICATION TECHNICAL SERVICES, INC.
307 N. LINCOLN STE. B, POST FALLS, ID 83854
(208) 457-8282 fax: (208) 457-8208
EMAIL: kevin@FTSsteeldetailing.com

HOLES DIA UNO 13/16
SURF PREP: SEE B.O.M.
FINISH: SEE B.O.M.

WELD 3/16 FILLET U.N.O. (E70XX)
W.P. (TAILS)
COL BASE PLATES ARE ALWAYS SECTION CUTS LOOKING DOWN

JESSE ENGINEERING CO.
1840 Marine View Drive, Tacoma, Washington 98422 Ph: 253-922-7433

PROJECT: IFA HOLLIS/CLARK BAY FERRY TERMINAL IMPROVEMENTS
CONTRACTOR: WESTERN MARINE CONSTRUCTION
DESCRIPTION: 130' TRANSFER BRIDGE

DATE: 10-27-14
JESSE: 203940
DRAWING: 401.1

SHEET SIZE 24X36
09:08:03 AM
Jan 12 2015

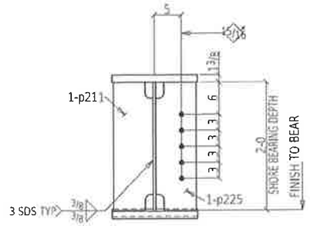

Section B-B
401A

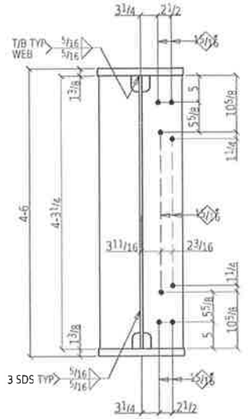

Section C-C
401A

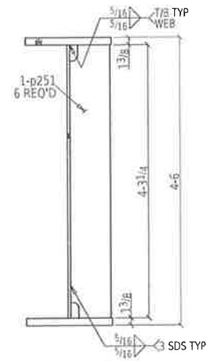

Section D-D
401A

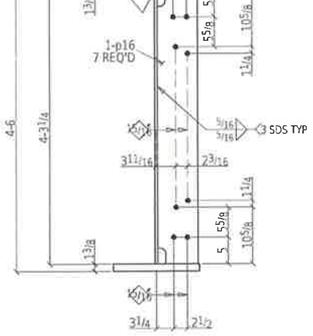

Section E-E
401A



Section F-F
401A

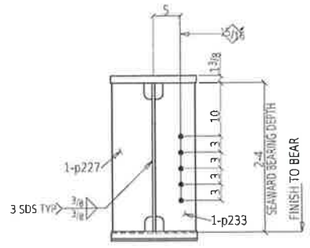

Section G-G
401A

Record Drawings have been reviewed by the Project Engineer, and represent to the best of my knowledge, the project as constructed.

PE _____ Date 12/10/15

FOR FABRICATION

Dave Hankins 1-22-15

State of Alaska
Dept. of Transportation and Public Facilities
Marine Facilities Engineering

CONTRACTOR SUBMITTAL REVIEW

Checking is only for conformance with the design concepts of the Project and compliance with the information given in the Contract Documents. The Contractor is responsible for dimensions to be confirmed and correlated at the job site for information that pertains solely to the fabrication process or to techniques of construction for coordination of the work of all trades.

ACCEPTED ✓

ACCEPTED AS NOTED

RETURNED FOR CORRECTION

02/09/2015 Tim Doggett

Date Design Engineer

SHEET SIZE 24X36

09:08:04 AM

Jan 12 2015

NOTES:
1. SEAL ALL WELDS.
2. SEE SHEET A400 FOR FULL ASSEMBLY.
3. SEE SHEETS 401 AND 401.1 FOR SECTION CUTS.

TOLERANCES:

(UNLESS OTHERWISE SPECIFIED)
3 PLACE DECIMALS +/- .01
2 PLACE DECIMALS +/- .03
FRACTIONS +/- 1/16
ANGLES +/- 2 DEGREES
MACHINE FINISHES 125 √U.N.

REV	DESCRIPTION	BY	CHK	DATE
0	FOR FABRICATION	RAP	KR	Jan 12 2015
A	FOR APPROVAL	RAP	KR	Oct 28 2014

BILL OF MATERIAL

QTY total	Piece Mark	QTY unit	Description	Length	Remarks	Weight Unit

BILL OF MATERIAL

QTY total	Piece Mark	QTY unit	Description	Length	Remarks	Weight Unit

Total weight : 0

DETAILING
JOB: 2265
REF: A400

FABRICATION TECHNICAL SERVICES, INC.
307 N. LINCOLN STE. B. POST FALLS, ID 83854
(208) 457-8282 fax (208) 457-8208
EMAIL kevin@FTSsteeldetailing.com

HOLES DIA UNO: 13/16
SURF PREP: SEE B.O.M.
FINISH: SEE B.O.M.

WELD 3/16 FILLET U.N.O. (E70XX)
W.P. (TAILS)
COL BASE PLATES ARE ALWAYS SECTION CUTS LOOKING DOWN

JESSE ENGINEERING CO.

1840 Marine View Drive, Tacoma, Washington 98422 Ph. 253-922-7433

PROJECT
IFA HOLLIS/CLARK BAY
FERRY TERMINAL IMPROVEMENTS

CONTRACTOR
WESTERN MARINE CONSTRUCTION

DESCRIPTION
130' TRANSFER BRIDGE

DATE 10-27-14
JOB NO 203940
SHEET NO 401.2

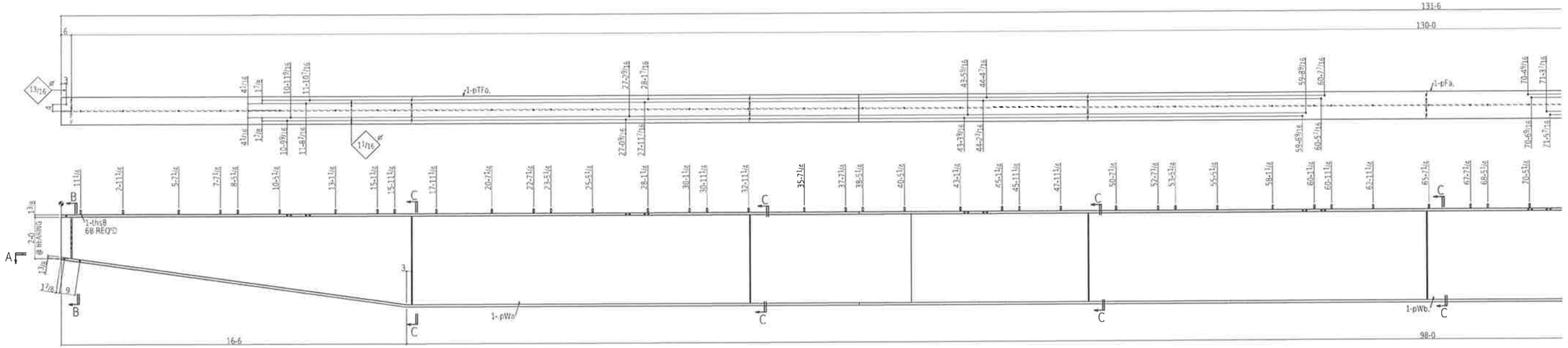

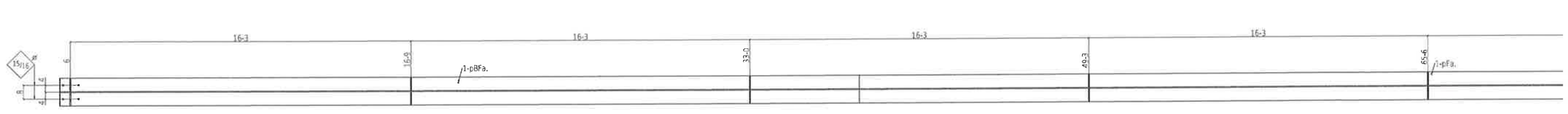

Section A-A
402A

State of Alaska
Dept. of Transportation and Public Facilities
Marine Facilities Engineering

CONTRACTOR SUBMITTAL REVIEW

Checking is only for conformance with the design concepts of the Project and compliance with the information given in the Contract Documents. The Contractor is responsible for dimensions to be confirmed and correlated at the job site for information that pertains solely to the fabrication process or to techniques of construction for coordination of the work of all trades

ACCEPTED ✔
ACCEPTED AS NOTED
RETURNED FOR CORRECTION
02/09/2015 Tim Doggett
Date Design Engineer

Record Drawings have been reviewed by the Project Engineer, and represent to the best of my knowledge, the project as constructed.
PE _____ Date 12/10/15

ONE TRANSFER GIRDER 402A

FOR FABRICATION
Dave Hankins 1-22-15

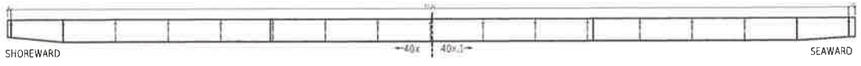

NOTES:
1. SEAL ALL WELDS.
2. SEE SHEET A400 FOR FULL ASSEMBLY.
3. SEE SHEET 402.1 FOR BALANCE OF SPAN.
4. SEE SHEET 402.2 FOR SECTIONS INDICATED.
5. SEE SHEET 400.11 FOR GIRDER CAMBERS AND WELD DETAILS.

TOLERANCES:
(UNLESS OTHERWISE SPECIFIED)
3 PLACE DECIMALS +/- .01
2 PLACE DECIMALS +/- .03
FRACTIONS +/- 1/16
ANGLES +/- 2 DEGREES
MACHINE FINISHES 125 √U.N.

REV	DESCRIPTION	BY	CHK	DATE
B	FOR FABRICATION	BRP	KR	Jan 12 2015
A	FOR APPROVAL	BRP	KR	Oct 28 2014

BILL OF MATERIAL

QTY total	Piece Mark	QTY unit	Description	Length		Remarks	Weight Unit
ONE	402A		TRANSFER GIRDER			SPRAY METALIZED	32128
1	pBFa	1	PL 13/16x46 1/16	1	4	BENT A709-50	2876
1	pBFb	1	PL 13/16x46 0/16	1	4	BENT A709-50	2873
1	pFa	1	PL 13/16x16	55	0	A709-50	4117
1	pFa	1	PL 13/16x16	55	0	A709-50	4117
1	pTFa	1	PL 13/16x16	38	3	A709-50	2863
1	pTFa	1	PL 13/16x16	38	3	A709-50	2863
4	p233	2	PL 9/16x7 1/2	2	4	A36	45
4	p225	2	PL 9/16x7 1/2	2	0	A36	36
1	pWa	1	PL 1 1/2x51 1/8	50	0	A709-50	4360
1	pWb	1	PL 1 1/2x51 1/8	40	9	A709-50	3553
1	pWc	1	PL 1 1/2x51 1/8	40	9	A709-50	3553
14	p16	14	PL 1/2x7 1/2	4	3 3/8	A36	54
68	ths8	68	TRD 7/8	0	2 1/2	SS316	0
			FIELD BOLTS				
8			7/8 Dia A325 DTI	0	3 3/4	WITH WASH	

BILL OF MATERIAL

QTY total	Piece Mark	QTY unit	Description	Length	Remarks	Weight Unit

Total weight: 32128

DETAILING: FABRICATION TECHNICAL SERVICES, INC.
JOB 2265 307 N. LINCOLN STE. B POST FALLS, ID 83854
REF A400 (208) 457-8282 fax (208) 457-8208
EMAIL: kevin@FTSsteeldetailing.com

HOLES DIA UNO 13/16 WELD 3/16 FILLET U.N.O. (E70XX)
SURF PREP SEE B.O.M. W.P. (TAILS)
FINISH SEE B.O.M. COL BASE PLATES ARE ALWAYS SECTION CUTS LOOKING DOWN

JESSE ENGINEERING CO.
1840 Marine View Drive, Tacoma, Washington 98422 Ph. 253-922-7433

PROJECT: IFA HOLLIS/CLARK BAY FERRY TERMINAL IMPROVEMENTS
CONTRACTOR: WESTERN MARINE CONSTRUCTION
DESCRIPTION: 130' TRANSFER BRIDGE
DATE: 10-27-14
JOB NO: 203940
DRAWING: 402

SHEET SIZE: 24X36
06:08:04 AM
Jan 12 2015

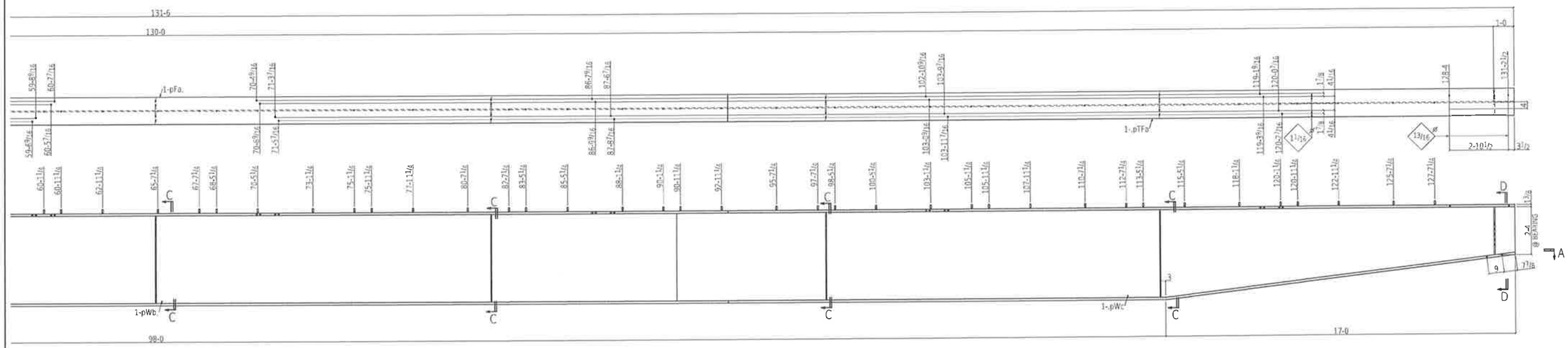

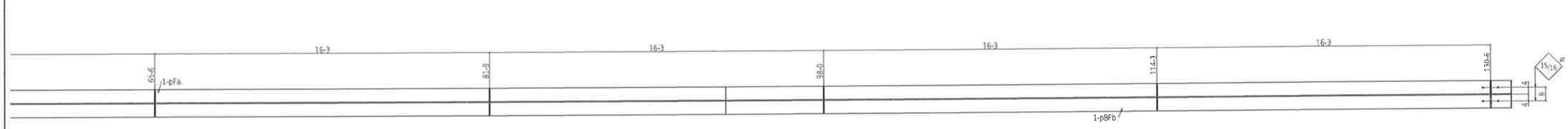

Section A-A
402A

ONE TRANSFER GIRDER 402A

State of Alaska
Dept. of Transportation and Public Facilities
Marine Facilities Engineering

CONTRACTOR SUBMITTAL REVIEW

Checking is only for conformance with the design concepts of the Project and compliance with the information given in the Contract Documents. The Contractor is responsible for dimensions to be confirmed and correlated at the job site for information that pertains solely to the fabrication process or to techniques of construction for coordination of the work of all trades.

ACCEPTED ✔
ACCEPTED AS NOTED
RETURNED FOR CORRECTION

02/09/2015 Tim Doggett
Date Design Engineer

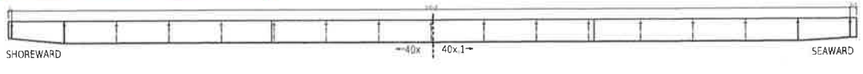

Record Drawings have been reviewed by the Project Engineer, and represent to the best of my knowledge, the project as constructed.

PE _____ Date 10/10/15

FOR FABRICATION
Dave Hankins 1-22-15

NOTES:
1. SEAL ALL WELDS.
2. SEE SHEET A400 FOR FULL ASSEMBLY.
3. SEE SHEET 402 FOR BALANCE OF SPAN.
4. SEE SHEET 402.2 FOR SECTIONS INDICATED.
5. SEE SHEET 400.11 FOR GIRDER CAMBERS AND WELD DETAILS.

TOLERANCES:
(UNLESS OTHERWISE SPECIFIED)
3 PLACE DECIMALS +/- .01
2 PLACE DECIMALS +/- .03
FRACTIONS +/- 1/16
ANGLES +/- 2 DEGREES
MACHINE FINISHES 125 √U.N.

REV	DESCRIPTION	BY	CHK	DATE
0	FOR FABRICATION	RRP	KB	Jan 12 2015
A	FOR APPROVAL	RRP	KB	Oct 28 2014

BILL OF MATERIAL

QTY total	Piece Mark	QTY unit	Description	Length	Remarks	Weight Unit

BILL OF MATERIAL

QTY total	Piece Mark	QTY unit	Description	Length	Remarks	Weight Unit

Total weight: 0

DETAILING
JOB: 2265
REF: A400

FABRICATION TECHNICAL SERVICES, INC.
307 N. LINCOLN STE. B, POST FALLS, ID 83854
(208) 457-8282 fax: (208) 457-8208
EMAIL: kevin@FTSsteeldetailing.com

HOLES DIA UNO 13/16
SURF PREP: SEE B.O.M.
FINISH: SEE B.O.M.

WELD 3/16 FILLET U.N.O. (E70XX)
W.P. (TAILS)
COL BASE PLATES ARE ALWAYS SECTION CUTS LOOKING DOWN

JESSE ENGINEERING CO.
1840 Marine View Drive, Tacoma, Washington 98422 Ph. 253-922-7433

PROJECT
IFA HOLLIS/CLARK BAY
FERRY TERMINAL IMPROVEMENTS

CONTRACTOR
WESTERN MARINE CONSTRUCTION

DATE 10-27-14
JOB NO 203940

DESCRIPTION
130' TRANSFER BRIDGE

SHEET NO 402.1

SHEET SIZE 24X36
09:08:05 AM
Jan 12 2015

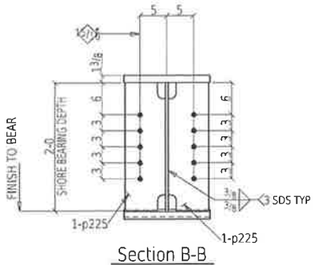

Section B-B
402A

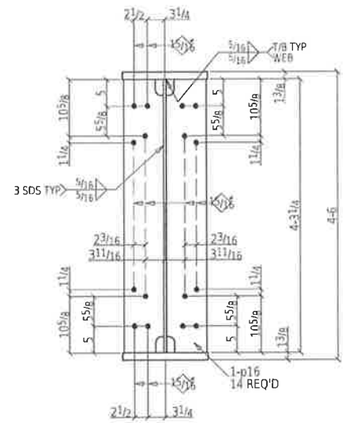

Section C-C
402A

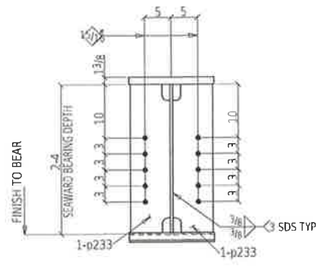

Section D-D
402A

Record Drawings have been reviewed by the Project Engineer, and represent to the best of my knowledge, the project as constructed.

PE _____ Date 12/10/15

FOR FABRICATION
Dave Hankins 1-22-15

State of Alaska
Dept. of Transportation and Public Facilities
Marine Facilities Engineering

CONTRACTOR SUBMITTAL REVIEW

Checking is only for conformance with the design concepts of the Project and compliance with the information given in the Contract Documents. The Contractor is responsible for dimensions to be confirmed and correlated at the job site for information that pertains solely to the fabrication process or to techniques of construction for coordination of the work of all trades.

ACCEPTED ✓
ACCEPTED AS NOTED
RETURNED FOR CORRECTION
02/09/2015 Tim Doggett
Date Design Engineer

NOTES:
1. SEAL ALL WELDS.
2. SEE SHEET A400 FOR FULL ASSEMBLY.
3. SEE SHEETS 402 AND 402.1 FOR SECTION CUTS.

TOLERANCES:
(UNLESS OTHERWISE SPECIFIED)
3 PLACE DECIMALS +/- .01
2 PLACE DECIMALS +/- .03
FRACTIONS +/- 1/16
ANGLES +/- 2 DEGREES
MACHINE FINISHES 125 √ U.N.

REV	DESCRIPTION	BY	CHK	DATE
0	FOR FABRICATION	RRP	KR	Jan 12 2015
A	FOR APPROVAL	RRP	KR	Oct 28 2014

BILL OF MATERIAL

QTY total	Piece Mark	QTY unit	Description	Length	Remarks	Weight Unit

BILL OF MATERIAL

QTY total	Piece Mark	QTY unit	Description	Length	Remarks	Weight Unit

Total weight : 0

DETAILING
JOB: 2265
REF: A400

FABRICATION TECHNICAL SERVICES, INC.
307 N. LINCOLN STE. B POST FALLS, ID 83854
(208) 457-8282 fax: (208) 457-8208
EMAIL: kevin@FTSsteeldetailing.com

HOLES DIA UNO: 13/16
SURF PREP: SEE B.O.M.
FINISH: SEE B.O.M.

WELD 3/16 FILLET U.N.O. (E70XX)
W.P. (TAILS)
COL BASE PLATES ARE ALWAYS SECTION CUTS LOOKING DOWN

JESSE ENGINEERING CO.
1840 Marine View Drive, Tacoma, Washington 98422 Ph. 253-922-7433

PROJECT: IFA HOLLIS/CLARK BAY FERRY TERMINAL IMPROVEMENTS
CONTRACTOR: WESTERN MARINE CONSTRUCTION
DATE: 10-27-14
JOB NO: 203940
DESCRIPTION: 130' TRANSFER BRIDGE
DRAWING: 402.2

SHEET SIZE: 24X36
09:08:05 AM
Jan 12 2015

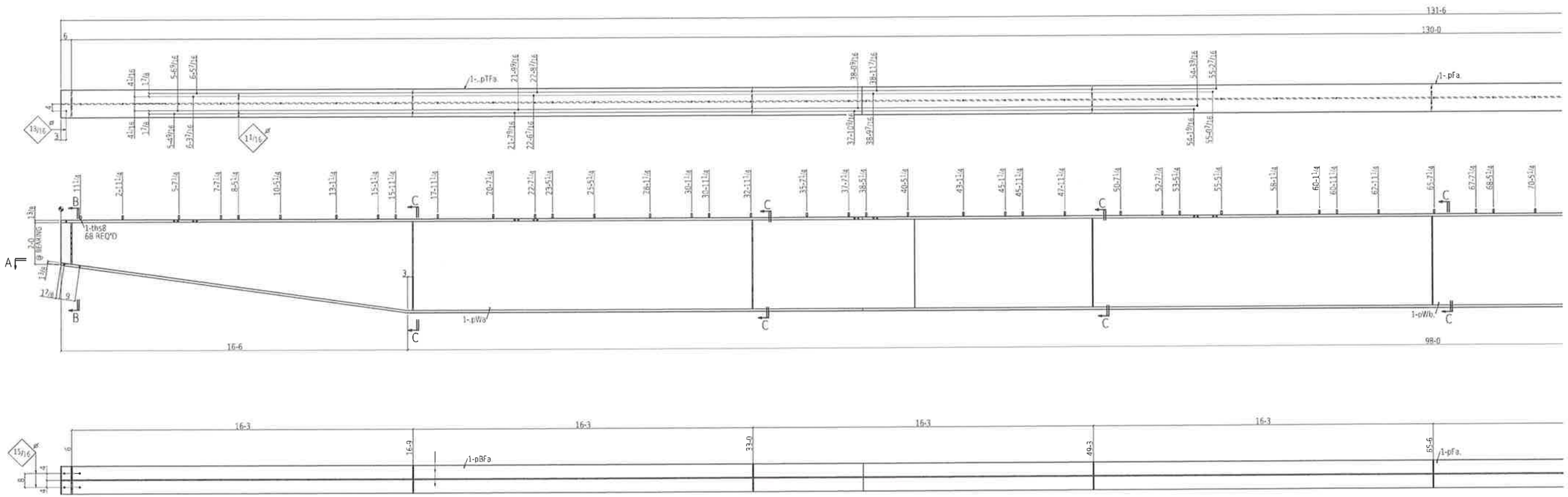

Section A-A
403A

ONE TRANSFER GIRDER 403A

Record Drawings have been reviewed by the Project Engineer, and represent to the best of my knowledge, the project as constructed.

PE [signature] Date 12/10/15

FOR FABRICATION
Dave Hankins 1-22-15

State of Alaska
Dept. of Transportation and Public Facilities
Marine Facilities Engineering

CONTRACTOR SUBMITTAL REVIEW

Checking is only for conformance with the design concepts of the Project and compliance with the information given in the Contract Documents. The Contractor is responsible for dimensions to be confirmed and correlated at the job site for information that pertains solely to the fabrication process or to techniques of construction for coordination of the work of all trades.

ACCEPTED ✓
ACCEPTED AS NOTED
RETURNED FOR CORRECTION

02/09/2015 Tim Doggett
Date Design Engineer

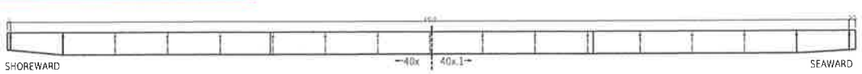

NOTES:
1. SEAL ALL WELDS.
2. SEE SHEET A400 FOR FULL ASSEMBLY.
3. SEE SHEET 403.1 FOR BALANCE OF SPAN.
4. SEE SHEET 403.2 FOR SECTIONS INDICATED.
5. SEE SHEET 400.11 FOR GIRDER CAMBERS AND WELD DETAILS.

TOLERANCES:
(UNLESS OTHERWISE SPECIFIED)
3 PLACE DECIMALS +/- .01
2 PLACE DECIMALS +/- .03
FRACTIONS +/- 1/16
ANGLES +/- 2 DEGREES
MACHINE FINISHES 125 √U.N.

REV	DESCRIPTION	BY	CHK	DATE
0	FOR FABRICATION	RRP	KB	Jan 12 2015
A	FOR APPROVAL	RRP	KB	Oct 28 2014

BILL OF MATERIAL

QTY total	Piece Mark	QTY unit	Description	Length		Remarks	Weight Unit
ONE	403A		TRANSFER GIRDER			SPRAY METALIZED	32128
1	pBFa	1	PL1 3/8x461 1/16	1	4	RENT A709-50	2876
1	pBFb	1	PL1 3/8x460 1/16	1	4	RENT A709-50	2873
1	pFa	1	PL1 3/8x16	55	0	A709-50	4117
1	pFa	1	PL1 3/8x16	55	0	A709-50	4117
1	pTFa	1	PL1 3/8x16	38	3	A709-50	2863
1	pTFa	1	PL1 3/8x16	38	3	A709-50	2863
2	p233	2	PL3/8x7 1/2	2	4	A36	45
2	p225	2	PL3/8x7 1/2	2	0	A36	38
1	pWa	1	PL1/2x51 1/4	50	0	A709-50	4360
1	pWa	1	PL1/2x51 1/4	40	9	A709-50	3553
1	pWb	1	PL1/2x51 1/4	40	9	A709-50	3553
14	p16	14	PL1/2x7 1/2	4	3 1/4	A36	54
68	ths8	68	TRO3/8	0	2 1/2	SS316	0
			FIELD BOLTS				
8			7/8 Dia A325 DTI	0	3 3/4	+1DTI WASH	

BILL OF MATERIAL

QTY total	Piece Mark	QTY unit	Description	Length	Remarks	Weight Unit

Total weight: 32128

DETAILING
JOB 2265
REF A400

FABRICATION TECHNICAL SERVICES, INC.
307 N. LINCOLN STE. B, POST FALLS, ID 83854
(208) 457-8282 fax (208) 457-8208
EMAIL kevin@FTSsteeldetailing.com

HOLES DIA UNO 13/16
SURF PREP SEE B.O.M.
FINISH SEE B.O.M.

WELD 3/16 FILLET U.N.O. (E70XX)
W.P. (TAILS)
COL BASE PLATES ARE ALWAYS SECTION CUTS LOOKING DOWN

JESSE ENGINEERING CO.
1840 Marine View Drive, Tacoma, Washington 98422 Ph. 253-922-7433

PROJECT
IFA HOLLIS/CLARK BAY
FERRY TERMINAL IMPROVEMENTS

CONTRACTOR
WESTERN MARINE CONSTRUCTION

DATE 10-27-14
JOB NO 203940

DESCRIPTION
130' TRANSFER BRIDGE

DWG NO 403

SHEET SIZE 24X36
09:08:05 AM
Jan 12 2015

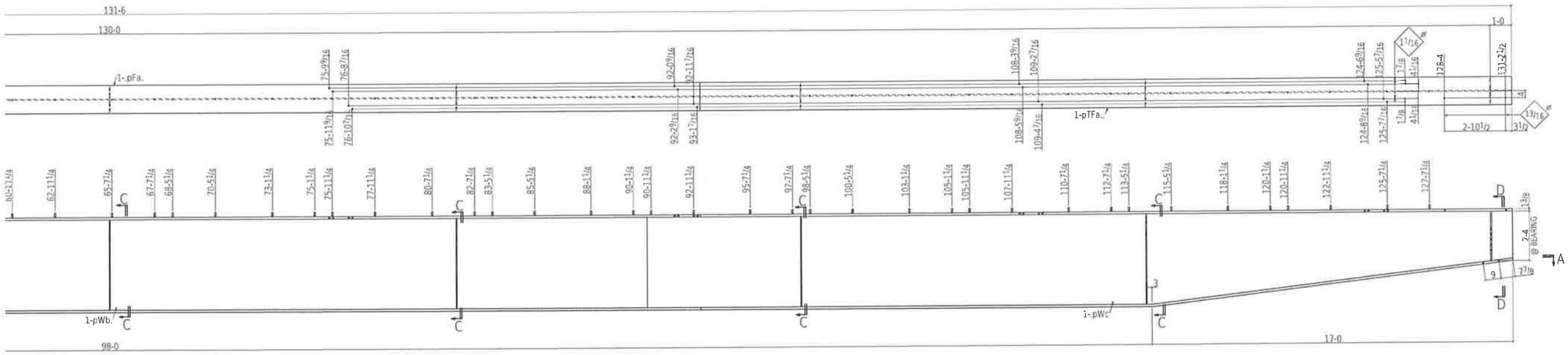

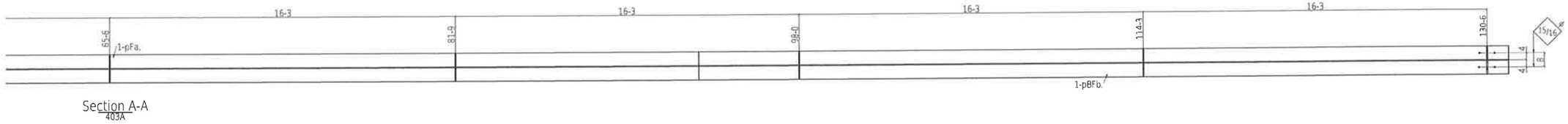

Section A-A
403A

ONE TRANSFER GIRDER 403A

State of Alaska
Dept. of Transportation and Public Facilities
Marine Facilities Engineering

CONTRACTOR SUBMITTAL REVIEW

Checking is only for conformance with the design concepts of the Project and compliance with the information given in the Contract Documents. The Contractor is responsible for dimensions to be confirmed and correlated at the job site for information that pertains solely to the fabrication process or to techniques of construction for coordination of the work of all trades.

ACCEPTED ✔
ACCEPTED AS NOTED
RETURNED FOR CORRECTION
02/09/2015 Tim Doggett
Date Design Engineer

Record Drawings have been reviewed by the Project Engineer, and represent to the best of my knowledge, the project as constructed.
PE [signature] Date 12/10/15

FOR FABRICATION
Dave Hankins 1-22-15

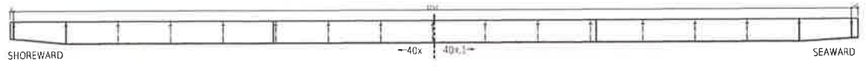

NOTES:
1. SEAL ALL WELDS.
2. SEE SHEET A400 FOR FULL ASSEMBLY.
3. SEE SHEET 403 FOR BALANCE OF SPAN.
4. SEE SHEET 403.2 FOR SECTIONS INDICATED.
5. SEE SHEET 400.11 FOR GIRDER CAMBERS AND WELD DETAILS.

TOLERANCES:
(UNLESS OTHERWISE SPECIFIED)
3 PLACE DECIMALS +/- .01
2 PLACE DECIMALS +/- .03
FRACTIONS +/- 1/16
ANGLES +/- 2 DEGREES
MACHINE FINISHES 125 √U.N.

REV	DESCRIPTION	BY	CHK	DATE
B	FOR FABRICATION	RRP	KR	Jan 12 2015
A	FOR APPROVAL	RRP	KR	Oct 28 2014

BILL OF MATERIAL

QTY total	Piece Mark	QTY unit	Description	Length	Remarks	Weight Unit

BILL OF MATERIAL

QTY total	Piece Mark	QTY unit	Description	Length	Remarks	Weight Unit

Total weight: 0

DETAILING
JOB 2265
REF A400

FABRICATION TECHNICAL SERVICES, INC.
307 N. LINCOLN STE. B POST FALLS, ID 83854
(208) 457-8282 fax (208) 457-8208
EMAIL kevin@FTSsteeldetailing.com

HOLES DIA UNO 13/16
SURF PREP SEE B.O.M.
FINISH SEE B.O.M.

WELD 3/16 FILLET U.N.O. (E70XX)
W.P. (TAILS)
COL BASE PLATES ARE ALWAYS SECTION CUTS LOOKING DOWN

JESSE ENGINEERING CO.
1840 Marine View Drive, Tacoma, Washington 98422 Ph. 253-922-7433

PROJECT
IFA HOLLIS/CLARK BAY
FERRY TERMINAL IMPROVEMENTS

CONSTRUCTION
WESTERN MARINE CONSTRUCTION

DATE 10-27-14
CONTRACT NO. 203940

DESCRIPTION
130' TRANSFER BRIDGE

DRAWING 403.1

SHEET SIZE 24X36
09:08:06 AM
Jan 12 2015

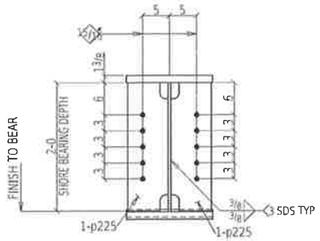

Section B-B
403A

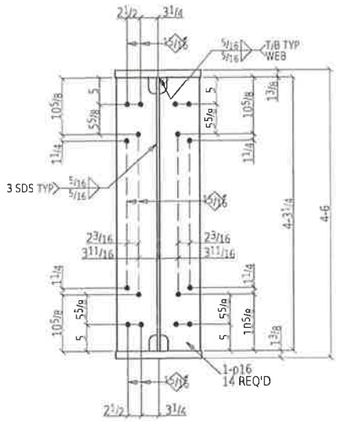

Section C-C
403A

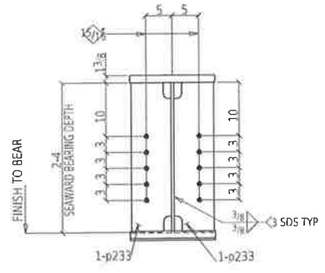

Section D-D
403A

Record Drawings have been reviewed by the Project Engineer, and represent to the best of my knowledge, the project as constructed.

PE [signature] Date 12/10/15

FOR FABRICATION
Dave Hawkins 1-22-15

State of Alaska
Dept. of Transportation and Public Facilities
Marine Facilities Engineering

CONTRACTOR SUBMITTAL REVIEW

Checking is only for conformance with the design concepts of the Project and compliance with the information given in the Contract Documents. The Contractor is responsible for dimensions to be confirmed and correlated at the job site for information that pertains solely to the fabrication process or to techniques of construction for coordination of the work of all trades

ACCEPTED ✓
ACCEPTED AS NOTED
RETURNED FOR CORRECTION

02/09/2015 Tim Doggett
Date Design Engineer

NOTES:
1. SEAL ALL WELDS.
2. SEE SHEET A400 FOR FULL ASSEMBLY.
3. SEE SHEETS 403 AND 403.1 FOR SECTION CUTS.

TOLERANCES:
(UNLESS OTHERWISE SPECIFIED)
3 PLACE DECIMALS +/- .01
2 PLACE DECIMALS +/- .03
FRACTIONS +/- 1/16
ANGLES +/- 2 DEGREES
MACHINE FINISHES 125 ✓U.N.

REV	DESCRIPTION	BY	CHK	DATE
0	FOR FABRICATION	RRP	KB	Jan 12 2015
A	FOR APPROVAL	RRP	KB	Oct 28 2014

BILL OF MATERIAL

QTY total	Piece Mark	QTY unit	Description	Length	Remarks	Weight Unit

BILL OF MATERIAL

QTY total	Piece Mark	QTY unit	Description	Length	Remarks	Weight Unit

Total weight : 0

DETAILING
JOB: 2265
REF: A400

FABRICATION TECHNICAL SERVICES, INC.
307 N. LINCOLN STE. B, POST FALLS, ID 83854
(208) 457-8282 fax (208) 457-8208
EMAIL: kevin@FTSsteeldetailing.com

HOLES DIA UNO: 13/16
SURF PREP: SEE B.O.M.
FINISH: SEE B.O.M.

WELD 3/16 FILLET U.N.O. (E70XX)
W.P. (TAILS)
COL BASE PLATES ARE ALWAYS SECTION CUTS LOOKING DOWN

JESSE ENGINEERING CO.
1840 Marine View Drive, Tacoma, Washington 98422 Ph: 253-922-7433

PROJECT
IFA HOLLIS/CLARK BAY
FERRY TERMINAL IMPROVEMENTS

CONTRACTOR
WESTERN MARINE CONSTRUCTION

DESCRIPTION
130' TRANSFER BRIDGE

DATE 10-27-14
JOB NO 203940
DRAWING 403.2

SHEET SIZE 24X36
09:08:06 AM
Jan 12 2015

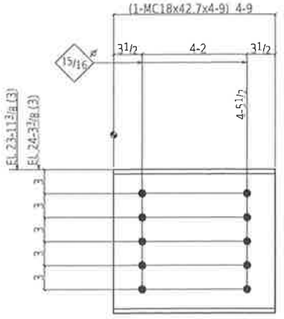

6 BEAMS 404A

W 18x7/16
F 3 15/16x5/8
K 1 3/8x1

SHOP NOTE
TOE DIRECTION NEAR SIDE

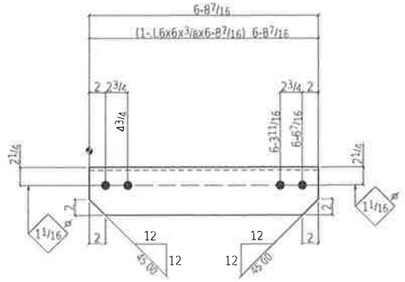

24 HORIZONTAL BRACES 404B

SHOP NOTE
TOE DIRECTION FAR SIDE

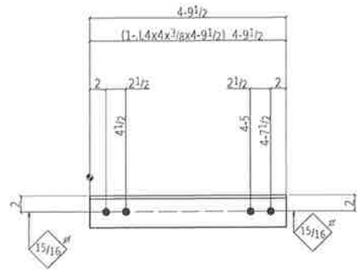

42 VERTICAL BRACES 404C

SHOP NOTE
TOE DIRECTION NEAR SIDE

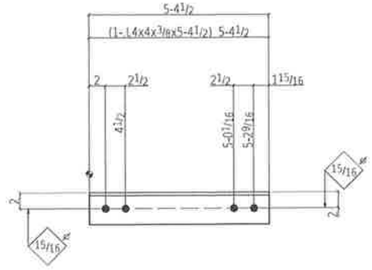

42 VERTICAL BRACES 404D

SHOP NOTE
TOE DIRECTION NEAR SIDE

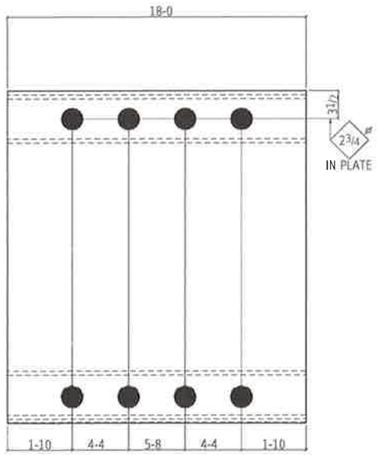

SEE NOTE 4

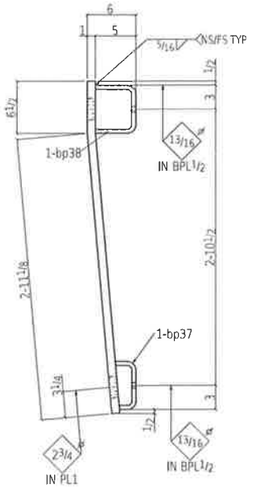

ONE TRANSITION PLATE 404H

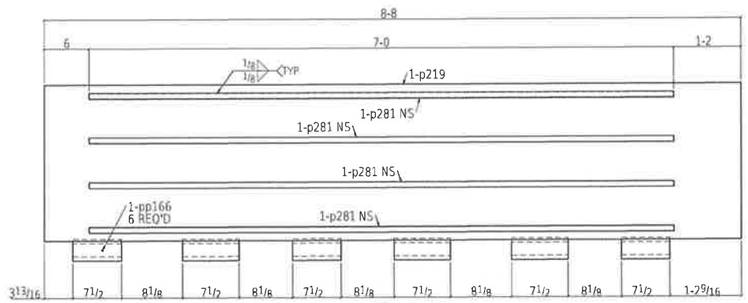

SEE NOTE 3

ONE TRANSITION PLATE 404E

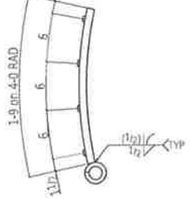

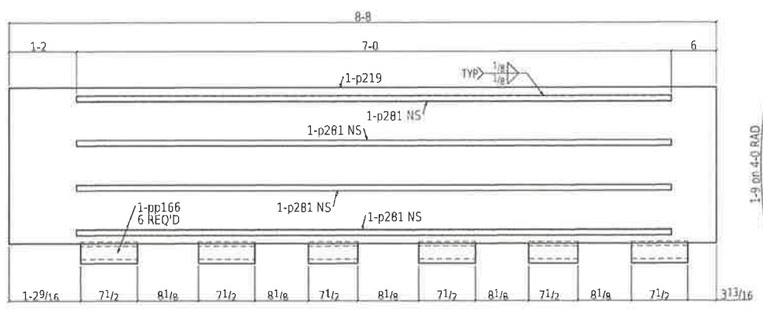

SEE NOTE 3

ONE TRANSITION PLATE 404G

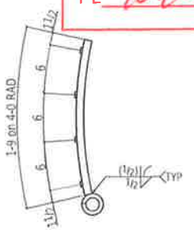

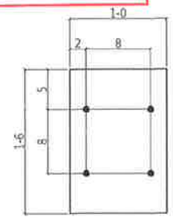

33 BACKING PLATES 404J

Record Drawings have been reviewed by the Project Engineer, and represent to the best of my knowledge, the project as constructed.

PE [illegible] Date 12/10/15

State of Alaska
Dept. of Transportation and Public Facilities
Marine Facilities Engineering

CONTRACTOR SUBMITTAL REVIEW

Checking is only for conformance with the design concepts of the Project and compliance with the information given in the Contract Documents. The Contractor is responsible for dimensions to be confirmed and correlated at the job site for information that pertains solely to the fabrication process or to techniques of construction for coordination of the work of all trades.

ACCEPTED ✓
ACCEPTED AS NOTED
RETURNED FOR CORRECTION
02/09/2015 Tim Doggett
Date Design Engineer

FOR FABRICATION
Dave Hankins 1-22-15

NOTES:
1. SEAL ALL WELDS.
2. SEE SHEET A1000 FOR FULL ASSEMBLY.
3. TOP OF TRANSITION PLATE SHALL BE COATED WITH WITH EPOXY NON-SKID PER SECTION 513- SYSTEM 7A.
4. TOP OF TRANSITION PLATE SHALL BE COATED WITH NON-SKID PER SECTION 513- SYSTEM 7B.

TOLERANCES:
(UNLESS OTHERWISE SPECIFIED)
3 PLACE DECIMALS +/- .01
2 PLACE DECIMALS +/- .03
FRACTIONS +/- 1/16
ANGLES +/- 2 DEGREES
MACHINE FINISHES 125 ✓U.N.

BILL OF MATERIAL

QTY Total	Piece Mark	QTY unit	Description	Length		Remarks	Weight Unit
6	404A		BEAM			HOT DIP GALVANIZE	203
6	404A	1	MC18x42.7	4	9	A709-36	203
			FIELD BOLTS				
6			7/8 Dia A325 DTH	0	3 3/4	+2HD WASH	
24	404B		HORIZONTAL BRACE			HOT DIP GALVANIZE	100
24	404B	1	L6x6x3/8	6	8 1/16	A709-36	100
			FIELD BOLTS				
96			1 Dia A325 DTH	0	3 1/2	+2HD WASH	
42	404C		VERTICAL BRACE			HOT DIP GALVANIZE	47
42	404C	1	L4x4x3/8	4	3 1/2	A709-36	47
			FIELD BOLTS				
168			7/8 Dia A325 DTH	0	2 1/2	+2HD WASH	
42	404D		VERTICAL BRACE			HOT DIP GALVANIZE	53
42	404D	1	L4x4x3/8	5	4 1/2	A709-36	53
			FIELD BOLTS				
168			7/8 Dia A325 DTH	0	2 1/2	+2HD WASH	
01	404E		TRANSITION PLATE			HOT DIP GALVANIZE	689
6	pp166	6	PIPE 2 1/2 XXSTG	0	7 1/2	A53B	9
1	p219	1	PL 1/2	8	8	ROLLED A709-50	620
4	p281	4	PL 1/4x3/4	7	0	A36	2
01	404G		TRANSITION PLATE			HOT DIP GALVANIZE	689
6	pp166	6	PIPE 2 1/2 XXSTG	0	7 1/2	A53B	9
1	p219	1	PL 1/2	8	8	ROLLED A709-50	620
4	p281	4	PL 1/4x3/4	7	0	A36	2
01	404H		TRANSITION PLATE			HOT DIP GALVANIZE	3256
1	404H	1	PL 1x15 5/16	16	0	PENT A36	2546
1	bp38	1	PL 1/2x216	1	2 5/16	PENT A36	439
1	bp37	1	PL 1/2x216	0	8 7/16	PENT A36	272
			FIELD BOLTS				
6			3/4 Dia A325 DTH	0	3 3/4	+3DTH WASH	
33	404J		BACKING PLATE			HOT DIP GALVANIZE	54
33	404J	1	PL 1/2x12	1	6	A36	54
			FIELD BOLTS				
132			3/4 Dia A325SC	0	3 1/2	+3HD WASH	

Total weight 14203

REV	DESCRIPTION	BY	CHK	DATE
0	FOR FABRICATION	RRP	KB	Jan 12 2015
A	FOR APPROVAL	RRP	KB	Oct 28 2014

DETAILING
JOB 2265
REF A1000

FABRICATION TECHNICAL SERVICES, INC.
307 N. LINCOLN STE. B, POST FALLS, ID 83854
(208) 457-8282 fax. (208) 457-8208
EMAIL: kevin@FTSsteeldetailing.com

HOLES DIA UNO 13/16
SURF PREP SEE B.O.M.
FINISH: SEE B.O.M.

WELD 3/16 FILLET U.N.O. (E70XX)
W.P. (TAILS)
COL BASE PLATES ARE ALWAYS SECTION CUTS LOOKING DOWN

JESSE ENGINEERING CO.
1840 Marine View Drive, Tacoma, Washington 98422 Ph. 253-922-7433

PROJECT
IFA HOLLIS/CLARK BAY
FERRY TERMINAL IMPROVEMENTS

CONTRACTOR
WESTERN MARINE CONSTRUCTION

DATE 09-24-14
JOB NO 203940

DESCRIPTION
130' TRANSFER BRIDGE

DWG NO 404

SHEET SIZE: 24X36
09:08:06 AM
Jan 12 2015

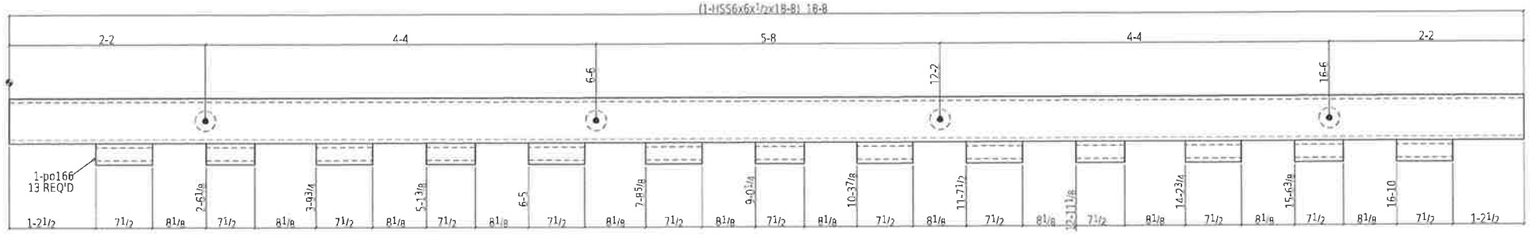

ONE BEAM 405A

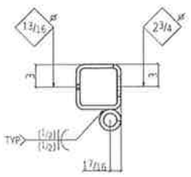

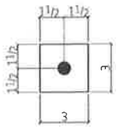

272 PLATE WASHERS 405C

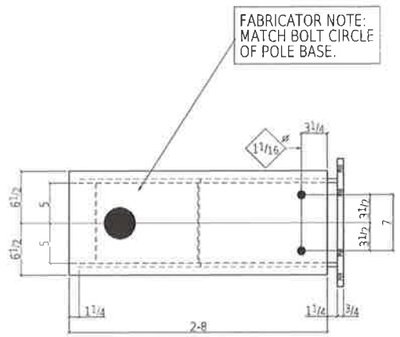

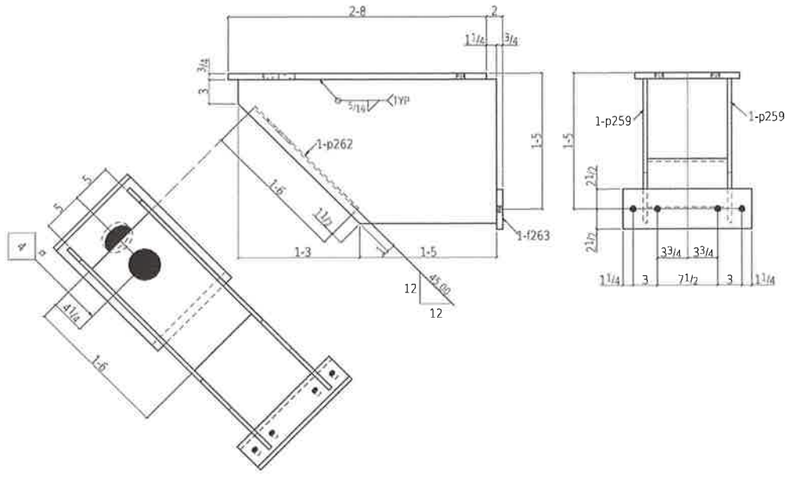

3 LIGHT SUPPORTS 405B

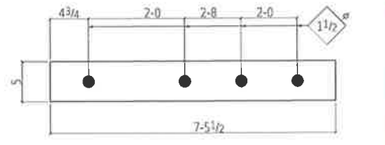

68 ELASTOMERIC PADS 405D

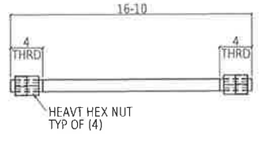

ONE HINGE PIN 405E

BILL OF MATERIAL

QTY total	Piece Mark	QTY unit	Description	Length	Remarks	Weight Unit
QTY	405A		HINGE		HOT DIP GALVANIZE	766
1	405A	1	HSS6x6x1/2	18 8	A500B	659
13	pp166	13	PIPE 2 1/2 XXSTG	0 7 1/2	A53B	9
			FIELD BOLTS			
6			3/4 Dia A325 DTI	0 3 1/4	+1DTI WASH	
3	405B		LIGHT SUPPORT		HOT DIP GALVANIZE	282
3	p108	1	PL 3/8 x13	2 8	A36	88
3	f267	1	FB 3/8 x5	1 4	A36	17
6	p259	2	PL 1/2 x18	2 8	A36	82
3	p262	1	PL 1/2 x10	1 6	A36	13
			FIELD BOLTS			
6			1 Dia A325N	0 3 3/4	+1HD WASH	
12			3/4 Dia A325N	0 2 1/2	+1HD WASH	
272	405C		PLATE WASHER		NO FINISH	1
272	405C	1	FB 3/16 x3	0 3	SS316L	1
			FIELD BOLTS			
272		1	1" NUT		HHNT SS316	
68	405D		ELASTOMERIC PAD		NO FINISH	342
68	405D	1	1 1/2 x5	7 5 1/2	3 KSI	342
QTY	405E		HINGE PIN		HOT DIP GALVANIZE	101
1	405E	1	2 3/4 1/2	16 10	A36	101
1		4	1 1/2 NUT		HHNT A563	

Total Weight 25200

REV	DESCRIPTION	BY	CHK	DATE
0	FOR FABRICATION	BRP	KR	Jan 12 2015
A	FOR APPROVAL	BRP	KR	Oct 28 2014

State of Alaska
Dept. of Transportation and Public Facilities
Marine Facilities Engineering

CONTRACTOR SUBMITTAL REVIEW

Checking is only for conformance with the design concepts of the Project and compliance with the information given in the Contract Documents. The Contractor is responsible for dimensions to be confirmed and correlated at the job site for information that pertains solely to the fabrication process or to techniques of construction for coordination of the work of all trades.

ACCEPTED ✔
ACCEPTED AS NOTED
RETURNED FOR CORRECTION
02/09/2015 Tim Doggett
Date Design Engineer

FOR FABRICATION
Dave Hankins 1-22-15

DETAILING
JOB 2265
REF A1000

FABRICATION TECHNICAL SERVICES, INC.
307 N. LINCOLN STE. B POST FALLS ID 83854
(208) 457-8282 fax (208) 457-8208
EMAIL kevin@FTSsteeldetailing.com

HOLES DIA UNO 13/16
SURF PREP SEE B.O.M.
FINISH: SEE B.O.M.

WELD 3/16 FILLET U.N.O. (E70XX)
W.P. (TAILS)
COL BASE PLATES ARE ALWAYS SECTION CUTS LOOKING DOWN

NOTES:
1. SEAL ALL WELDS.

TOLERANCES:
(UNLESS OTHERWISE SPECIFIED)
3 PLACE DECIMALS +/- .01
2 PLACE DECIMALS +/- .03
FRACTIONS +/- 1/16
ANGLES +/- 2 DEGREES
MACHINE FINISHES 125 U.N.

JESSE ENGINEERING CO.
1840 Marine View Drive, Tacoma, Washington 98422 Ph. 253-922-7433

PROJECT
IFA HOLLIS/CLARK BAY
FERRY TERMINAL IMPROVEMENTS

CONTRACTOR
WESTERN MARINE CONSTRUCTION

DESCRIPTION
130' TRANSFER BRIDGE

DATE 09-24-14
JOB NO 203940
DRAWING 405

Record Drawings have been reviewed by the Project Engineer, and represent to the best of my knowledge, the project as constructed.
PE [signature] Date 12/10/15

SHEET SIZE: 24X36
12:08:12 PM
Jan 21 2015

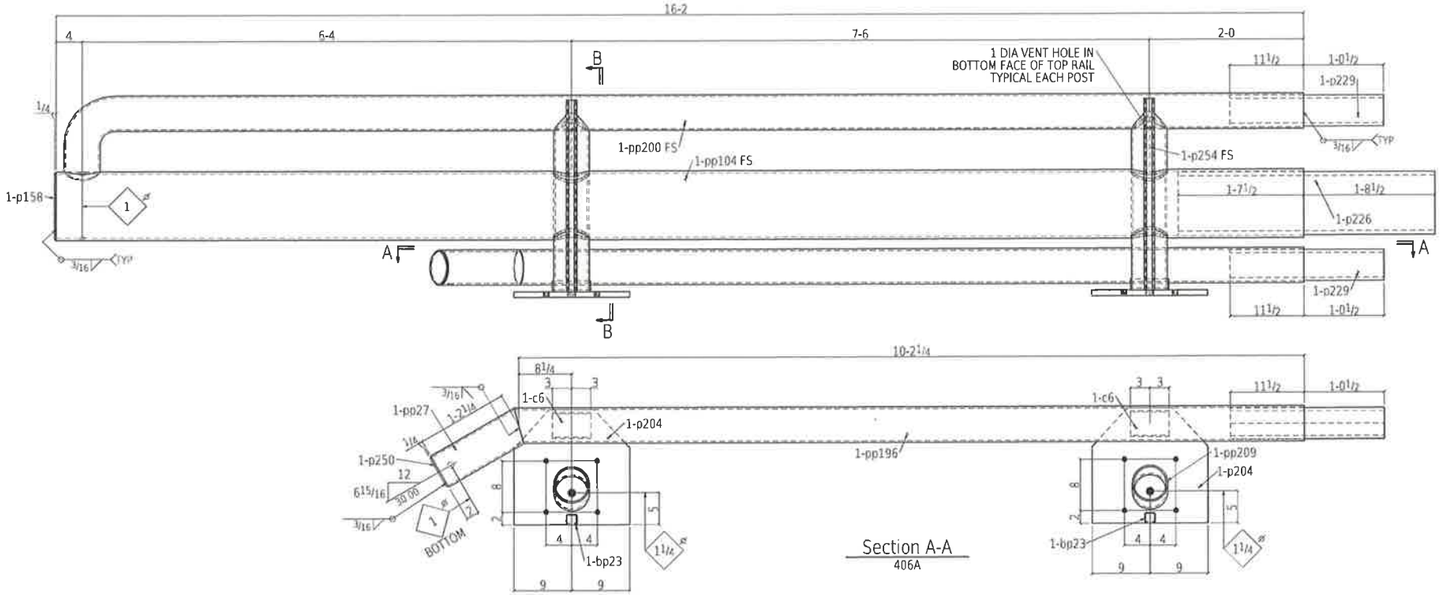

Section A-A
406A

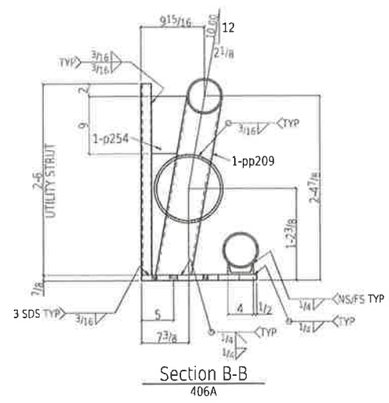

Section B-B
406A

ONE RAIL 406A

Record Drawings have been reviewed by the Project Engineer, and represent to the best of my knowledge, the project as constructed.

PE _____ Date 12/10/15

FOR FABRICATION

Dave Hankins 1-22-15

BILL OF MATERIAL

QTY total	Piece Mark	QTY unit	Description	Length		Remarks	Weight Unit
ONE 406A			RAIL			HOT DIP GALVANIZE	1684
1	pp104	1	PIPE 10 STD	16	2	A53B	654
1	pp200	1	PIPE 5 STD	15	10 1/4	A53B	737
1	pp196	1	PIPE 5 STD	18	3	A53B	150
2	pp209	2	PIPE 5 STD	2	4 7/16	A53B	35
1	pp27	1	PIPE 5 STD	1	3	A53B	18
2	c6	2	C4x7.25	0	6	A36	4
2	p204	2	PL 7/8x18	1	6	A36	80
1	p226	1	PL 5/8x31	3	4	ROLLED A36	220
2	p229	2	PL 1/2x15 5/16	2	0	ROLLED A36	52
2	p254	2	PL 1/4x5 1/2	0	9	A36	4
1	p158	1	RPL 1/4x10 1/2			A36	6
1	p250	1	RPL 1/4x5 1/2			A36	1
2	bp23	2	15/16 UNISTRUT	2	6	A36	27

BILL OF MATERIAL

QTY total	Piece Mark	QTY unit	Description	Length	Remarks	Weight Unit

Total weight: 1684

NOTES:
1. SEAL ALL WELDS.

TOLERANCES:
(UNLESS OTHERWISE SPECIFIED)
3 PLACE DECIMALS +/- .01
2 PLACE DECIMALS +/- .03
FRACTIONS +/- 1/16
ANGLES +/- 2 DEGREES
MACHINE FINISHES 125 U.N.

REV	DESCRIPTION	BY	CHK	DATE
B	FOR FABRICATION	RRP	KR	Jan 12 2015
A	FOR APPROVAL	RRP	KR	Oct 28 2014

State of Alaska
Dept. of Transportation and Public Facilities
Marine Facilities Engineering

CONTRACTOR SUBMITTAL REVIEW

Checking is only for conformance with the design concepts of the Project and compliance with the information given in the Contract Documents. The Contractor is responsible for dimensions to be confirmed and correlated at the job site for information that pertains solely to the fabrication process or to techniques of construction for coordination of the work of all trades.

ACCEPTED ✓
ACCEPTED AS NOTED
RETURNED FOR CORRECTION
02/09/2015 Tim Doggett
Date Design Engineer

SHEET SIZE 24X36
10:43:26 AM
Jan 21 2015

DETAILING
JOB: 2265
REF: A1000

FABRICATION TECHNICAL SERVICES, INC.
307 N. LINCOLN STE. B POST FALLS, ID 83854
(208) 457-8282 fax (208) 457-8208
EMAIL kevin@FTSsteeldetailing.com

HOLES DIA UNO: 13/16
SURF PREP: SEE B.O.M.
FINISH: SEE B.O.M.

WELD 3/16 FILLET U.N.O. (E70XX)
W.P. (TAILS)
COL BASE PLATES ARE ALWAYS SECTION CUTS LOOKING DOWN

JESSE ENGINEERING CO.
1840 Marine View Drive, Tacoma, Washington 98422 Ph. 253-922-7433

PROJECT
IFA HOLLIS/CLARK BAY FERRY TERMINAL IMPROVEMENTS

CONTRACTOR
WESTERN MARINE CONSTRUCTION

DATE 10-27-14

JOB NO 203940

DESCRIPTION
130' TRANSFER BRIDGE

DWG NO 406

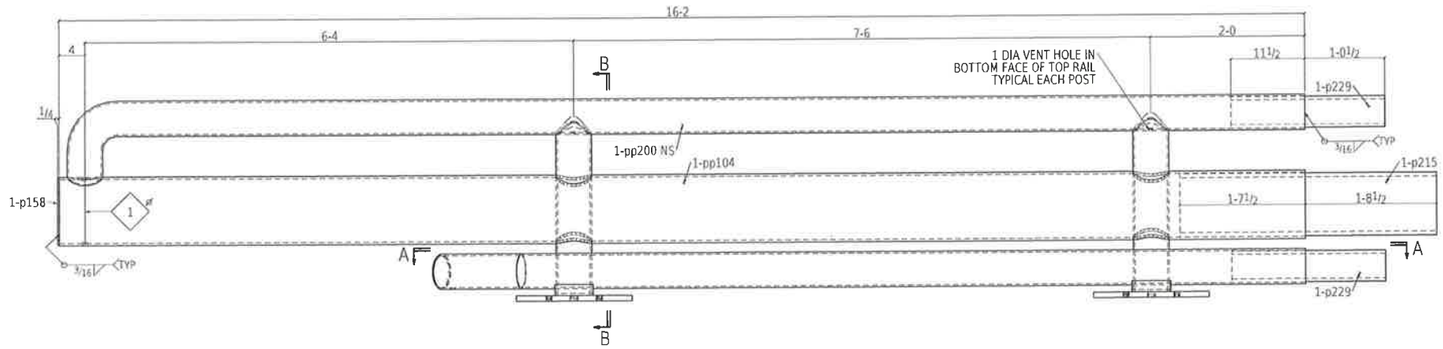

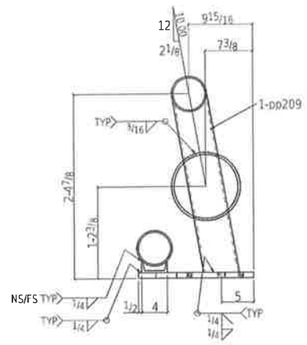

Section B-B
407A

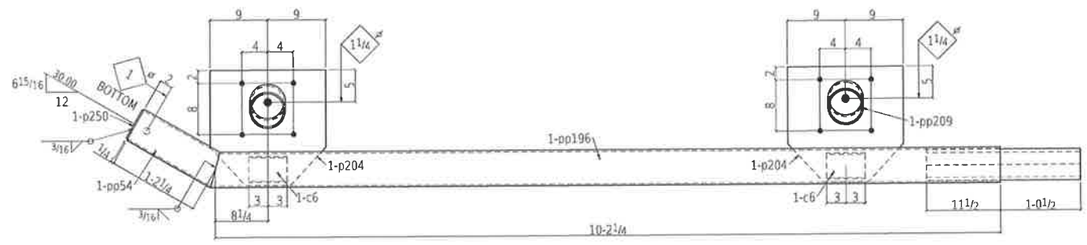

Section A-A
407A

ONE RAIL 407A

Record Drawings have been reviewed by the Project Engineer, and represent to the best of my knowledge, the project as constructed.

PE [signature] Date 12/10/15

FOR FABRICATION
Dave Hankins 1-22-15

BILL OF MATERIAL

QTY total	Piece Mark	QTY unit	Description	Length		Remarks	Weight Unit
ONE	407A		PAIL			HOT DIP GALVANIZE	1623
1	pp104	1	PIPE 10 STD	16	2	A53B	654
1	pp200	1	PIPE 5 STD	15	10 1/4	A53B	232
1	pp196	1	PIPE 5 STD	10	3	A53B	150
2	pp209	2	PIPE 5 STD	2	4 7/16	A53B	35
1	pp54	1	PIPE 5 STD	1	3	A53B	18
2	c6	2	C4x7.25	0	6	A36	4
2	p204	2	PL 7/8x18	1	6	A36	80
1	p215	1	PL 5/16x31	3	4	ROLLED A36	220
2	p229	2	PL 1/2x15 5/16	2	0	ROLLED A36	52
1	p158	1	RPL 1/4x101/2			A36	6
1	p250	1	RPL 1/4x5 1/8			A36	1

BILL OF MATERIAL

QTY total	Piece Mark	QTY unit	Description	Length	Remarks	Weight Unit

Total weight : 1623

NOTES:
1. SEAL ALL WELDS.

TOLERANCES:
(UNLESS OTHERWISE SPECIFIED)
3 PLACE DECIMALS +/- .01
2 PLACE DECIMALS +/- .03
FRACTIONS +/- 1/16
ANGLES +/- 2 DEGREES
MACHINE FINISHES 125 √U.N.

REV	DESCRIPTION	BY	CHK	DATE
0	FOR FABRICATION	RRP	KR	Jan 12 2015
A	FOR APPROVAL	RRP	KR	Oct 28 2014

State of Alaska
Dept. of Transportation and Public Facilities
Marine Facilities Engineering

CONTRACTOR SUBMITTAL REVIEW

Checking is only for conformance with the design concepts of the Project and compliance with the information given in the Contract Documents. The Contractor is responsible for dimensions to be confirmed and correlated at the job site for information that pertains solely to the fabrication process or to techniques of construction for coordination of the work of all trades.

ACCEPTED ✔
ACCEPTED AS NOTED
RETURNED FOR CORRECTION
02/09/2015 Tim Doggett
Date Design Engineer

SHEET SIZE 24X36
09:08:07 AM
Jan 12 2015

DETAILING
JOB: 2265
REF: A1000

FABRICATION TECHNICAL SERVICES, INC.
307 N. LINCOLN STE. B POST FALLS, ID 83854
(208) 457-8282 fax: (208) 457-8208
EMAIL: kevin@FTSsteeldetailing.com

HOLES DIA UNO 13/16
SURF PREP: SEE B.O.M.
FINISH: SEE B.O.M.

WELD 3/16 FILLET U.N.O. (E70XX)
W.P. (TAILS)
COL BASE PLATES ARE ALWAYS SECTION CUTS LOOKING DOWN

JESSE ENGINEERING CO.
1840 Marine View Drive, Tacoma, Washington 98422 Ph: 253-922-7433

PROJECT: IFA HOLLIS/CLARK BAY FERRY TERMINAL IMPROVEMENTS
CONTRACTOR: WESTERN MARINE CONSTRUCTION
DESCRIPTION: 130' TRANSFER BRIDGE
DATE: 10-27-14
JOB NO: 203940
DWG NO: 407

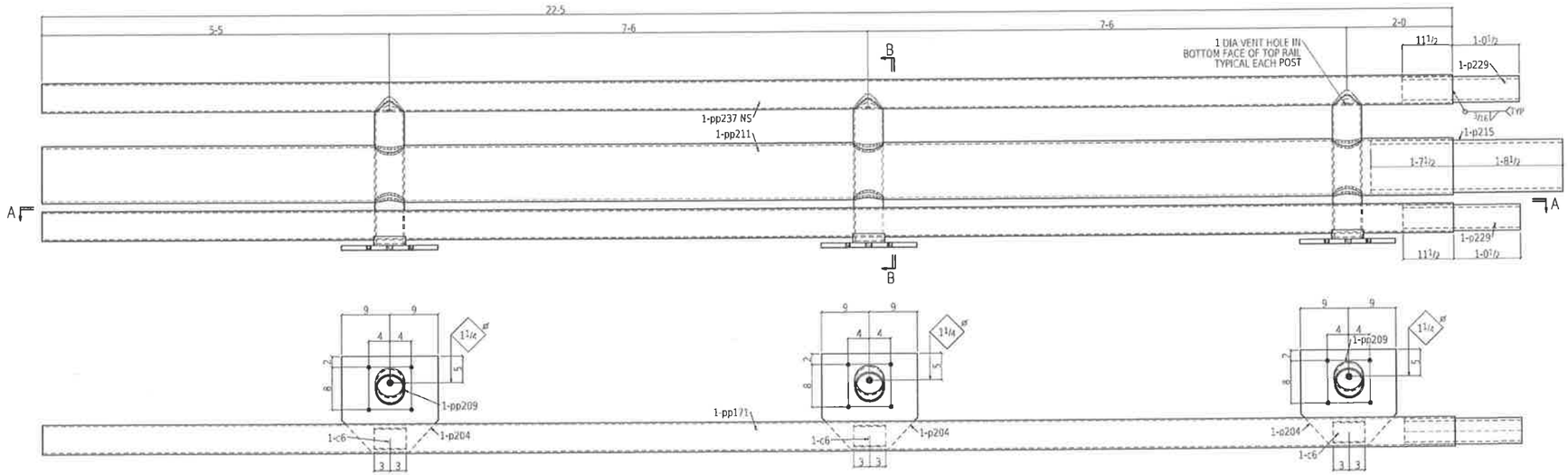

Section A-A
408A

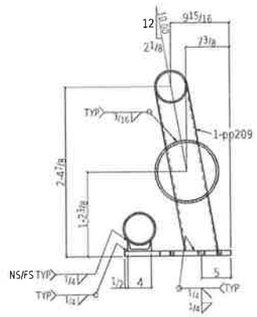

Section B-B
408A

4 RAILS 408A

Record Drawings have been reviewed by the Project Engineer, and represent to the best of my knowledge, the project as constructed.

PE [signature] Date 12/10/15

FOR FABRICATION
Dave Hankins 1-22-15

BILL OF MATERIAL

QTY total	Piece Mark	QTY unit	Description	Length		Remarks	Weight Unit
4	408A		RAIL			HOT DIP GALVANIZE	2243
4	pp211	1	PIPE 10 STD	22	5	A53B	907
4	pp171	1	PIPE 5 STD	22	5	A53B	328
4	pp237	1	PIPE 5 STD	22	5	A53B	328
12	pp209	3	PIPE 5 STD	2	4 3/16	A53B	35
12	c6	3	C4x7.25	0	6	A36	4
12	p204	3	PL 7/16x18	1	6	A36	80
4	p215	1	PL 5/16x31	3	4	ROLLED A36	220
8	p229	2	PL 12 7/16x5 5/16	2	0	ROLLED A36	52

BILL OF MATERIAL

QTY total	Piece Mark	QTY unit	Description	Length	Remarks	Weight Unit

Total weight: 8972

NOTES:
1. SEAL ALL WELDS.

TOLERANCES:

(UNLESS OTHERWISE SPECIFIED)
3 PLACE DECIMALS +/- .01
2 PLACE DECIMALS +/- .03
FRACTIONS +/- 1/16
ANGLES +/- 2 DEGREES
MACHINE FINISHES 125 √ U.N.

REV	DESCRIPTION	BY	CHK	DATE
0	FOR FABRICATION	RRP	KR	Jan 12 2015
A	FOR APPROVAL	RRP	KR	Oct 28 2014

State of Alaska
Dept. of Transportation and Public Facilities
Marine Facilities Engineering

CONTRACTOR SUBMITTAL REVIEW

Checking is only for conformance with the design concepts of the Project and compliance with the information given in the Contract Documents. The Contractor is responsible for dimensions to be confirmed and correlated at the job site for information that pertains solely to the fabrication process or to techniques of construction for coordination of the work of all trades.

ACCEPTED ✔
ACCEPTED AS NOTED
RETURNED FOR CORRECTION
02/09/2015 Tim Doggett
Date Design Engineer

DETAILING: FABRICATION TECHNICAL SERVICES, INC.
JOB: 2265 307 N. LINCOLN STE. B, POST FALLS, ID 83854
REF: A1000 (208) 457-8282 fax (208) 457-8208
EMAIL kevin@FTSsteeldetailing.com

HOLES DIA UNO 13/16 WELD 3/16 FILLET U.N.O. (E70XX)
SURF PREP SEE B.O.M. W.P. (TAILS)
FINISH: SEE B.O.M. COL BASE PLATES ARE ALWAYS SECTION CUTS LOOKING DOWN

JESSE ENGINEERING CO.
1840 Marine View Drive, Tacoma, Washington 98422 Ph. 253-922-7433

PROJECT: IFA HOLLIS/CLARK BAY FERRY TERMINAL IMPROVEMENTS
CONTRACTOR: WESTERN MARINE CONSTRUCTION
DATE: 10-27-14
JOB NO: 203940
DESCRIPTION: 130' TRANSFER BRIDGE
DWG NO: 408

SHEET SIZE: 24X36
09:08:07 AM
Jan 12 2015

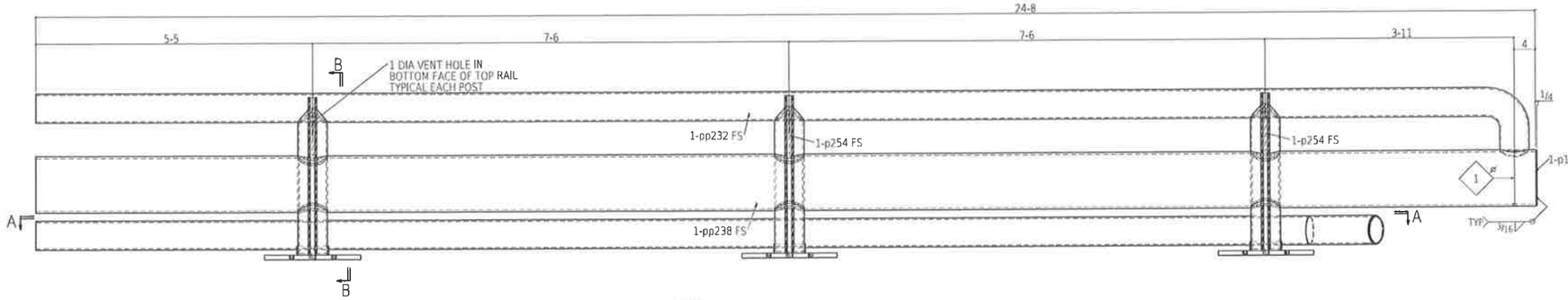

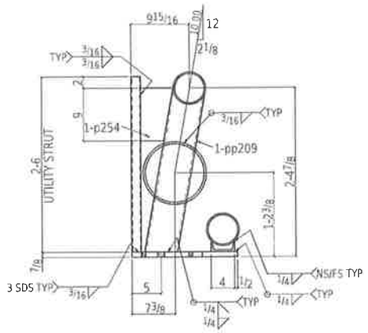

Section B-B
409A

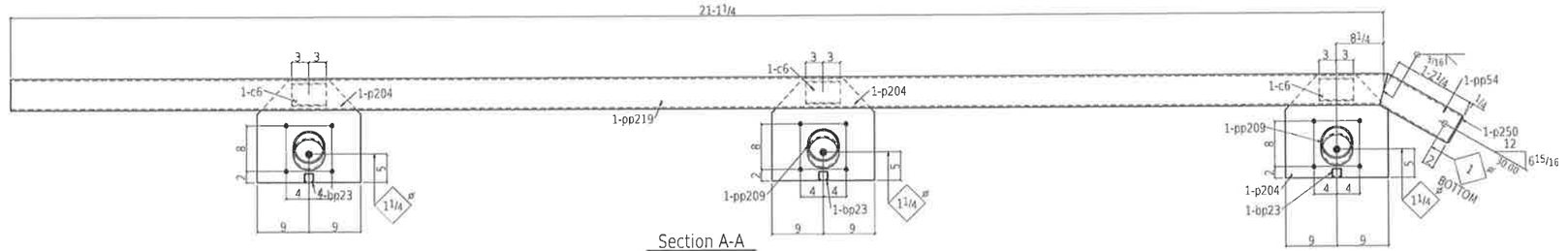

Section A-A
409A

ONE RAIL 409A

Record Drawings have been reviewed by the Project Engineer, and represent to the best of my knowledge, the project as constructed.

PE [signature] Date 12/10/15

FOR FABRICATION
Dave Hawkins 1-22-15

BILL OF MATERIAL

QTY Total	Piece Mark	QTY Unit	Description	Length		Remarks	Weight Unit
ONE	409A		RAIL			HOT DIP GALVANIZE	2136
1	pp238	1	PIPE 10 STD	24	8	A538	989
1	pp232	1	PIPE 5 STD	24	3 11/16	A538	355
1	pp219	1	PIPE 5 STD	21	2	A538	309
3	pp209	3	PIPE 5 STD	2	4 3/16	A538	35
1	pp54	1	PIPE 5 STD	1	3	A538	18
3	c6	3	C4x7.25	0	6	A36	4
3	p204	3	PL 1/2x18	1	6	A36	60
2	p254	3	PL 1/2x5 1/2	0	9	A36	4
1	p158	1	PL 1/4x10 1/2			A36	6
1	p250	1	PL 1/4x5 1/8			A36	1
3	bp23	3	1 1/4in LUNGSTRUT	2	6	A36	27

Total weight: 2136

BILL OF MATERIAL

QTY Total	Piece Mark	QTY Unit	Description	Length	Remarks	Weight Unit

NOTES:
1. SEAL ALL WELDS.

TOLERANCES:
(UNLESS OTHERWISE SPECIFIED)
3 PLACE DECIMALS +/- .01
2 PLACE DECIMALS +/- .03
FRACTIONS +/- 1/16
ANGLES +/- 2 DEGREES
MACHINE FINISHES 125 √U.N.

REV	DESCRIPTION	BY	CHK	DATE
0	FOR FABRICATION	RRP	KB	Jan 12 2015
A	FOR APPROVAL	RRP	KB	Oct 28 2014

State of Alaska
Dept. of Transportation and Public Facilities
Marine Facilities Engineering

CONTRACTOR SUBMITTAL REVIEW

Checking is only for conformance with the design concepts of the Project and compliance with the information given in the Contract Documents. The Contractor is responsible for dimensions to be confirmed and correlated at the job site for information that pertains solely to the fabrication process or to techniques of construction for coordination of the work of all trades.

ACCEPTED ✓
ACCEPTED AS NOTED
RETURNED FOR CORRECTION
02/09/2015 Tim Doggett
Date Design Engineer

DETAILING
JOB 2265
REF A1000

FABRICATION TECHNICAL SERVICES, INC.
307 N. LINCOLN STE. B, POST FALLS, ID 83854
(208) 457-8282 fax: (208) 457-8208
EMAIL kevin@FTSsteeldetailing.com

HOLES DIA UNO. 13/16
SURF PREP. SEE B.O.M.
FINISH. SEE B.O.M.

WELD 3/16 FILLET U.N.O. (E70XX)
W.P. (TAILS)
COL BASE PLATES ARE ALWAYS SECTION CUTS LOOKING DOWN

JESSE ENGINEERING CO.
1840 Marine View Drive, Tacoma, Washington 98422 Ph 253-922-7433

PROJECT: IFA HOLLIS/CLARK BAY FERRY TERMINAL IMPROVEMENTS
CONTRACTOR: WESTERN MARINE CONSTRUCTION
DATE: 10-27-14
JOB NO: 203940
DESCRIPTION: 130' TRANSFER BRIDGE
DRAWING: 409

SHEET SIZE: 24X36
10:50:30 AM
Jan 21 2015

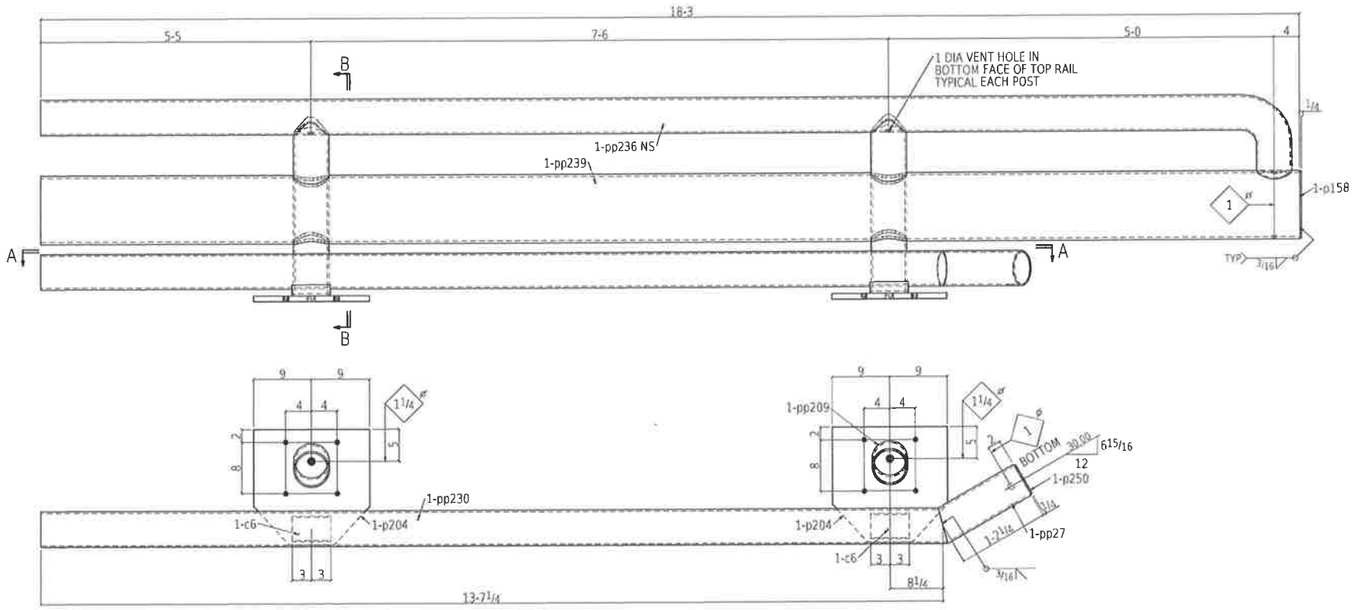

Section A-A
410A

ONE RAIL 410A

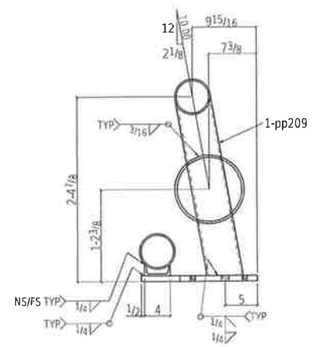

Section B-B
410A

Record Drawings have been reviewed by the Project Engineer, and represent to the best of my knowledge, the project as constructed.

PE [signature] Date 12/10/15

FOR FABRICATION
Dave Hankins 1-22-15

State of Alaska
Dept. of Transportation and Public Facilities
Marine Facilities Engineering

CONTRACTOR SUBMITTAL REVIEW

Checking is only for conformance with the design concepts of the Project and compliance with the information given in the Contract Documents. The Contractor is responsible for dimensions to be confirmed and correlated at the job site for information that pertains solely to the fabrication process or to techniques of construction for coordination of the work of all trades

ACCEPTED ✓
ACCEPTED AS NOTED
RETURNED FOR CORRECTION
02/09/2015 Tim Doggett
Date Design Engineer

TOLERANCES:
(UNLESS OTHERWISE SPECIFIED)
3 PLACE DECIMALS +/- .01
2 PLACE DECIMALS +/- .03
FRACTIONS +/- 1/16
ANGLES +/- 2 DEGREES
MACHINE FINISHES 125 √ U.N.

NOTES:
1. SEAL ALL WELDS.

REV	DESCRIPTION	BY	CHK	DATE
0	FOR FABRICATION	RRP	KR	Jan 12 2015
A	FOR APPROVAL	RRP	KR	Oct 28 2014

BILL OF MATERIAL

QTY Total	Piece Mark	QTY unit	Description	Length	Remarks	Weight Unit
ONE	410A		RAIL		HOT DIP GALVANIZE	1464
1	pp239	1	PIPE 10 STD	18 3	A538	739
1	pp236	1	PIPE 5 STD	12 11 5/16	A538	267
1	pp238	1	PIPE 5 STD	12 8	A538	200
2	pp209	2	PIPE 5 STD	2 4 7/16	A538	35
1	pp27	1	PIPE 5 STD	1 3	A538	18
2	c6	2	C4x7.25	0 6	A36	4
2	p204	2	PL 7/8x18	1 6	A36	60
1	p158	1	PL 1/4x10 1/2		A36	6
1	p250	1	PL 1/4x5 1/8		A36	1

BILL OF MATERIAL

QTY Total	Piece Mark	QTY unit	Description	Length	Remarks	Weight Unit

Total weight 1464

DETAILING
JOB: 2265
REF: A1000

FABRICATION TECHNICAL SERVICES, INC.
307 N. LINCOLN STE. B, POST FALLS, ID 83854
(208) 457-8282 fax: (208) 457-8208
EMAIL: kevin@FTSsteeldetailing.com

HOLES DIA UNO: 13/16
SURF PREP: SEE B.O.M.
FINISH: SEE B.O.M.

WELD 3/16 FILLET U.N.O. (E70XX)
W.P. (TAILS)
COL BASE PLATES ARE ALWAYS SECTION CUTS LOOKING DOWN

JESSE ENGINEERING CO.
1840 Marine View Drive, Tacoma, Washington 98422 Ph: 253-922-7433

PROJECT: IFA HOLLIS/CLARK BAY FERRY TERMINAL IMPROVEMENTS
CONTRACTOR: WESTERN MARINE CONSTRUCTION
DATE: 10-27-14
JOB NO: 203940
DESCRIPTION: 130' TRANSFER BRIDGE
DRAWING NO: 410

SHEET SIZE: 24X36
09:08:07 AM
Jan 12 2015

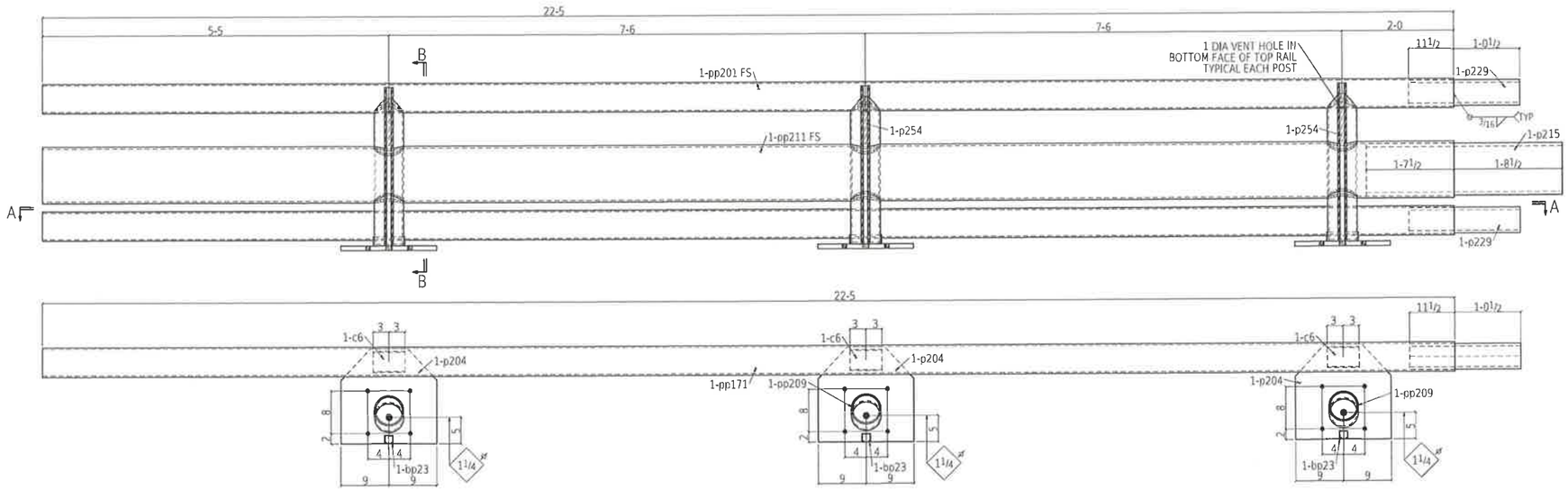

Section A-A
411A

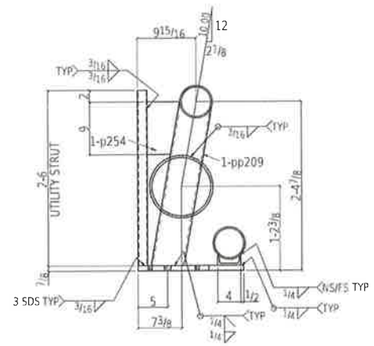

Section B-B
411A

4 RAILS 411A

Record Drawings have been reviewed by the Project Engineer, and represent to the best of my knowledge, the project as constructed.

PE _____ Date 12/10/15

FOR FABRICATION
Dave Hankins 1-22-15

BILL OF MATERIAL

QTY total	Piece Mark	QTY unit	Description	Length		Remarks	Weight Unit
4	411A		RAIL			HOT DIP GALVANIZE	2334
4	pp211	1	PIPE 10 STD	22	5	A53B	907
4	pp171	1	PIPE 5 STD	22	5	A53B	326
4	pp201	1	PIPE 5 STD	22	5	A53B	326
12	pp209	1	PIPE 5 STD	2	4 1/16	A53B	55
12	c6	1	C4x7.25	0	6	A36	4
12	pp204	1	PL7/16x18	1	6	A36	80
4	pp215	1	PL5/16x31	3	4	ROLLED A36	220
8	pp229	2	PL1/2x15 5/16	2	0	ROLLED A36	52
12	pp254	1	PL1/2x5 1/2	0	9	A36	4
12	bp23	1	1 5/8 CHISTRUT	2	6	A36	27

BILL OF MATERIAL

QTY total	Piece Mark	QTY unit	Description	Length		Remarks	Weight Unit

Total weight: 9335

DETAILING
JOB 2265
REF A1000

FABRICATION TECHNICAL SERVICES, INC.
307 N. LINCOLN STE. B, POST FALLS, ID 83854
(208) 457-8282 fax: (208) 457-8208
EMAIL: kevin@FTSsteeldetailing.com

HOLES DIA UNO 13/16
SURF PREP SEE B.O.M.
FINISH: SEE B.O.M.

WELD 3/16 FILLET U.N.O. (E70XX)
W.P. (TAILS)
COL BASE PLATES ARE ALWAYS SECTION CUTS LOOKING DOWN

JESSE ENGINEERING CO.
1840 Marine View Drive, Tacoma, Washington 98422 Ph. 253-922-7433

PROJECT
IFA HOLLIS/CLARK BAY
FERRY TERMINAL IMPROVEMENTS

CONTRACTOR
WESTERN MARINE CONSTRUCTION

DATE 10-27-14

JOB NO. 203940

DESCRIPTION
130' TRANSFER BRIDGE

DRAWING 411

State of Alaska
Dept. of Transportation and Public Facilities
Marine Facilities Engineering

CONTRACTOR SUBMITTAL REVIEW

Checking is only for conformance with the design concepts of the Project and compliance with the information given in the Contract Documents. The Contractor is responsible for dimensions to be confirmed and correlated at the job site for information that pertains solely to the fabrication process or to techniques of construction for coordination of the work of all trades.

ACCEPTED ✔
ACCEPTED AS NOTED
RETURNED FOR CORRECTION

02/09/2015 Tim Doggett
Date Design Engineer

TOLERANCES:
(UNLESS OTHERWISE SPECIFIED)
3 PLACE DECIMALS +/- .01
2 PLACE DECIMALS +/- .03
FRACTIONS +/- 1/16
ANGLES +/- 2 DEGREES
MACHINE FINISHES 125 √U.N.

NOTES:
1. SEAL ALL WELDS.

REV	DESCRIPTION	BY	CHK	DATE
B	FOR FABRICATION	RRP	KS	Jan 12 2015
A	FOR APPROVAL	RRP	KS	Oct 28 2014

SHEET SIZE 24X36
10:53:09 AM
Jan 21 2015

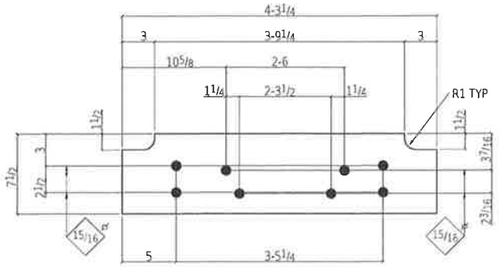

42 PL 1/2x7 1/2x4-3 1/4 p16

GRADE A36

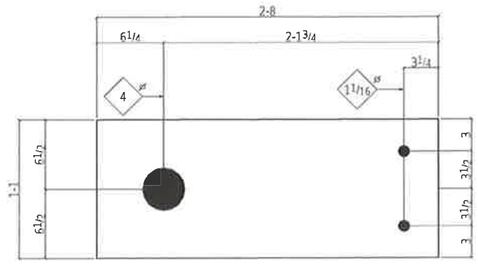

3 PL 3/4x13x2-8 p108

GRADE A36

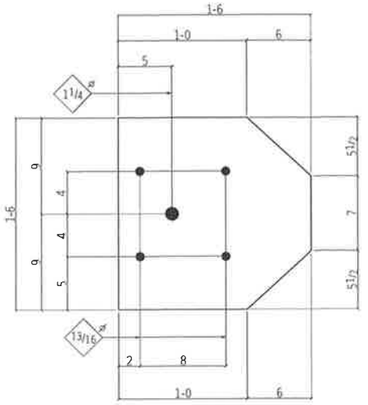

33 PL 7/8x18x1-6 p204

GRADE: A36

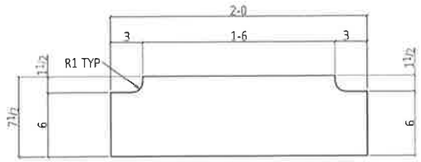

2 PL 3/4x7 1/2x2-0 p211

GRADE A36

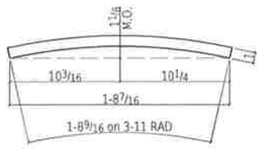

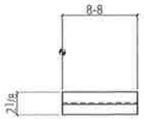

2 PL1x21x8-8 p219

GRADE: A709-50

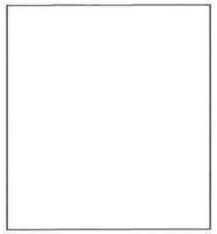

Unfolded Surface Template A

p219

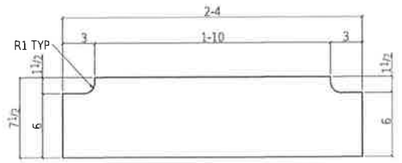

2 PL 3/4x7 1/2x2-4 p227

GRADE A36

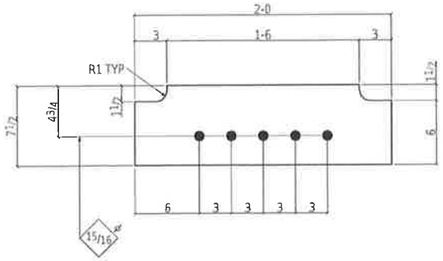

6 PL 3/4x7 1/2x2-0 p225

GRADE A36

Record Drawings have been reviewed by the Project Engineer, and represent to the best of my knowledge, the project as constructed.

PE _____ Date 12/10/15

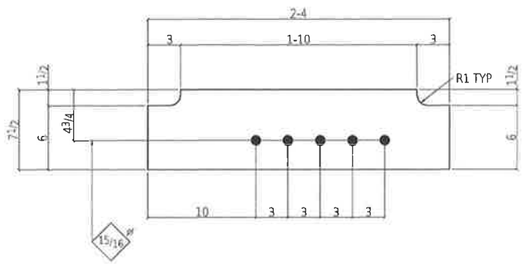

6 PL 3/4x7 1/2x2-4 p233

GRADE: A36

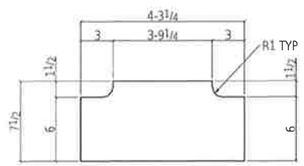

8 PL 1/2x7 1/2x4-3 1/4 p251

GRADE: A36

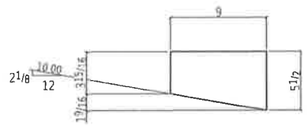

17 PL 1/4x5 1/2x0-9 p254

GRADE: A36

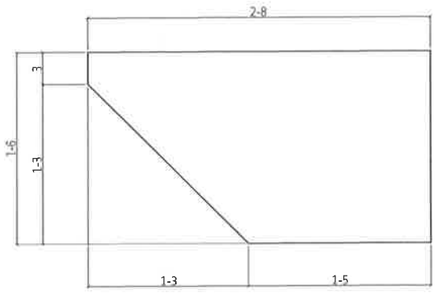

6 PL 1/2x18x2-8 p259

GRADE: A36

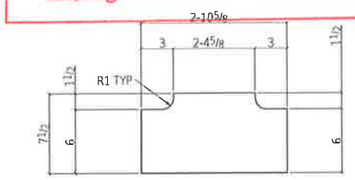

ONE PL 1/2x7 1/2x2-10 5/8 p264

GRADE: A36

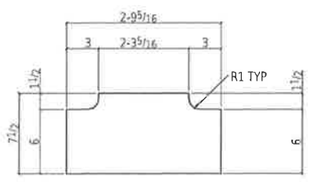

ONE PL 1/2x7 1/2x2-9 5/16 p265

GRADE: A36

FOR FABRICATION

Dave Hankins 1-22-15

TOLERANCES:

(UNLESS OTHERWISE SPECIFIED)
3 PLACE DECIMALS +/- .01
2 PLACE DECIMALS +/- .03
FRACTIONS +/- 1/16
ANGLES +/- 2 DEGREES
MACHINE FINISHES 125 √ U.N.

REV	DESCRIPTION	BY	CHK	DATE
0	FOR FABRICATION	RRP	KB	Jan 12 2015

NOTES
1. ERECT ALL MEMBER WITH THE MARKED END IN THE SAME RELATIVE POSITION AS SHOWN ON THE ERECTION DRAWING.
2. B.O.S.=BOTTOM OF STEEL ELEVATIONS REFERENCED (xxx-x x/x) ARE TOP OF STEEL
3. PLEASE PROVIDE INFORMATION AND VERIFICATIONS INDICATED IN CLOUDED AREAS CLOUDED NOTES WITH NO REMARKS FROM THE APPROVAL AUTHORITY WILL BE CONSIDERED AS AN AFFIRMATION.

DETAILING: FABRICATION TECHNICAL SERVICES, INC.
www.FTSsteeldetailing.com
CONTACT: Kevin@FTSsteeldetailing.com
ph: (208) 457-8282

JESSE ENGINEERING CO.
1840 Marine View Drive, Tacoma, Washington 98422 Ph: 253-922-7433

REF: SHEET 400 THRU 411

PROJECT: IFA HOLLIS/CLARK BAY FERRY TERMINAL IMPROVEMENTS
CONTRACTOR: WESTERN MARINE CONSTRUCTION
DESCRIPTION: TRANSFER BRIDGE PARTS
DATE: 01-12-15
J.O. / PROJECT NO.: 203933
DWG NO.: G400

JOB NO ####
SHEET SIZE 24X36
09:08:08 AM
Jan 12 2015

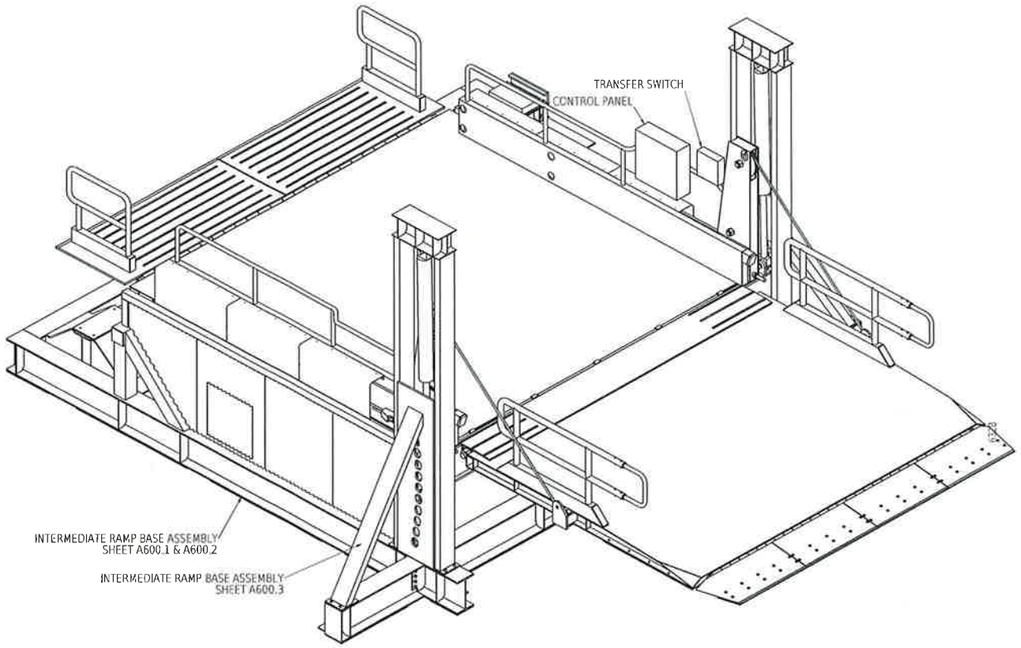

ISOMETRIC LOOKING NE
ACCESS DOOR SIDE

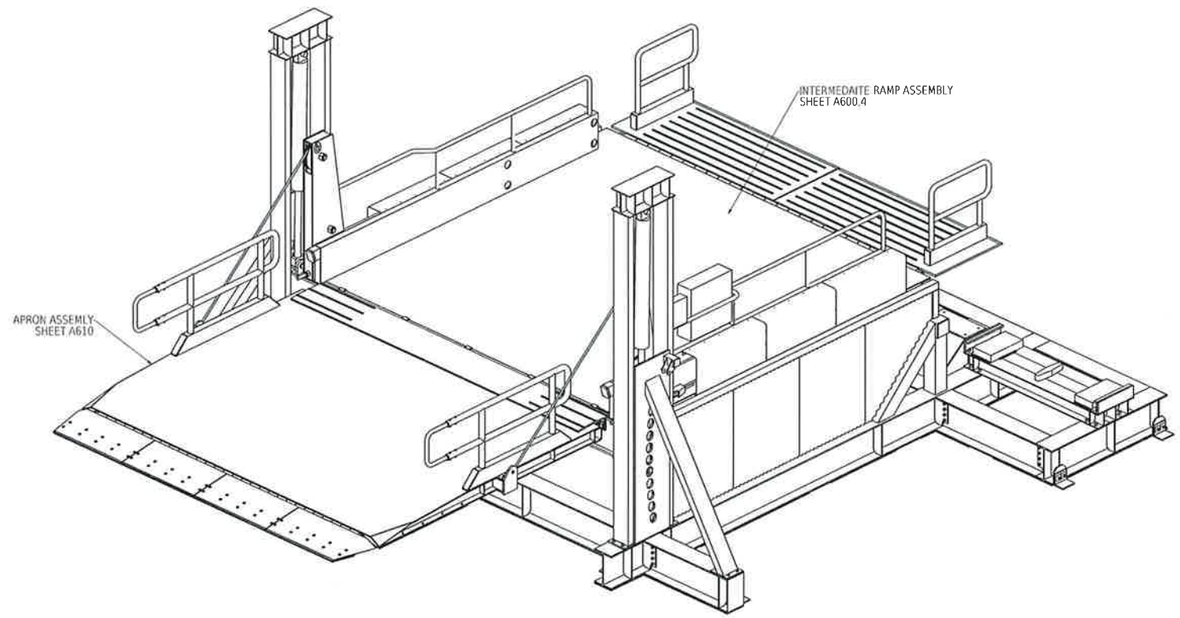

ISOMETRIC LOOKING NW
PED BRIDGE SUPPORT SIDE

State of Alaska
Dept. of Transportation and Public Facilities
Marine Facilities Engineering

CONTRACTOR SUBMITTAL REVIEW

Checking is only for conformance with the design concepts of the Project and compliance with the information given in the Contract Documents. The Contractor is responsible for dimensions to be confirmed and correlated at the job site for information that pertains solely to the fabrication process or to techniques of construction for coordination of the work of all trades.

ACCEPTED ✔
ACCEPTED AS NOTED
RETURNED FOR CORRECTION

02/09/2015 Tim Doggett
Date Design Engineer

NOTES:
1. SEE SHEETS 601 THRU 6xx FOR DETAILS.
2. VERIFY/APPROVE CLOUDED DIMENSIONS.
3. SPECIFY REQUIRED ADHESIVE AT ELASTROMETRIC PAD.

Record Drawings have been reviewed by the Project Engineer, and represent to the best of my knowledge, the project as constructed.
PE _____ Date 12/10/15

SOUTHCOAST REGION
CONSTRUCTION
FEB 03 2015

FOR FABRICATION
Dave Hankins 1-22-15

TOLERANCES:
(UNLESS OTHERWISE SPECIFIED)
3 PLACE DECIMALS +/- .01
2 PLACE DECIMALS +/- .03
FRACTIONS +/- 1/16
ANGLES +/- 2 DEGREES
MACHINE FINISHES 125 √ U.N.

REV	DESCRIPTION	BY	CHK	DATE
0	FOR FABRICATION	MRH	KB	Jan 6 2015
B	FOR APPROVAL	MRH	KB	Oct 24 2014
A	FOR APPROVAL	MRH	KB	Oct 23 2014

NOTES:
1. ERECT ALL MEMBER WITH THE MARKED END IN THE SAME RELATIVE POSITION AS SHOWN ON THE ERECTION DRAWING.
2. B.O.S.=BOTTOM OF STEEL. ELEVATIONS REFERENCED (xxx-x x/x) ARE TOP OF STEEL.
3. PLEASE PROVIDE INFORMATION AND VERIFICATIONS INDICATED IN CLOUDED AREAS. CLOUDED NOTES WITH NO REMARKS FROM THE APPROVAL AUTHORITY WILL BE CONSIDERED AS AN AFFIRMATION.

DETAILING: FABRICATION TECHNICAL SERVICES, INC.
www.FTSsteeldetailing.com
CONTACT: Kevin@FTSsteeldetailing.com
ph: (208) 457-8282

JESSE ENGINEERING CO.
1840 Marine View Drive, Tacoma, Washington 98422 Ph. 253-922-7433

REF: SHEETS 20, 21, 56 & 57 OF 57

PROJECT: IFA HOLLIS/CLARK BAY FERRY TERMINAL IMPROVEMENTS
CONTRACTOR: WESTERN MARINE CONSTRUCTION
DESCRIPTION: INTERMEDIATE RAMP ISO
DATE: 10-07-14
AGENCY JOB NO: 203960
DWG NO: A600

Jan 06 2015 06:37:32 PM SHEET SIZE: 24X36 JOB NO ###

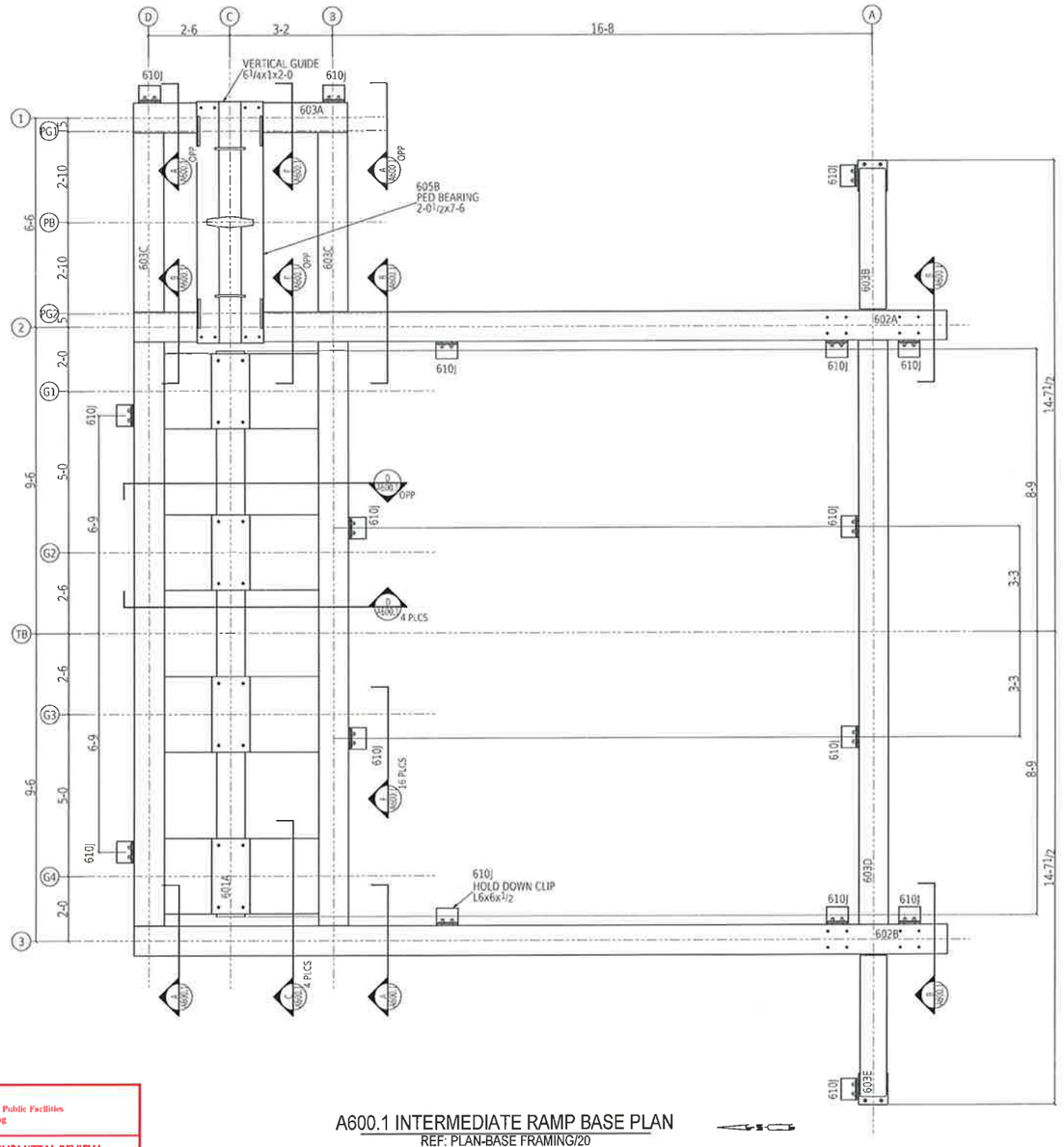

A600.1 INTERMEDIATE RAMP BASE PLAN
REF: PLAN-BASE FRAMING/20

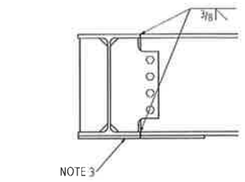

A/A600.1 SECTION
REF: A/20

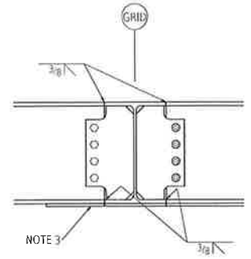

B/A600.1 SECTION
REF: B/20

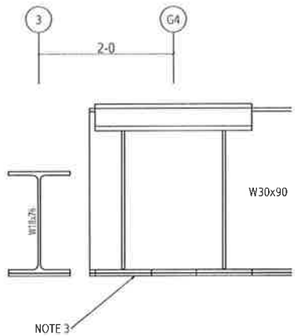

C/A600.1 SECTION
REF: C/20

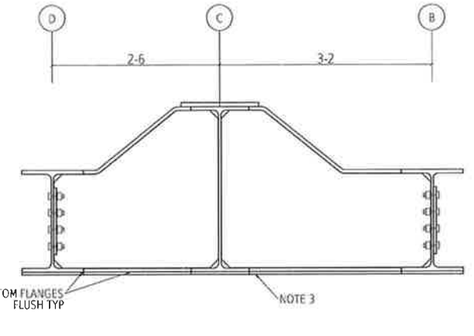

D/A600.1 SECTION
REF: D/20

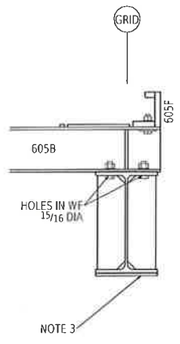

E/A600.1 SECTION
REF: E/20

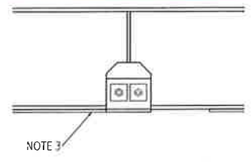

F/A600.1 DETAIL
HOLD DOWN CLIP
REF: 2 /21

Record Drawings have been reviewed by the Project Engineer, and represent to the best of my knowledge, the project as constructed.
PE _____ Date 12/10/15

FOR FABRICATION
Dave Hankins 1-22-15

State of Alaska
Dept. of Transportation and Public Facilities
Marine Facilities Engineering

CONTRACTOR SUBMITTAL REVIEW

Checking is only for conformance with the design concepts of the Project and compliance with the information given in the Contract Documents. The Contractor is responsible for dimensions to be confirmed and correlated at the job site for information that pertains solely to the fabrication process or to techniques of construction for coordination of the work of all trades

ACCEPTED ✔
ACCEPTED AS NOTED
RETURNED FOR CORRECTION
02/09/2015 Tim Doggett
Date Design Engineer

NOTES:
1. SEE SHEETS 601 THRU 6xx FOR DETAILS.
2. VERIFY/APPROVE CLOUDED DIMENSIONS.
3. SPECIFY REQUIRED ADHESIVE AT ELASTROMETRIC PAD.

TOLERANCES:
(UNLESS OTHERWISE SPECIFIED)
3 PLACE DECIMALS +/- .01
2 PLACE DECIMALS +/- .03
FRACTIONS +/- 1/16
ANGLES +/- 2 DEGREES
MACHINE FINISHES 125 √ U.N.

REV	DESCRIPTION	BY	CHK	DATE
0	FOR FABRICATION	MRH	KB	Jan 6 2015
A	FOR APPROVAL	MRH	KB	Oct 23 2014

NOTES:
1. ERECT ALL MEMBER WITH THE MARKED END IN THE SAME RELATIVE POSITION AS SHOWN ON THE ERECTION DRAWING.
2. B.O.S.=BOTTOM OF STEEL. ELEVATIONS REFERENCED (xxx-x x/x) ARE TOP OF STEEL.
3. PLEASE PROVIDE INFORMATION AND VERIFICATIONS INDICATED IN CLOUDED AREAS. CLOUDED NOTES WITH NO REMARKS FROM THE APPROVAL AUTHORITY WILL BE CONSIDERED AS AN AFFIRMATION.

DETAILING: FABRICATION TECHNICAL SERVICES, INC.
www.FTSsteeldetailing.com
CONTACT: Kevin@FTSsteeldetailing.com
ph: (208) 457-8282

JESSE ENGINEERING CO.
1840 Marine View Drive, Tacoma, Washington 98422 Ph. 253-922-7433

REF: SHEETS 20, 21, 56 & 57 OF 57

PROJECT: IFA HOLLIS/CLARK BAY FERRY TERMINAL IMPROVEMENTS
CONTRACTOR: WESTERN MARINE CONSTRUCTION
DESCRIPTION: INTERMEDIATE RAMP BASE ASSEMBLY
DATE: 10-07-14
FABRICATOR JOB NO: 203960
DRAWING NO: A600.1

IOB NO ### SHEET SIZE 24X36 07.14.17 PM Jan 06 2015

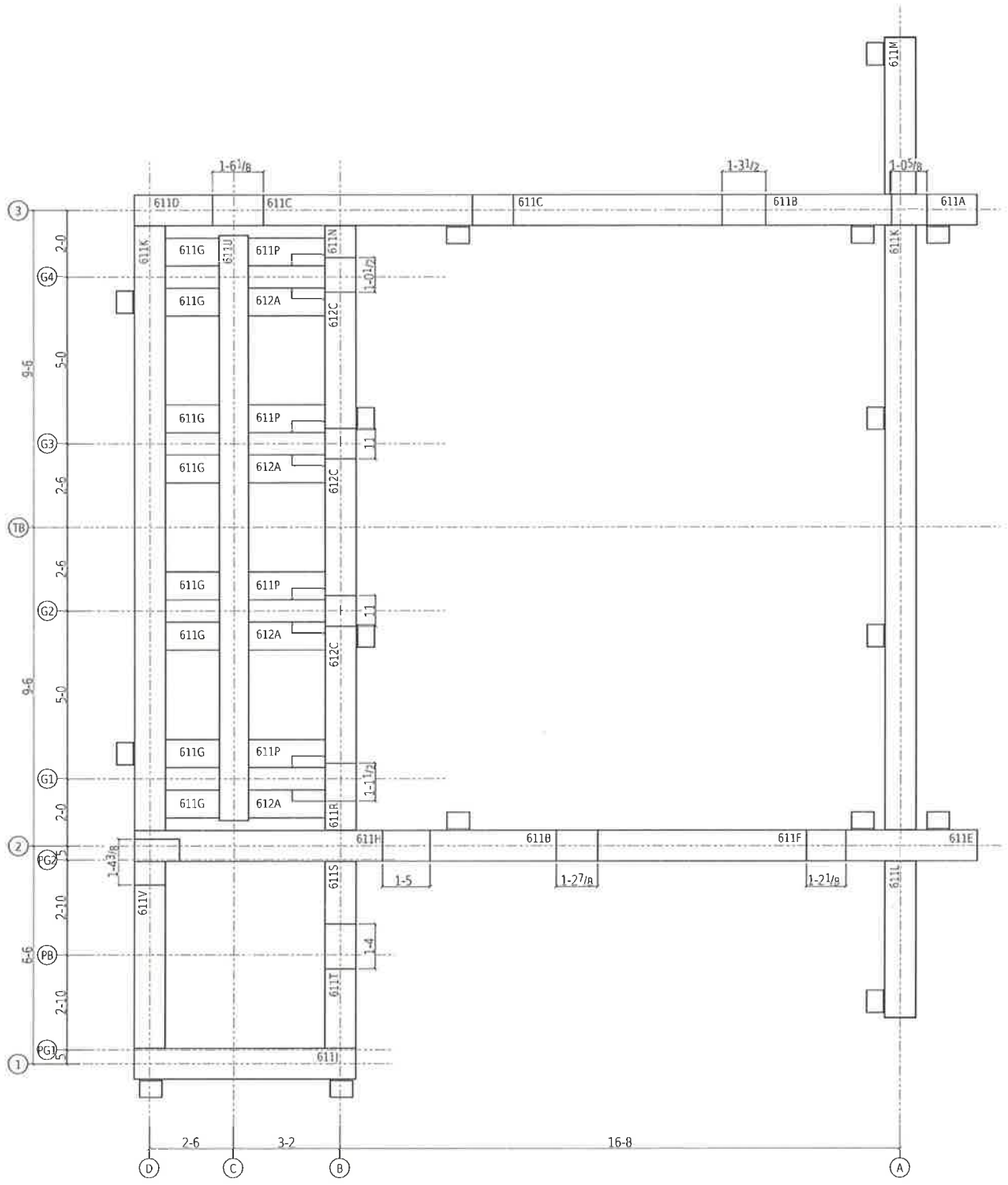

A600.2A INTERMEDIATE RAMP
ELASTROMERIC PAD PLAN

Record Drawings have been reviewed by the Project Engineer, and represent to the best of my knowledge, the project as constructed.
PE _____ Date 12/10/15

FOR FABRICATION
Dave Hankins 1-22-15

State of Alaska
Dept. of Transportation and Public Facilities
Marine Facilities Engineering

CONTRACTOR SUBMITTAL REVIEW

Checking is only for conformance with the design concepts of the Project and compliance with the information given in the Contract Documents. The Contractor is responsible for dimensions to be confirmed and correlated at the job site for information that pertains solely to the fabrication process or to techniques of construction for coordination of the work of all trades.

ACCEPTED ✔
ACCEPTED AS NOTED
RETURNED FOR CORRECTION

02/09/2015 Tim Doggett
Date Design Engineer

NOTES:
1. SEE SHEETS 601 THRU 6xx FOR DETAILS.
2. VERIFY/APPROVE CLOUDED DIMENSIONS.
3. SPECIFY REQUIRED ADHESIVE AT ELASTROMETRIC PAD.

TOLERANCES:
(UNLESS OTHERWISE SPECIFIED)
3 PLACE DECIMALS +/- .01
2 PLACE DECIMALS +/- .03
FRACTIONS +/- 1/16
ANGLES +/- 2 DEGREES
MACHINE FINISHES 125 √U.N.

REV	DESCRIPTION	BY	CHK	DATE
0	FOR FABRICATION	MRH	KB	Jan 6 2015
A	FOR APPROVAL	MRH	KB	Oct 23 2014

NOTES:
1. ERECT ALL MEMBER WITH THE MARKED END IN THE SAME RELATIVE POSITION AS SHOWN ON THE ERECTION DRAWING.
2. B.O.S.=BOTTOM OF STEEL. ELEVATIONS REFERENCED (xxx-x x/x) ARE TOP OF STEEL.
3. PLEASE PROVIDE INFORMATION AND VERIFICATIONS INDICATED IN CLOUDED AREAS. CLOUDED NOTES WITH NO REMARKS FROM THE APPROVAL AUTHORITY WILL BE CONSIDERED AS AN AFFIRMATION.

DETAILING: FABRICATION TECHNICAL SERVICES, INC.
www.FTSsteeldetailing.com
CONTACT: Kevin@FTSsteeldetailing.com
ph: (208) 457-8282

JESSE ENGINEERING CO.
1840 Marine View Drive, Tacoma, Washington 98422 Ph. 253-922-7433

REF: SHEETS 20, 21, 56 & 57 OF 57

PROJECT: IFA HOLLIS/CLARK BAY FERRY TERMINAL IMPROVEMENTS
CONTRACTOR: WESTERN MARINE CONSTRUCTION
DESCRIPTION: INTERMEDIATE RAMP BASE ASSEMBLY
DATE: 10-07-14
FABRICATOR JOB NO: 203960
DWG NO: A600.2

JOB NO ###
SHEET SIZE 24X36
06 37 33 PM
Jan 06 2015

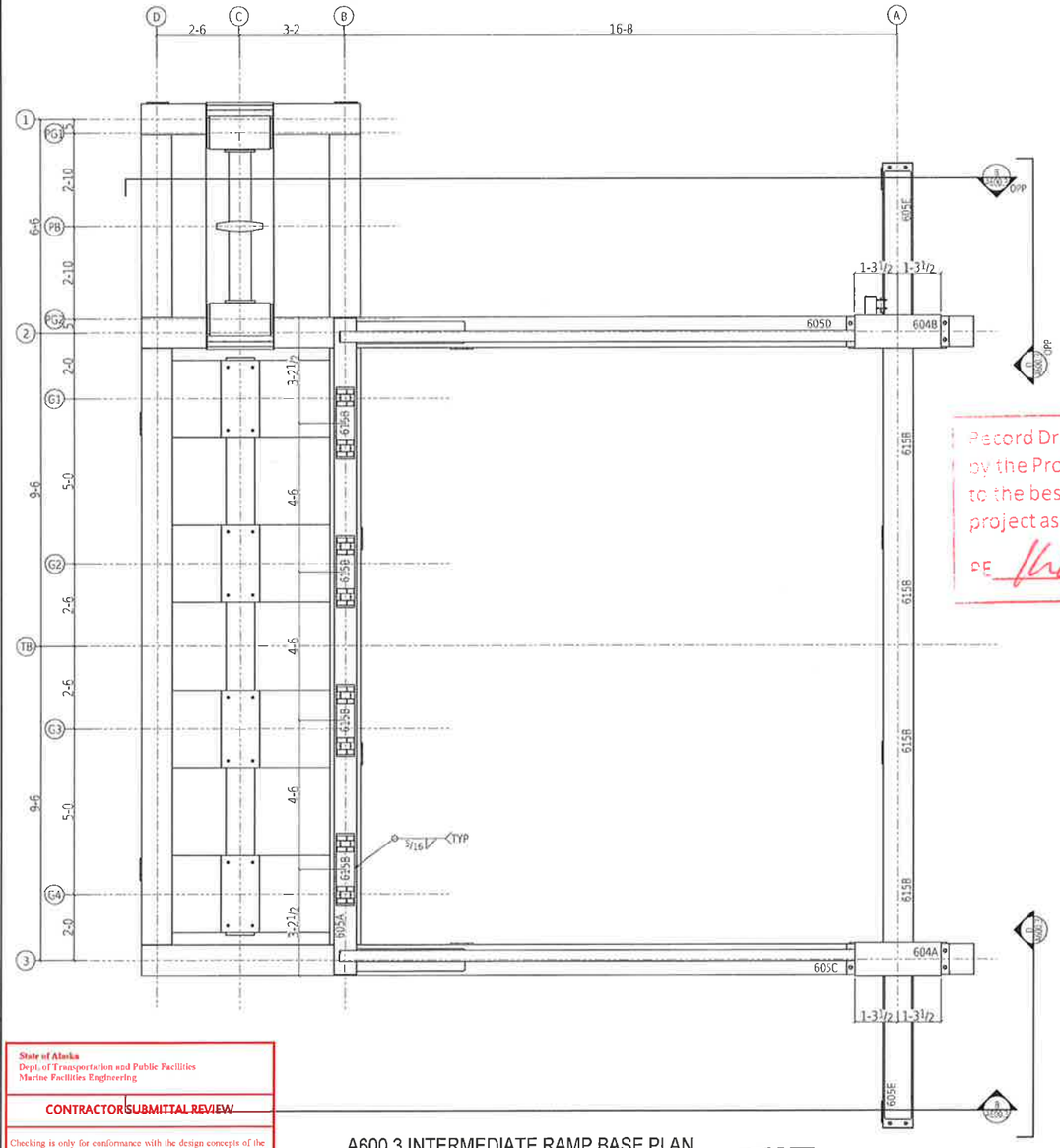
D
C
B
A
2-6
3-2
16-8
1
2
3
TB
G1
G2
G3
G4
PB
PG
2-10
2-10
2-0
5-0
4-6
2-6
2-0
6-6
9-6
9-6
3-2 1/2
3-2 1/2
6056
6058
6058
6058
6058
6058
605A
605D
605C
604B
604A
615B
615B
615B
615B
605E
605E
1-3 1/2
1-3 1/2
1-3 1/2
1-3 1/2
3/16 TYP
3/16
3/16
1/4
3/16
3/16
3/16

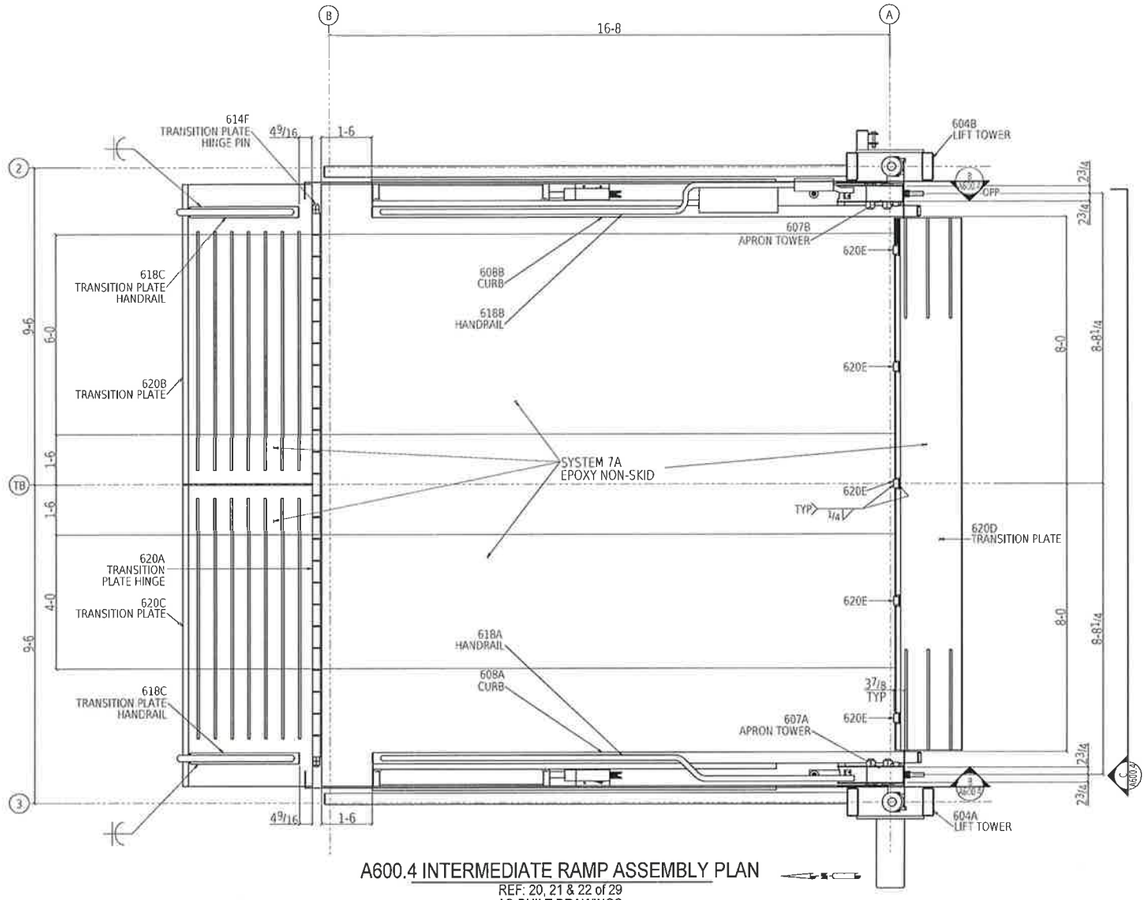

A600.4 INTERMEDIATE RAMP ASSEMBLY PLAN
REF: 20, 21 & 22 of 29
AS-BUILT DRAWINGS

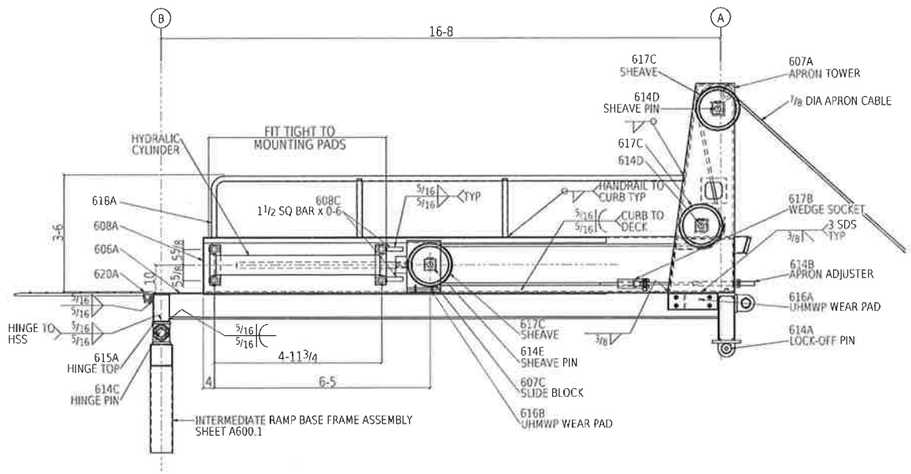

B/A600.4 INTERMEDIATE RAMP ELEVATION
REF: 20 & 21 OF 29
AS-BUILT DRAWINGS

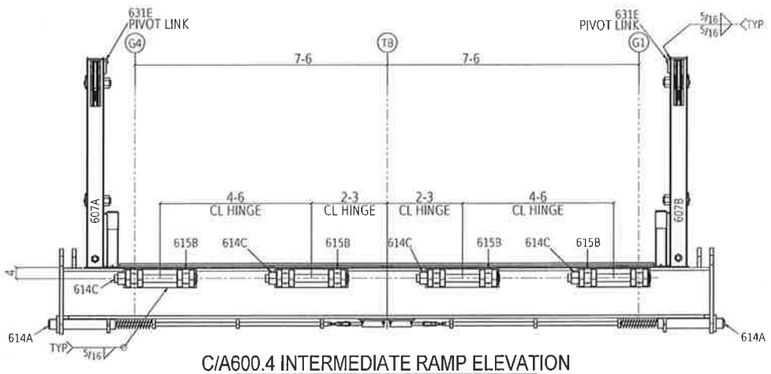

C/A600.4 INTERMEDIATE RAMP ELEVATION
REF: 20 & 21 OF 29
AS-BUILT DRAWINGS

State of Alaska
Dept. of Transportation and Public Facilities
Marine Facilities Engineering

CONTRACTOR SUBMITTAL REVIEW

Checking is only for conformance with the design concepts of the Project and compliance with the information given in the Contract Documents. The Contractor is responsible for dimensions to be confirmed and correlated at the job site for information that pertains solely to the fabrication process or to techniques of construction for coordination of the work of all trades.

ACCEPTED ✔
ACCEPTED AS NOTED
RETURNED FOR CORRECTION
02/09/2015 Tim Doggett
Date Design Engineer

NOTES:
1. SEE SHEETS 601 THRU 6xx FOR DETAILS.
2. VERIFY/APPROVE CLOUDED DIMENSIONS.
3. SPECIFY REQUIRED ADHESIVE AT ELASTROMETRIC PAD.

Record Drawings have been reviewed by the Project Engineer, and represent to the best of my knowledge, the project as constructed.
PE _____ Date 12/10/15

FOR FABRICATION
Dave Hankins 1-22-15

TOLERANCES:
(UNLESS OTHERWISE SPECIFIED)
3 PLACE DECIMALS +/- .01
2 PLACE DECIMALS +/- .03
FRACTIONS +/- 1/16
ANGLES +/- 2 DEGREES
MACHINE FINISHES 125 √ U.N.

REV	DESCRIPTION			
0	FOR FABRICATION	MRH	KB	Jan 6 2015
A	FOR APPROVAL	MRH	KB	Oct 23 2014
REV	DESCRIPTION	BY	CHK	DATE

NOTES:
1. ERECT ALL MEMBER WITH THE MARKED END IN THE SAME RELATIVE POSITION AS SHOWN ON THE ERECTION DRAWING.
2. B.O.S.=BOTTOM OF STEEL. ELEVATIONS REFERENCED (xxx-x x/x) ARE TOP OF STEEL.
3. PLEASE PROVIDE INFORMATION AND VERIFICATIONS INDICATED IN CLOUDED AREAS. CLOUDED NOTES WITH NO REMARKS FROM THE APPROVAL AUTHORITY WILL BE CONSIDERED AS AN AFFIRMATION.

DETAILING: FABRICATION TECHNICAL SERVICES, INC.
www.FTSsteeldetailing.com
CONTACT: Kevin@FTSsteeldetailing.com
ph: (208) 457-8282

JESSE ENGINEERING CO.
1840 Marine View Drive, Tacoma, Washington 98422 Ph. 253-922-7433

REF: SHEETS 20, 21, 56 & 57 OF 57

PROJECT: IFA HOLLIS/CLARK BAY FERRY TERMINAL IMPROVEMENTS
CONTRACTOR: WESTERN MARINE CONSTRUCTION
DESCRIPTION: INTERMEDIATE RAMP ASSEMBLY
DATE: 10-07-14
FABRICATION JOB NO: 203960
DRAWING NO: A600.4

JOB NO ####
SHEET SIZE: 24X36
06 37 35 PM
Jan 06 2015

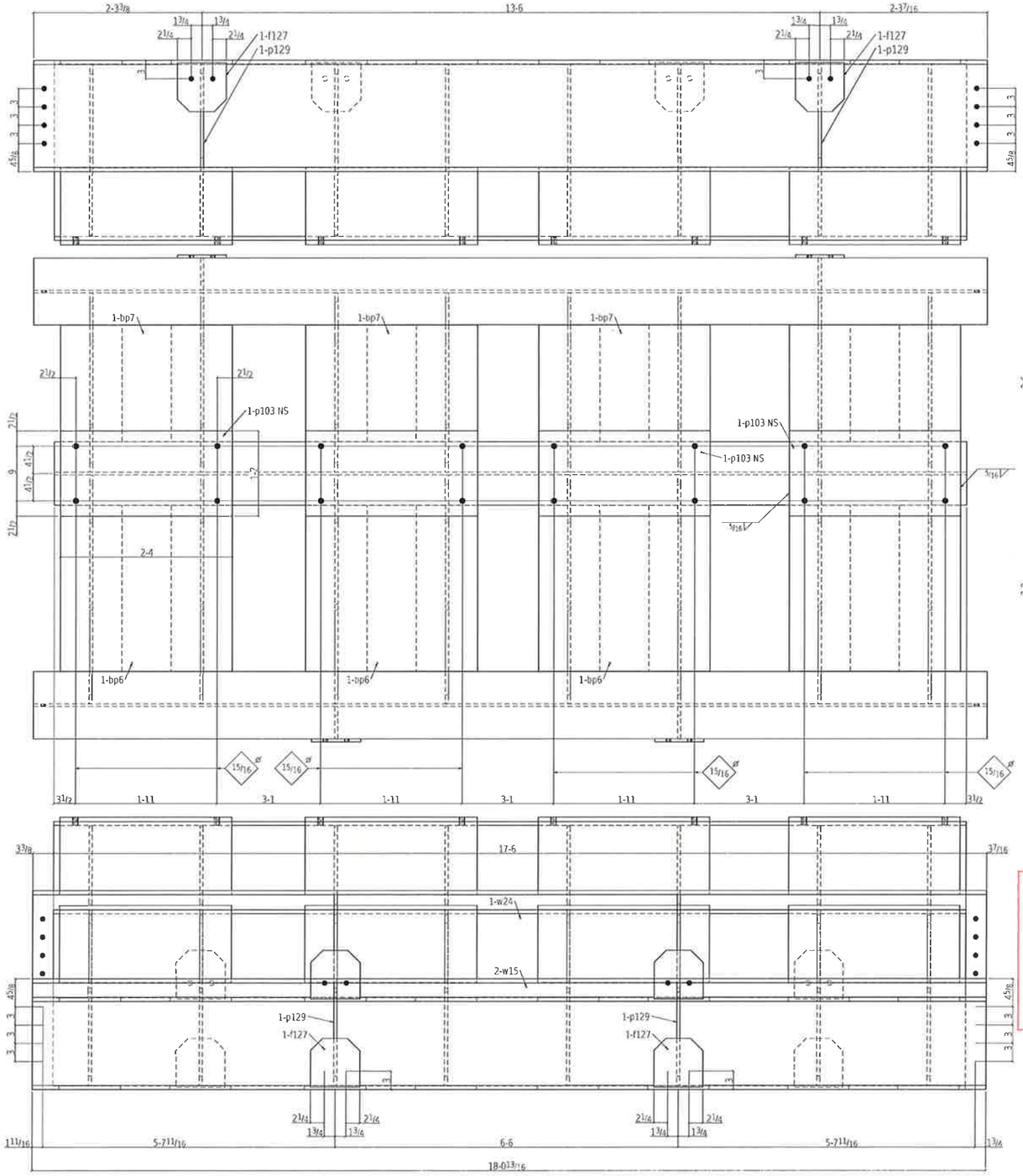

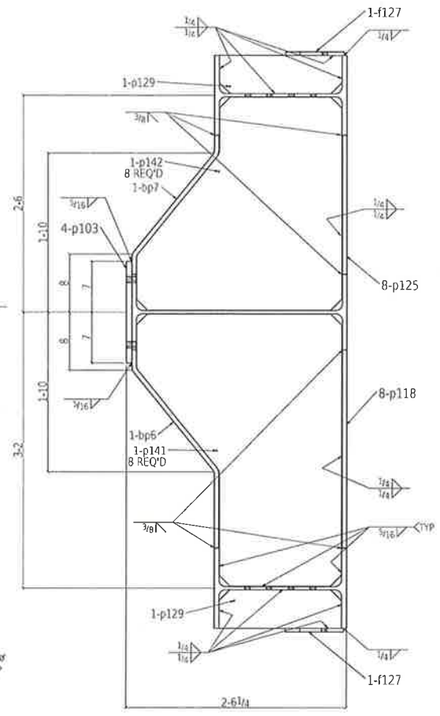

NOTES:
1. BOLTED CONNECTIONS ARE SLIP-CRITICAL, CLASS C (ROUGHENED HDG).

ONE SEAWARD BEARING 601A

BILL OF MATERIAL

QTY total	Piece Mark	QTY unit	Description	Length	Remarks	Weight Unit
ONE	601A		SEAWARD BEARING		HOT DIP GALVANIZE	8619
1	w24	1	W30x90	17 6	A992	1575
2	w15	2	W18x76	18 0 13/16	A992	1373
4	p103	4	PL 3"x14	2 4	4709-50	83
4	p66	4	PL 5/8x28	2 7 1/8	BENT A36	155
4	p67	4	PL 5/8x28	1 11 1/8	BENT A36	115
8	p118	8	PL 3/4x10	2 3 1/8	A36	68
8	p125	8	PL 5/8x10	1 7 1/4	A36	34
8	p141	8	PL 1/2x28 3/16	3 1 1/2	A36	150
8	p142	8	PL 1/2x28 3/16	2 5 1/2	A36	118
4	f127	4	FB 1/2x8	0 8	A36	9
4	p129	4	PL 1/2x5 3/16	1 2 7/8	A36	13
			FIELD BOLTS			
16			3/4 Dia A325TC	0 2 1/4	4 HD WASH GALV	

Total weight 8619

Record Drawings have been reviewed by the Project Engineer, and represent to the best of my knowledge, the project as constructed.
PE [illegible] Date 12/10/15

FOR FABRICATION
Dave Hankins 1-22-15

REV	DESCRIPTION	BY	CHK	DATE
0	FOR FABRICATION	MRH	KB	Jan 6 2015
A	FOR APPROVAL	MRH	KB	Oct 23 2014

DETAILING:
JOB: 2265
REF: E1

FABRICATION TECHNICAL SERVICES, INC.
307 N. LINCOLN STE. B POST FALLS, ID 83854
(208) 457-8282 fax: (208) 457-8208
EMAIL: kevin@FTSsteeldetailing.com

HOLES DIA UNO: 13/16
SURF PREP: SEE B.O.M.
FINISH: SEE B.O.M.

WELD 3/16 FILLET U.N.O. (E70XX)
W.P. (TAILS)
COL BASE PLATES ARE ALWAYS SECTION CUTS LOOKING DOWN

State of Alaska
Dept. of Transportation and Public Facilities
Marine Facilities Engineering

CONTRACTOR SUBMITTAL REVIEW

Checking is only for conformance with the design concepts of the Project and compliance with the information given in the Contract Documents. The Contractor is responsible for dimensions to be confirmed and correlated at the job site for information that pertains solely to the fabrication process or to techniques of construction for coordination of the work of all trades

ACCEPTED ✓
ACCEPTED AS NOTED
RETURNED FOR CORRECTION

02/09/2015 Tim Doggett
Date Design Engineer

TOLERANCES:
(UNLESS OTHERWISE SPECIFIED)
3 PLACE DECIMALS +/- .01
2 PLACE DECIMALS +/- .03
FRACTIONS +/- 1/16
ANGLES +/- 2 DEGREES
MACHINE FINISHES 125 √ U.N.

JESSE ENGINEERING CO.
1840 Marine View Drive, Tacoma, Washington 98422 Ph. 253-922-7433

PROJECT: IFA HOLLIS/CLARK BAY FERRY TERMINAL IMPROVEMENTS
CONTRACTOR: WESTERN MARINE CONSTRUCTION
DATE: 10-07-14
JOB NO: 203960
DESCRIPTION: INTERMEDIATE RAMP BASE ASSEMBLY SEAWARD BEARING
DWG NO: 601

Jan 06 2015 06:46:44 PM SHEET SIZE 24X36

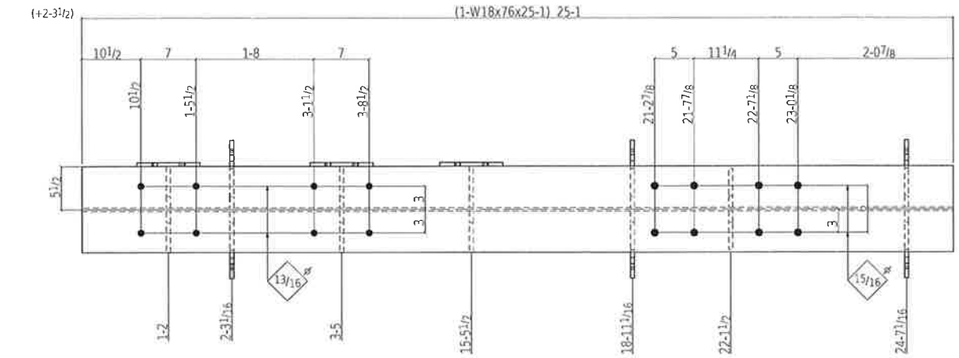

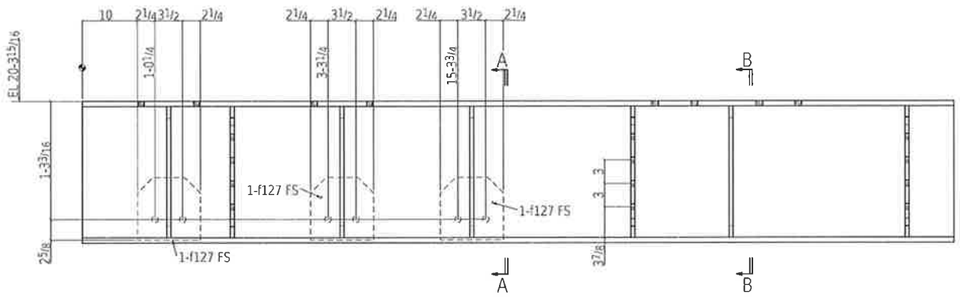

ONE BASE FRAMING 602A

W 18 3/16 x 7/16
F 11 1/16 x 11/16
K 19/16 x 1 1/8

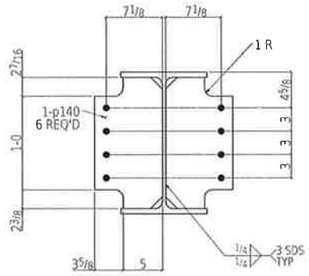

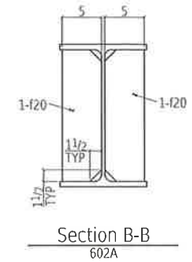

Section B-B
602A

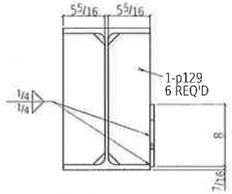

Section A-A
602A

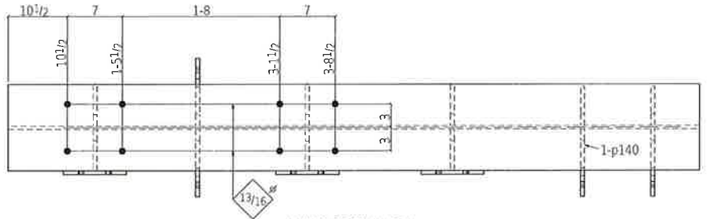

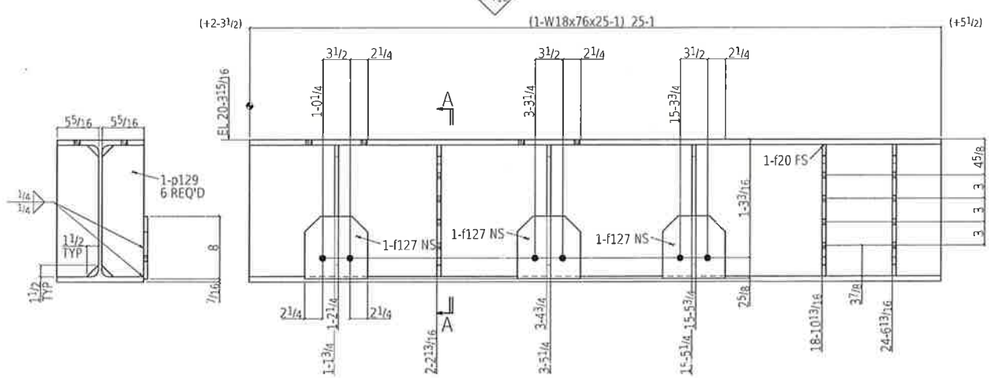

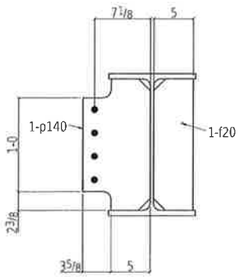

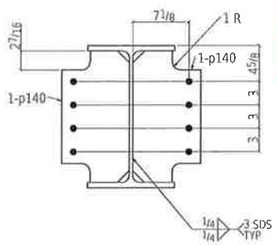

Section A-A
602B

ONE BASE FRAMING 602B

W 18 3/16 x 7/16
F 11 1/16 x 11/16
K 19/16 x 1 1/8

Record Drawings have been reviewed by the Project Engineer, and represent to the best of my knowledge, the project as constructed.

PE [signature] Date 12/10/15

State of Alaska
Dept. of Transportation and Public Facilities
Marine Facilities Engineering

CONTRACTOR SUBMITTAL REVIEW

Checking is only for conformance with the design concepts of the Project and compliance with the information given in the Contract Documents. The Contractor is responsible for dimensions to be confirmed and correlated at the job site for information that pertains solely to the fabrication process or to techniques of construction for coordination of the work of all trades.

ACCEPTED ✔
ACCEPTED AS NOTED
RETURNED FOR CORRECTION

02/09/2015 Tim Doggett
Date Design Engineer

FOR FABRICATION
Dave Hankins 1-22-15

BILL OF MATERIAL

QTY total	Piece Mark	QTY unit	Description	Length		Remarks	Weight Unit
ONE	602B		BASE FRAMING			HOT DIP GALVANIZE	2116
1	602B	1	W18x76	25	1	A992	1906
4	p140	4	PL 1/2x8 3/8	1	4 7/8	A36	21
3	f127	3	FBI 2x8	0	8	A36	9
6	p129	6	PL 1/2x5 5/16	1	4 7/8	A36	13
2	f20	2	FBI 2x5	1	4 7/8	A36	12
			FIELD BOLTS				
8			3/4 Dia A325TC	0	2 1/4	+1HD WASH GALV	
ONE	602A		BASE FRAMING			HOT DIP GALVANIZE	2157
1	602A	1	W18x76	25	1	A992	1906
6	p140	6	PL 1/2x8 3/8	1	4 7/8	A36	21
3	f127	3	FBI 2x8	0	8	A36	9
6	p129	6	PL 1/2x5 5/16	1	4 7/8	A36	13
2	f20	2	FBI 2x5	1	4 7/8	A36	12
			FIELD BOLTS				
12			3/4 Dia A325TC	0	2 1/4	+1HD WASH GALV	

Total weight 4273

REV	DESCRIPTION	BY	CHK	DATE
0	FOR FABRICATION	MRH	KB	Jan 6 2015
A	FOR APPROVAL	MRH	KB	Oct 23 2014

DETAILING:
JOB: 2265
REF E1

FABRICATION TECHNICAL SERVICES, INC.
307 N. LINCOLN STE. B, POST FALLS, ID 83854
(208) 457-8282 fax: (208) 457-8208
EMAIL: kevin@FTSsteeldetailing.com

HOLES DIA UNO: 13/16
SURF PREP SEE B.O.M.
FINISH: SEE B.O.M.

WELD 3/16 FILLET U.N.O. (E70XX)
W.P. (TAILS)
COL BASE PLATES ARE ALWAYS SECTION CUTS LOOKING DOWN

JESSE ENGINEERING CO.
1840 Marine View Drive, Tacoma, Washington 98422 Ph. 253-922-7433

TOLERANCES:
(UNLESS OTHERWISE SPECIFIED)
3 PLACE DECIMALS +/- .01
2 PLACE DECIMALS +/- .03
FRACTIONS +/- 1/16
ANGLES +/- 2 DEGREES
MACHINE FINISHES 125 U.N.

PROJECT: IFA HOLLIS/CLARK BAY FERRY TERMINAL IMPROVEMENTS
CONTRACTOR: WESTERN MARINE CONSTRUCTION
DESCRIPTION: INTERMEDIATE RAMP BASE FRAME
DATE: 10-07-14
JOB NO: 203960
DWG NO: 602

SHEET SIZE 24X36
06 37 36 PM
Jan 06 2015

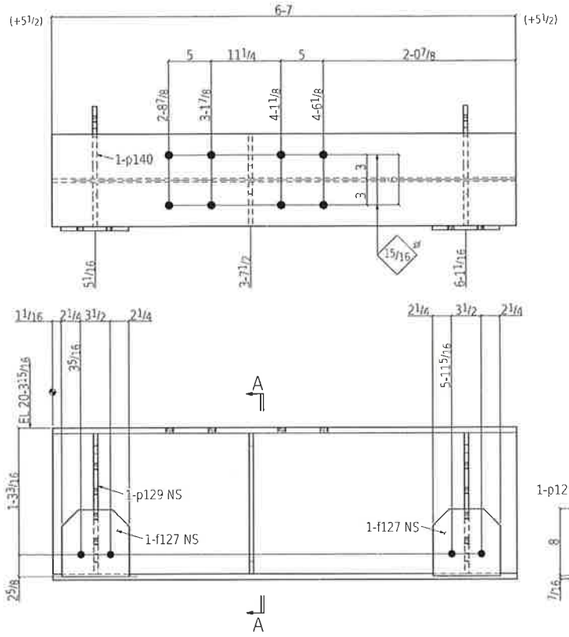

ONE BASE FRAMING 603A

W	18 3/16 x 7/16
F	11 1/16 x 11/16
K	1 9/16 x 1 1/8

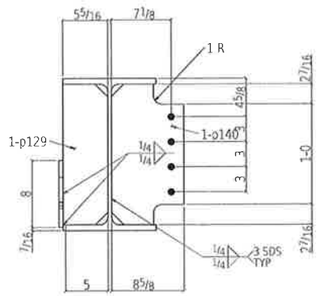

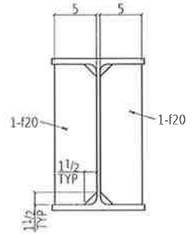

Section A-A
603A

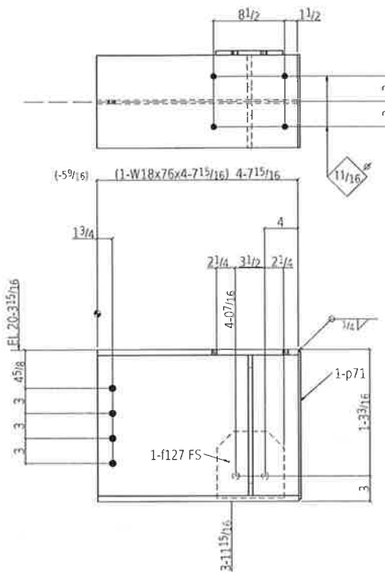

ONE BASE FRAMING 603B

W	18 3/16 x 7/16
F	11 1/16 x 11/16
K	1 9/16 x 1 1/8

State of Alaska
Dept. of Transportation and Public Facilities
Marine Facilities Engineering

CONTRACTOR SUBMITTAL REVIEW

Checking is only for conformance with the design concepts of the Project and compliance with the information given in the Contract Documents. The Contractor is responsible for dimensions to be confirmed and correlated at the job site for information that pertains solely to the fabrication process or to techniques of construction for coordination of the work of all trades.

ACCEPTED ✓
ACCEPTED AS NOTED
RETURNED FOR CORRECTION

02/09/2015 Tim Doggett
Date Design Engineer

BILL OF MATERIAL

QTY total	Piece Mark	QTY unit	Description	Length		Remarks	Weight Unit
ONE 603A			BASE FRAMING			HOT DIP GALVANIZE	693
1	603A	1	W18x76	6	2 1/16	A992	501
2	p140	2	PL 1/2x8 3/8	1	0 1/2	A36	21
2	f127	2	FBT 1/2x8	0	8	A36	9
2	p129	2	PL 1/2x5 5/16	1	0 1/2	A36	13
2	f20	2	FBT 1/2x5	1	0 1/2	A36	12
			FIELD BOLTS				
8			3/4 D A325TC	0	2 1/2	+1HD WASH GALV	
ONE	603B		BASE FRAMING			HOT DIP GALVANIZE	612
1	603B	1	W18x76	4	2 15/16	A992	354
1	f127	1	FBT 1/2x8	0	8	A36	9
2	p129	2	PL 1/2x5 5/16	1	0 1/2	A36	13
1	p71	1	PL 1/2x11 1/16	1	5 11/16	A36	14
2	603C		BASE FRAMING			HOT DIP GALVANIZE	623
2	603C	1	W18x76	5	6 13/16	A992	623
			FIELD BOLTS				
4			3/4 D A325TC	0	2 1/2	+1HD WASH GALV	
ONE	603D		BASE FRAMING			HOT DIP GALVANIZE	1242
1	603D	1	W18x76	3R	0 13/16	A992	1213
2	f127	2	FBT 1/2x8	0	8	A36	9
4	p129	4	PL 1/2x5 5/16	1	0 1/2	A36	13
ONE	603E		BASE FRAMING			HOT DIP GALVANIZE	402
1	603E	1	W18x76	4	2 15/16	A992	354
1	f127	1	FBT 1/2x8	0	8	A36	9
2	p129	2	PL 1/2x5 5/16	1	0 1/2	A36	13
1	p71	1	PL 1/2x11 1/16	1	5 11/16	A36	14

Total weight 3703

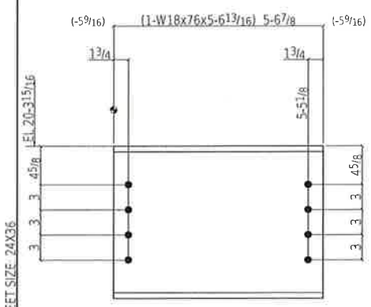

2 BASE FRAMINGS 603C

W	18 3/16 x 7/16
F	11 1/16 x 11/16
K	1 9/16 x 1 1/8

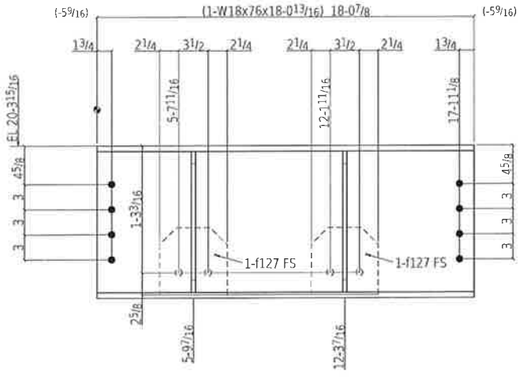

ONE BASE FRAMING 603D

W	18 3/16 x 7/16
F	11 1/16 x 11/16
K	1 9/16 x 1 1/8

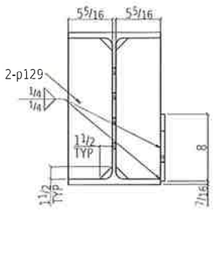

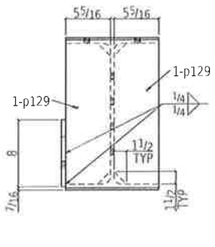

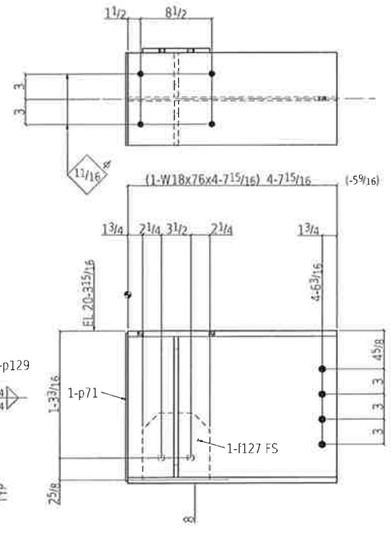

ONE BASE FRAMING 603E

W	18 3/16 x 7/16
F	11 1/16 x 11/16
K	1 9/16 x 1 1/8

REV	DESCRIPTION	BY	CHK	DATE
0	FOR FABRICATION	MRH	KB	Jan 6 2015
A	FOR APPROVAL	MRH	KB	Oct 23 2014

DETAILING
JOB: 2265
REF: E1

FABRICATION TECHNICAL SERVICES, INC.
307 N. LINCOLN STE. B POST FALLS, ID 83854
(208) 457-8282 fax (208) 457-8208
EMAIL: kevin@FTSsteeldetailing.com

HOLES DIA UNO 13/16
SURF PREP SEE B.O.M.
FINISH: SEE B.O.K.

WELD 3/16 FILLET U.N.O. (E70XX)
W.P. (TAILS)
COL BASE PLATES ARE ALWAYS SECTION CUTS LOOKING DOWN

Record Drawings have been reviewed by the Project Engineer, and represent to the best of my knowledge, the project as constructed.
PE [signature] Date 12/10/15

FOR FABRICATION
Dave Hankins 1-22-15

TOLERANCES:
(UNLESS OTHERWISE SPECIFIED)
3 PLACE DECIMALS +/- .01
2 PLACE DECIMALS +/- .03
FRACTIONS +/- 1/16
ANGLES +/- 2 DEGREES
MACHINE FINISHES 125 √ U.N.

JESSE ENGINEERING CO.
1840 Marine View Drive, Tacoma, Washington 98422 Ph. 253-922-7433

PROJECT: IFA HOLLIS/CLARK BAY FERRY TERMINAL IMPROVEMENTS
CONTRACTOR: WESTERN MARINE CONSTRUCTION
DESCRIPTION: INTERMEDIATE RAMP BASE FRAME
DATE: 10-07-14
JOB NO: 203960
DWG NO: 603

SHEET SIZE: 24X36
03 35 47 PM
Jan 07 2015

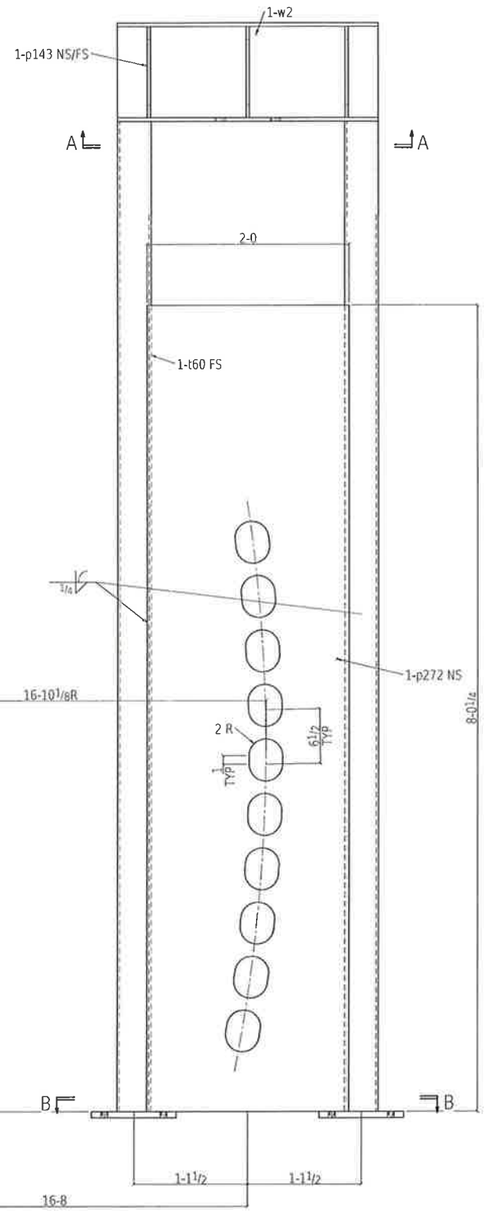

ONE LIFT TOWER 604A

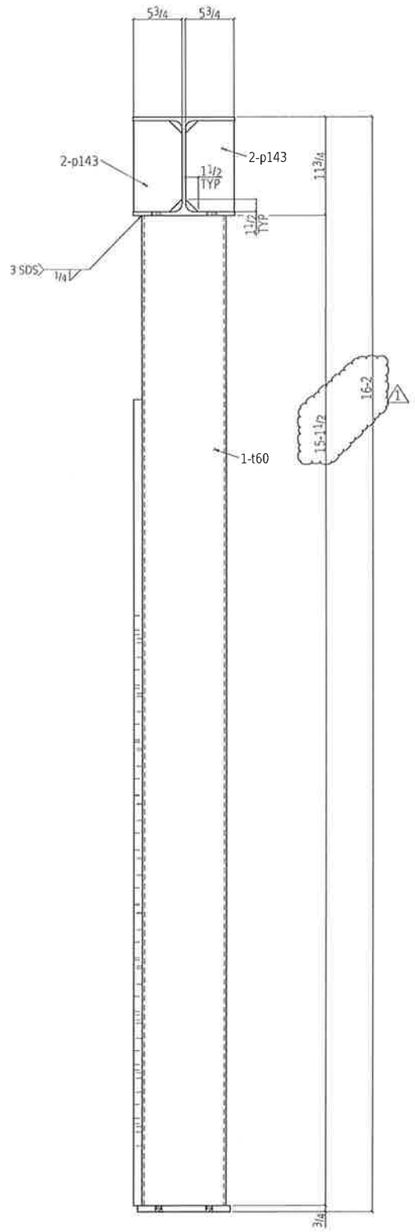

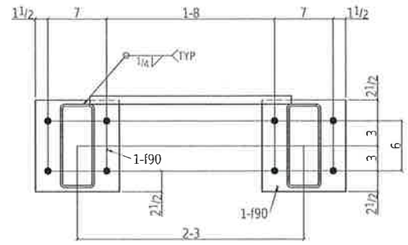

Section B-B
604A

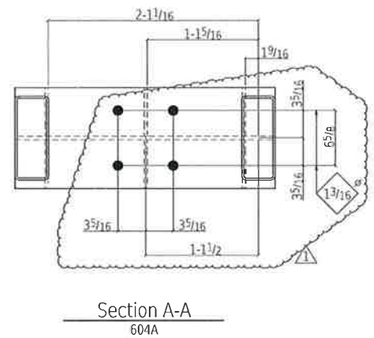

Section A-A
604A

BILL OF MATERIAL

QTY total	Piece Mark	QTY unit	Description	Length	Remarks	Weight Unit
ONE	604A		LIFT TOWER		HOT DIP GALVANIZE	1557
1	w2	1	HP12X53	2 7	4992	137
2	t60	2	HSS10x8x1/2	15 1 1/2	A500B	339
1	p272	1	PL1x24	8 0 1/4	A36	655
2	f90	2	FB9(ex)10	0 11	A36	23
6	p143	6	PL3/8x5 3/4	0 10 15/16	A36	7
			FIELD BOLTS			
8			3/4 Dia A325TC	0 2 3/4	+1HD WASH GALV	
ONE	604A		LIFT TOWER		HOT DIP GALVANIZE	1557
1	w2	1	HP12X53	2 7	4992	137
2	t60	2	HSS10x8x1/2	15 1 1/2	A500B	339
1	p272	1	PL1x24	8 0 1/4	A36	655
2	f90	2	FB9(ex)10	0 11	A36	23
6	p143	6	PL3/8x5 3/4	0 10 15/16	A36	7
			FIELD BOLTS			
8			3/4 Dia A325TC	0 2 3/4	+1HD WASH GALV	

Total weight 3114

REV	DESCRIPTION	BY	CHK	DATE
1	ACTUATORS/DIMS	MRH	KB	Jan 20 2015
0	FOR FABRICATION	MRH	KB	Jan 6 2015
A	FOR APPROVAL	MRH	KB	Oct 23 2014

Record Drawings have been reviewed by the Project Engineer, and represent to the best of my knowledge, the project as constructed.

PE _____ Date 12/10/15

FOR FABRICATION

Dave Hankins 1-23-15

DETAILING:
JOB: 2265
REF: E1

FABRICATION TECHNICAL SERVICES, INC.
307 N. LINCOLN STE. B. POST FALLS, ID 83854
(208) 457-8282 fax: (208) 457-8208
EMAIL: kevin@FTSsteeldetailing.com

HOLES DIA UNO: 13/16
SURF PREP SEE B.O.M.
FINISH: SEE B.O.M.

WELD 3/16 FILLET U.N.O. (E70XX)
W.P. (TAILS)
COL BASE PLATES ARE ALWAYS SECTION CUTS LOOKING DOWN

State of Alaska
Dept. of Transportation and Public Facilities
Marine Facilities Engineering

CONTRACTOR SUBMITTAL REVIEW

Checking is only for conformance with the design concepts of the Project and compliance with the information given in the Contract Documents. The Contractor is responsible for dimensions to be confirmed and correlated at the job site for information that pertains solely to the fabrication process or to techniques of construction for coordination of the work of all trades.

ACCEPTED ✔
ACCEPTED AS NOTED
RETURNED FOR CORRECTION

02/09/2015 Tim Doggett
Date Design Engineer

TOLERANCES:
(UNLESS OTHERWISE SPECIFIED)
3 PLACE DECIMALS +/- .01
2 PLACE DECIMALS +/- .03
FRACTIONS +/- 1/16
ANGLES +/- 2 DEGREES
MACHINE FINISHES 125 √U.N.

JESSE ENGINEERING CO.
1840 Marine View Drive, Tacoma, Washington 98422 Ph. 253-922-7433

PROJECT: IFA HOLLIS/CLARK BAY FERRY TERMINAL IMPROVEMENTS
CONTRACTOR: WESTERN MARINE CONSTRUCTION
DESCRIPTION: INTERMEDIATE RAMP
DATE: 10-07-14
JOB NO: 203960
DWG NO: 604

SHEET SIZE 24X36
04 35 00 PM
Jan 20 2015

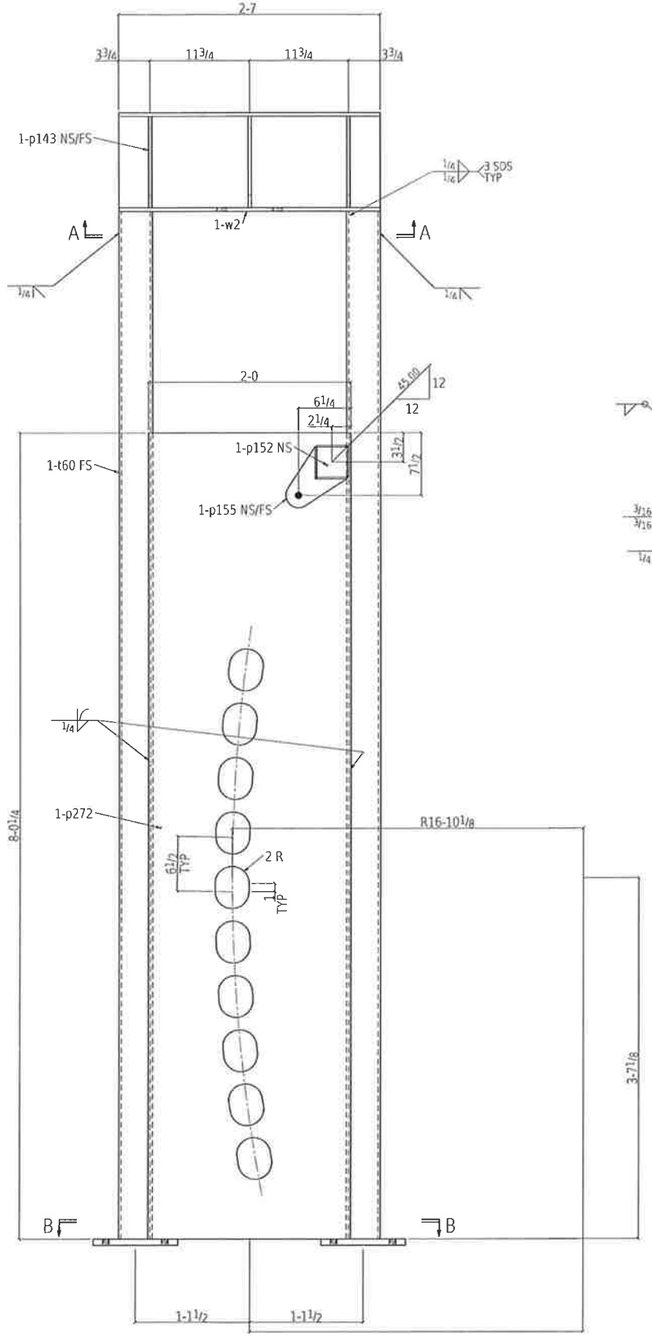

ONE LIFT TOWER 604B

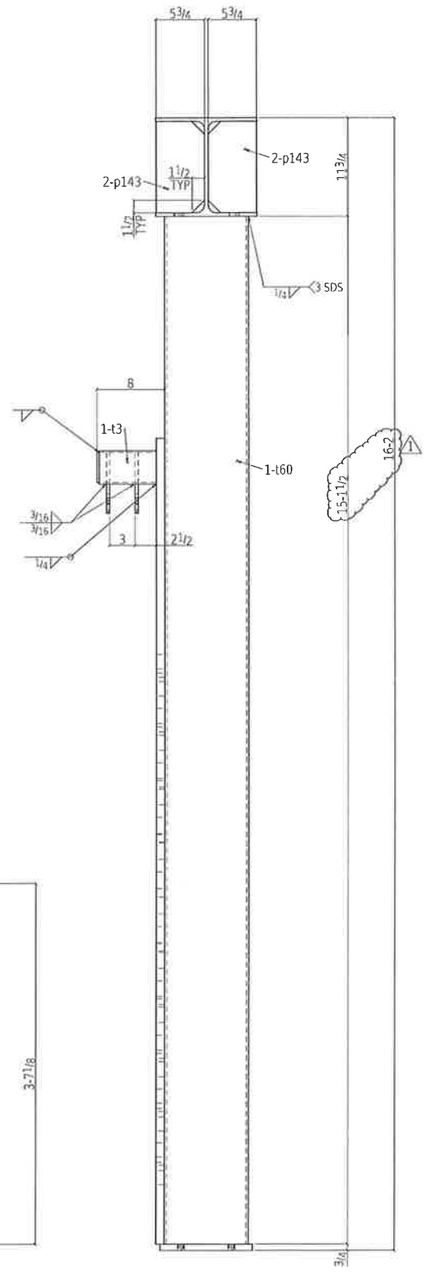

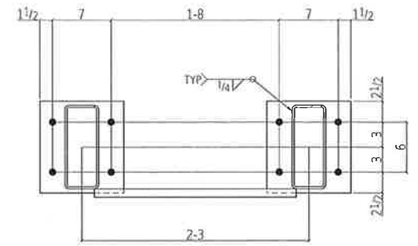

Section B-B
604B

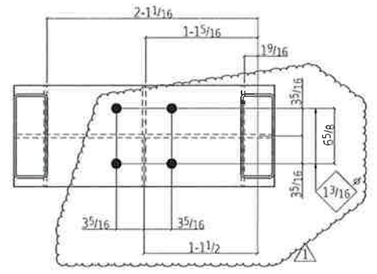

Section A-A
604B

BILL OF MATERIAL

QTY total	Piece Mark	QTY unit	Description	Length	Remarks	Weight Unit
ONE	604B		LIFT TOWER		HOT DIP GALVANIZE	1575
1	m2	1	HP12X53	2 7	A992	137
2	t60	2	HSS10x8x1/4	15 1 1/2	A500B	339
1	t3	1	HSS4x4x3/16	0 6 3/8	A500B	5
1	p272	1	PL1x24	8 0 1/4	A36	655
2	f90	2	FB3/8x10	0 11	A36	23
2	p155	2	PL3/8x7 5/16	0 7 5/16	A36	6
6	p143	6	PL3/8x5 3/4	0 10 15/16	A36	7
1	p152	1	PL1/4x3 5/8	0 3 5/8	A36	1
			FIELD BOLTS			
1			3/4 Dia A325TC	0 5 1/2	+2HD WASH +1MNT GALV	
8			3/4 Dia A325TC	0 2 3/4	+1HD WASH GALV	
ONE	604B		LIFT TOWER		HOT DIP GALVANIZE	1575
1	m2	1	HP12X53	2 7	A992	137
2	t60	2	HSS10x8x1/4	15 1 1/2	A500B	339
1	t3	1	HSS4x4x3/16	0 6 3/8	A500B	5
1	p272	1	PL1x24	8 0 1/4	A36	655
2	f90	2	FB3/8x10	0 11	A36	23
2	p155	2	PL3/8x7 5/16	0 7 5/16	A36	6
6	p143	6	PL3/8x5 3/4	0 10 15/16	A36	7
1	p152	1	PL1/4x3 5/8	0 3 5/8	A36	1
			FIELD BOLTS			
1			3/4 Dia A325TC	0 5 1/2	+2HD WASH +1MNT GALV	
8			3/4 Dia A325TC	0 2 3/4	+1HD WASH GALV	
ONE	604B		LIFT TOWER		HOT DIP GALVANIZE	1575
1	m2	1	HP12X53	2 7	A992	137
2	t60	2	HSS10x8x1/4	15 1 1/2	A500B	339
1	t3	1	HSS4x4x3/16	0 6 3/8	A500B	5
1	p272	1	PL1x24	8 0 1/4	A36	655
2	f90	2	FB3/8x10	0 11	A36	23
2	p155	2	PL3/8x7 5/16	0 7 5/16	A36	6
6	p143	6	PL3/8x5 3/4	0 10 15/16	A36	7
1	p152	1	PL1/4x3 5/8	0 3 5/8	A36	1
			FIELD BOLTS			
1			3/4 Dia A325TC	0 5 1/2	+2HD WASH +1MNT GALV	
8			3/4 Dia A325TC	0 2 3/4	+1HD WASH GALV	

Total weight 4724

Record Drawings have been reviewed by the Project Engineer, and represent to the best of my knowledge, the project as constructed.

PE Date 12/10/15

State of Alaska
Dept. of Transportation and Public Facilities
Marine Facilities Engineering

CONTRACTOR SUBMITTAL REVIEW

Checking is only for conformance with the design concepts of the Project and compliance with the information given in the Contract Documents. The Contractor is responsible for dimensions to be confirmed and correlated at the job site for information that pertains solely to the fabrication process or to techniques of construction for coordination of the work of all trades.

ACCEPTED ✓
ACCEPTED AS NOTED
RETURNED FOR CORRECTION

02/09/2015 Tim Doggett
Date Design Engineer

FOR FABRICATION
Dave Hankins 1-23-15

REV	DESCRIPTION	BY	CHK	DATE
1	HEIGHT REVISED AND ACTUATOR HOLES ADDED	MRH	KB	Jan 23 2015
0	FOR FABRICATION	MRH	KB	Jan 6 2015

DETAILING:
JOB: 2265
REF: E1

FABRICATION TECHNICAL SERVICES, INC.
307 N. LINCOLN STE. B, POST FALLS, ID 83854
(208) 457-8282 fax: (208) 457-8208
EMAIL: kevin@FTSsteeldetailing.com

HOLES DIA UNO: 13/16
SURF PREP SEE B.O.M.
FINISH: SEE B.O.M.

WELD 3/16 FILLET U.N.O. (E70XX)
W.P. (TAILS)
COL BASE PLATES ARE ALWAYS SECTION CUTS LOOKING DOWN

TOLERANCES:
(UNLESS OTHERWISE SPECIFIED)
3 PLACE DECIMALS +/- .01
2 PLACE DECIMALS +/- .03
FRACTIONS +/- 1/16
ANGLES +/- 2 DEGREES
MACHINE FINISHES 125 √ U.N.

JESSE ENGINEERING CO.
1840 Marine View Drive, Tacoma, Washington 98422 Ph. 253-922-7433

PROJECT: IFA HOLLIS/CLARK BAY FERRY TERMINAL IMPROVEMENTS
CONTRACTOR: WESTERN MARINE CONSTRUCTION
DESCRIPTION: INTERMEDIATE RAMP
DATE: 12-31-14
JOB NO: 203960
DWG NO: 604.1

SHEET SIZE: 24X36
Jan 23 2015 01:59:55 PM

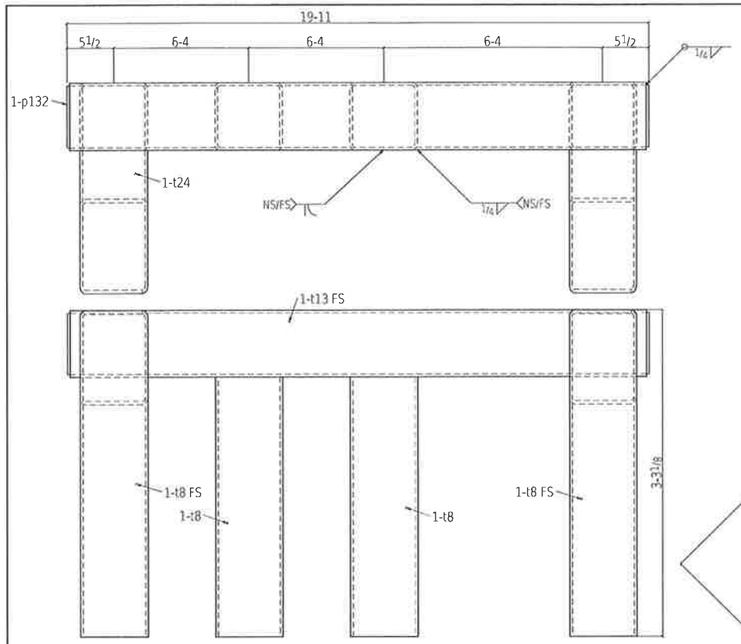

ONE RAMP BEARING 605A

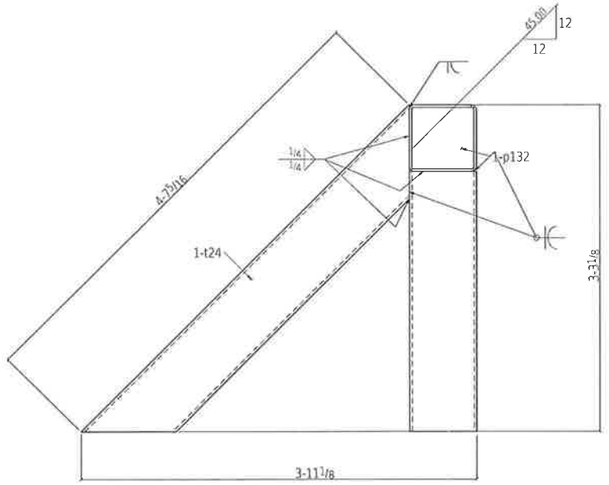

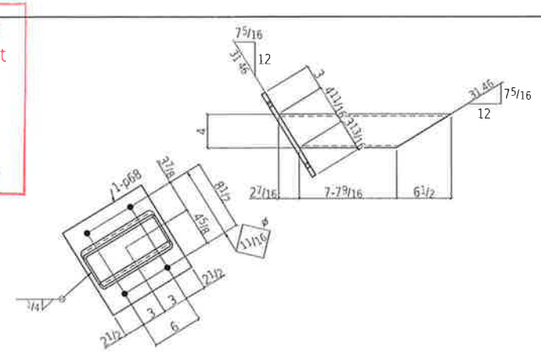

2 LIFT TOWER BRACES 605E

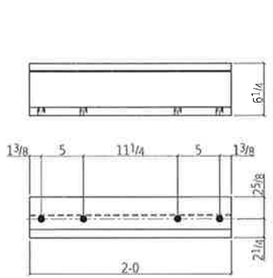

2 VERTICAL GUIDES 605F

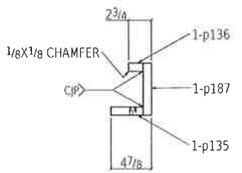

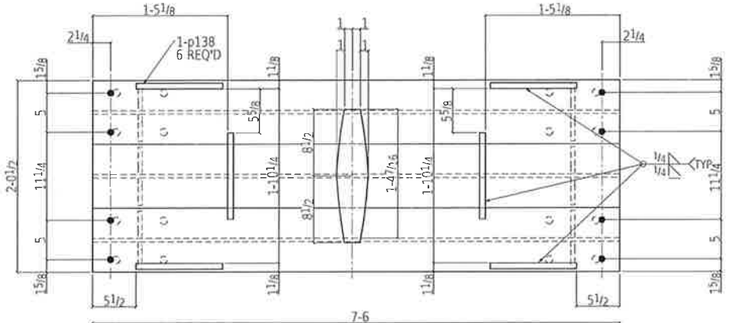

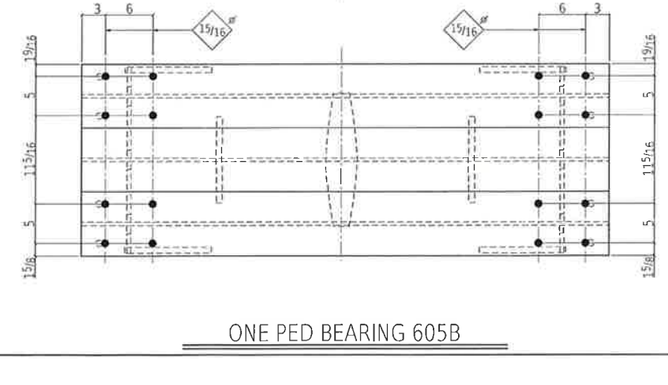

ONE PED BEARING 605B

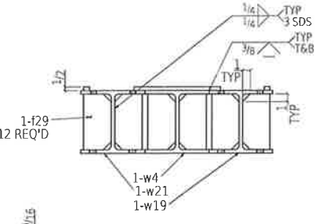

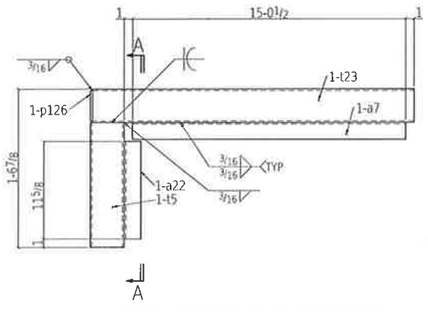

ONE SIDING SUPPORT 605C

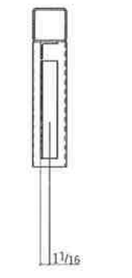

Section A-A
605C

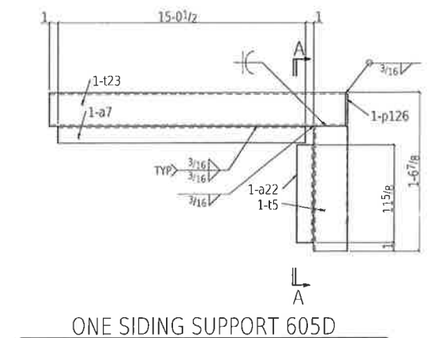

ONE SIDING SUPPORT 605D

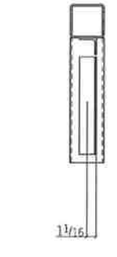

Section A-A
605D

Record Drawings have been reviewed by the Project Engineer, and represent to the best of my knowledge, the project as constructed.

PE _____ Date 12/10/15

State of Alaska
Dept. of Transportation and Public Facilities
Marine Facilities Engineering

CONTRACTOR SUBMITTAL REVIEW

Checking is only for conformance with the design concepts of the Project and compliance with the information given in the Contract Documents. The Contractor is responsible for dimensions to be confirmed and correlated at the job site for information that pertains solely to the fabrication process or to techniques of construction for coordination of the work of all trades.

ACCEPTED ✓
ACCEPTED AS NOTED _____
RETURNED FOR CORRECTION _____

02/09/2015 Tim Doggett
Date Design Engineer

BILL OF MATERIAL

QTY total	Piece Mark	QTY unit	Description	Length		Remarks	Weight Unit
ONE	605A		RAMP BEARING			HOT DIP GALVANIZE	1266
1	t13	1	HSS8x8x5/16	19	10 3/8	A500B	632
2	t24	2	HSS8x8x5/16	4	7 3/16	A500B	147
4	t8	4	HSS8x8x5/16	2	7 1/2	A500B	83
2	p132	2	PL 5/16x7 3/8	0	7 3/8	A36	5
ONE	605B		PED BEARING			HOT DIP GALVANIZE	917
1	w4	1	HP8X36	7	6	A992	270
1	w25	1	HP8X36	7	6	A992	270
1	w27	1	HP8X36	7	6	A992	270
1	p114	1	PL 3x4	1	5	A36	58
12	f29	12	FBO 1x3 1/2	0	7 1/16	A36	4
6	p138	6	PL 1/2x3/8	0	11	A36	1
			FIELD BOLTS				
16			1 Dia A325TC	0	2 1/2	+1HD WASH GALV	
ONE	605C		SIDING SUPPORT			HOT DIP GALVANIZE	198
1	t23	1	HSS6x6x5/16	15	6 1/4	A500B	146
1	t5	1	HSS6x6x5/16	1	7 1/8	A500B	12
1	a7	1	L2x2x3/16	15	0 1/2	A36	37
1	a22	1	L2x2x3/16	0	11 5/8	A36	2
1	p126	1	PL 3/16x3 5/8	0	3 5/8	A36	1
ONE	605D		SIDING SUPPORT			HOT DIP GALVANIZE	193
1	t23	1	HSS6x6x5/16	15	6 1/4	A500B	146
1	t5	1	HSS6x6x5/16	1	7 1/8	A500B	12
1	a7	1	L2x2x3/16	15	0 1/2	A36	37
1	a22	1	L2x2x3/16	0	11 5/8	A36	2
1	p126	1	PL 3/16x3 5/8	0	3 5/8	A36	1
2	605E		LIFT TOWER BRACE			HOT DIP GALVANIZE	206
2	605E	1	HSS10x6x1/4	8	4 9/16	A500B	183
2	p68	1	PL 1/2x13	0	11 1/2	A36	18
			FIELD BOLTS				
8			1 Dia A325TC	0	2 1/4	+1HD WASH GALV	
2	605F		VERTICAL GUIDE			HOT DIP GALVANIZE	81
2	p187	1	PL 1x6 1/4	2	0	A36	33
2	p135	1	PL 1x3 7/8	2	0	A36	26
2	p136	1	PL 1x1 3/4	2	0	A36	12
			FIELD BOLTS				
8			3/4 Dia A325TC	0	3	+1HVP 1HD WASH GALV	

Total weight: 3152

REV	DESCRIPTION	BY	CHK	DATE
D	FOR FABRICATION	MRH	KB	Jan 6 2015
A	FOR APPROVAL	MRH	KB	Oct 23 2014

FOR FABRICATION
Dave Hawkins 1-22-15

DETAILING
JOB: 2265
REF E1

FABRICATION TECHNICAL SERVICES, INC.
307 N. LINCOLN STE. B, POST FALLS, ID 83854
(208) 457-8282 fax: (208) 457-8208
EMAIL kevin@FTSsteeldetailing.com

HOLES DIA UNO: 13/16
SURF PREP SEE B.O.M.
FINISH: SEE B.O.M.

WELD 3/16 FILLET U.N.O. (E70XX)
W.P. (TAILS)
COL BASE PLATES ARE ALWAYS SECTION CUTS LOOKING DOWN

JESSE ENGINEERING CO.

1840 Marine View Drive, Tacoma, Washington 98422 Ph. 253-922-7433

TOLERANCES:
(UNLESS OTHERWISE SPECIFIED)
3 PLACE DECIMALS +/- .01
2 PLACE DECIMALS +/- .03
FRACTIONS +/- 1/16
ANGLES +/- 2 DEGREES
MACHINE FINISHES 125 ✓U.N.

PROJECT: IFA HOLLIS/CLARK BAY FERRY TERMINAL IMPROVEMENTS
CONTRACTOR: WESTERN MARINE CONSTRUCTION
DATE: 10-07-14
JOB NO: 203960
DESCRIPTION: INTERMEDIATE RAMP
DWG NO: 605

SHEET SIZE 24X36
07-17-16 PM
Jan 06 2015

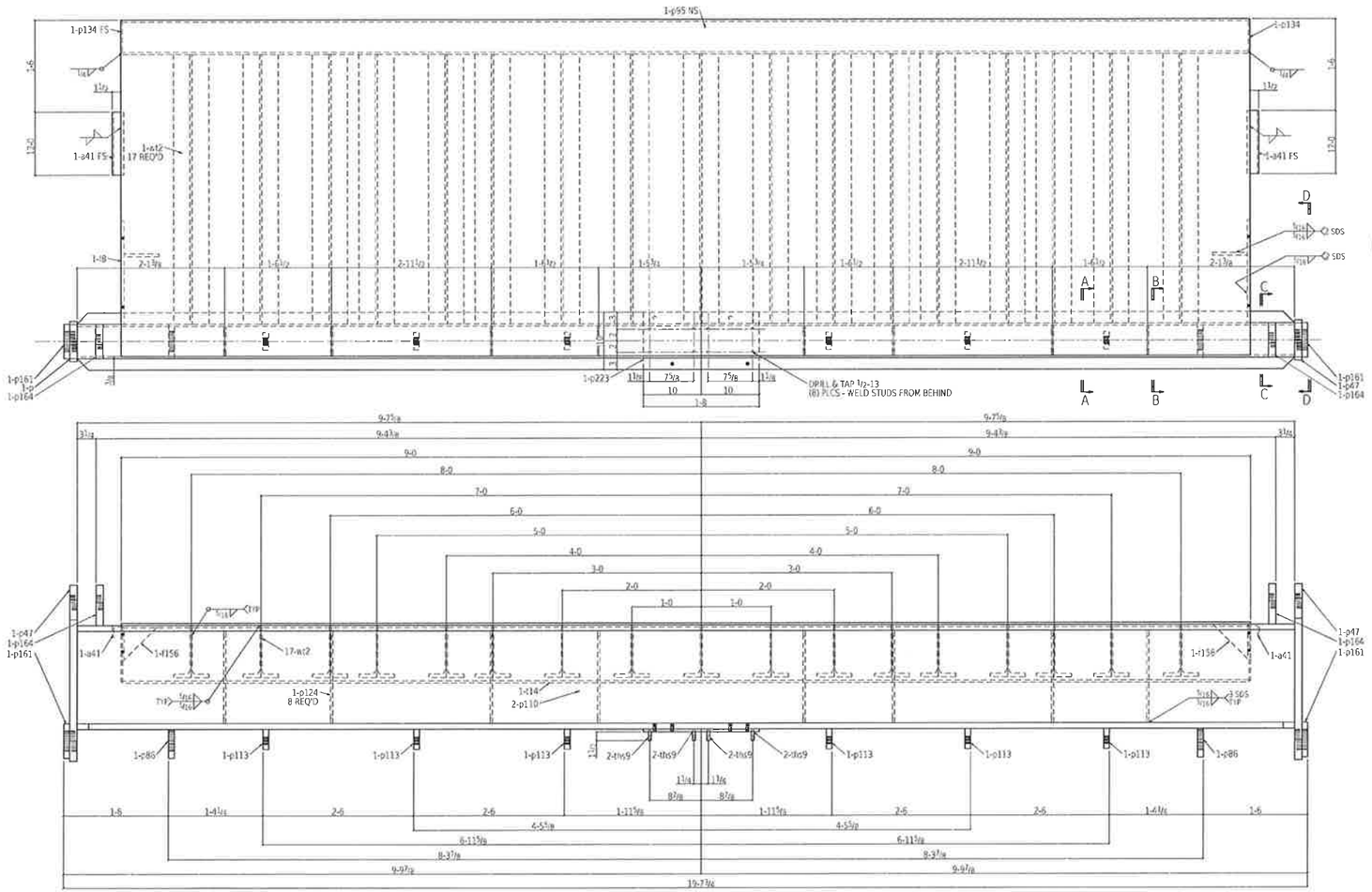

ONE INTERMEDIATE RAMP 606A

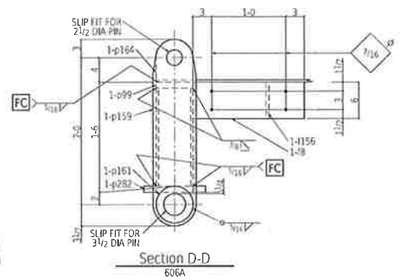

Section D-D
606A

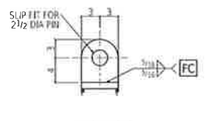

Section C-C
606A

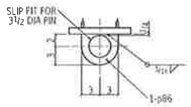

Section B-B
606A

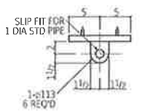

Section A-A
606A

BILL OF MATERIAL

QTY total	Piece Mark	QTY unit	Description	Length		Remarks	Weight Unit
ONE	FC6A		INTERMEDIATE RAMP			HOT DIP GALVANIZE	14126
1	f14	1	HSS10x6x3/8	17	11 1/2	A500 B	677
17	wt2	17	WT9x23	16	4	A709-50	376
2	a61	2	L2x2x1/4	12	0	A709-50	38
2	a47	2	PL1 1/4x7	2	6 1/2	A709-50 F2 F	76
2	p164	2	PL1 1/4x6	0	7	A709-50	15
1	p236	1	PL1x10	19	3 1/4	A709-50 F2 F	656
1	p99	1	PL1x6	19	3 1/4	A709-50	393
2	p96	2	PL1x5	0	6	A709-50	9
6	p113	6	PL1x3	0	3 1/2	A709-50	3
2	p161	2	PL1x6			A709-50	8
1	p223	1	PL 3/4x10	3	8	A709-50	28
2	f8	2	FBL 3/4x6	1	6	A709-50	15
2	f155	2	FBL 1/2x6	0	6	A709-50	5
1	p95	1	PL 3/4x207 5/16	18	0	A709-50	4769
1	p110	1	PL 3/8x16	19	3 1/4	A709-50 F2 F	393
1	p182	1	PL 3/8x16	19	3 1/4	A709-50 F2 F	393
8	p124	8	PL 3/8x5 1/4	1	4	A709-50	9
2	p134	2	PL 3/8x4 5/8	0	9 1/2	A709-50	4
8	thd9	8	3/4-13 STUD	0	3 3/16	A108	0
			FIELD BOLTS				
4			1/2 Dia A325TC	0	2 1/2	+1HD WASH	
8			3/4 Dia ELEV BOLT	0	3 1/2	+1HD WASH	

Total weight: 14126

REV	DESCRIPTION	BY	CHK	DATE
3	F ADDED ON p102 AND p182	MRH	KB	Feb 2 2015
2	FRACTURE CRITICAL SYMBOL ADDED TO BOM	MRH	KB	Jan 31 2015
1	REVISED TO SHOW FRACTURE CRITICAL	MRH	KB	Jan 23 2015
0	FOR FABRICATION	MRH	KB	Jan 6 2015
A	FOR APPROVAL	MRH	KB	Oct 23 2014

FOR FABRICATION
Dave Hankins 2-2-15

FC = FRACTURE CRITICAL WELD PER D1.5 SECTION 12
F = FRACTURE CRITICAL MATERIAL WELD PER D1.5.

State of Alaska
Dept. of Transportation and Public Facilities
Marine Facilities Engineering

CONTRACTOR SUBMITTAL REVIEW

Checking is only for conformance with the design concepts of the Project and compliance with the information given in the Contract Documents. The Contractor is responsible for dimensions to be confirmed and correlated at the job site for information that pertains solely to the fabrication process or to techniques of construction for coordination of the work of all trades.

ACCEPTED ✔
ACCEPTED AS NOTED
RETURNED FOR CORRECTION

02/09/2015 Tim Doggett
Date Design Engineer

Record Drawings have been reviewed by the Project Engineer, and represent to the best of my knowledge, the project as constructed.
PE _____ Date 12/10/15

DETAILING
JOB: 2265
REF: E1

FABRICATION TECHNICAL SERVICES, INC.
307 N. LINCOLN STE. B, POST FALLS, ID 83854
(208) 457-8282 fax (208) 457-8208
EMAIL: kevin@FTSsteeldetailing.com

HOLES DIA UNO 13/16
SURF PREP SEE B.O.M.
FINISH: SEE B.O.M.

WELD 3/16 FILLET U.N.O. (E70XX)
W.P. (TAILS)
COL BASE PLATES ARE ALWAYS SECTION CUTS LOOKING DOWN

TOLERANCES:
(UNLESS OTHERWISE SPECIFIED)
3 PLACE DECIMALS +/- .01
2 PLACE DECIMALS +/- .03
FRACTIONS +/- 1/16
ANGLES +/- 2 DEGREES
MACHINE FINISHES 125 √ U.N.

JESSE ENGINEERING CO.
1840 Marine View Drive, Tacoma, Washington 98422 Ph. 253-922-7433

PROJECT: IFA HOLLIS/CLARK BAY FERRY TERMINAL IMPROVEMENTS
CONTRACTOR: WESTERN MARINE CONSTRUCTION
DESCRIPTION: INTERMEDIATE RAMP
DATE: 10-07-14
JOB NO: 203960
DRG NO: 606

Feb 02 2015 08:13:19 AM SHEET SIZE 24X36

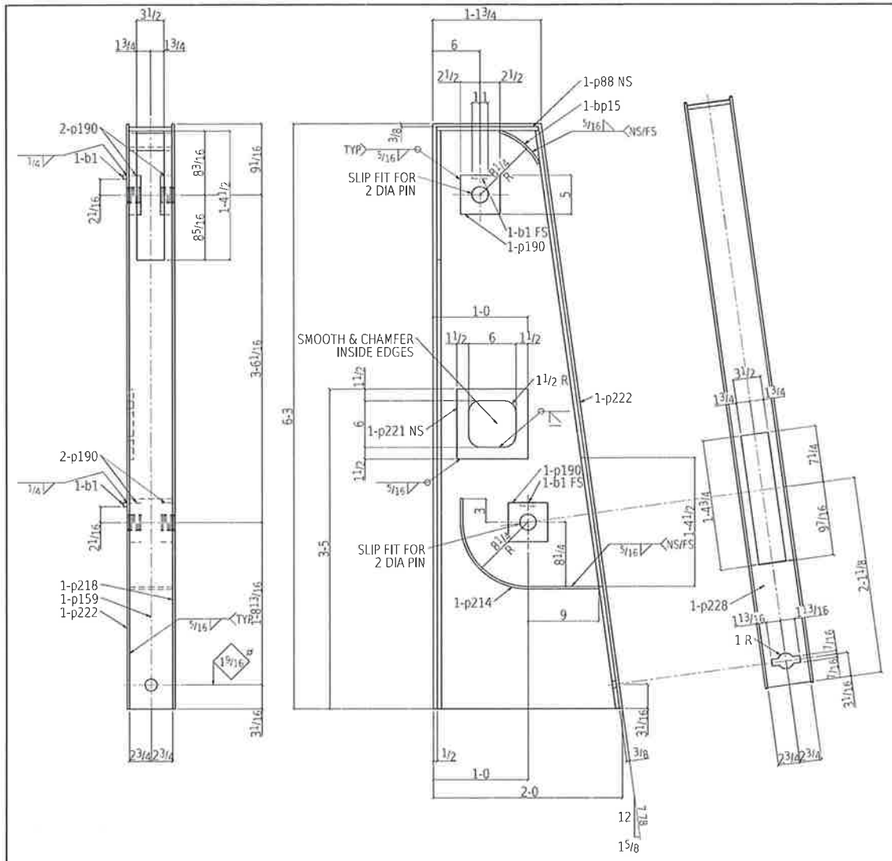

ONE APRON TOWER 607A

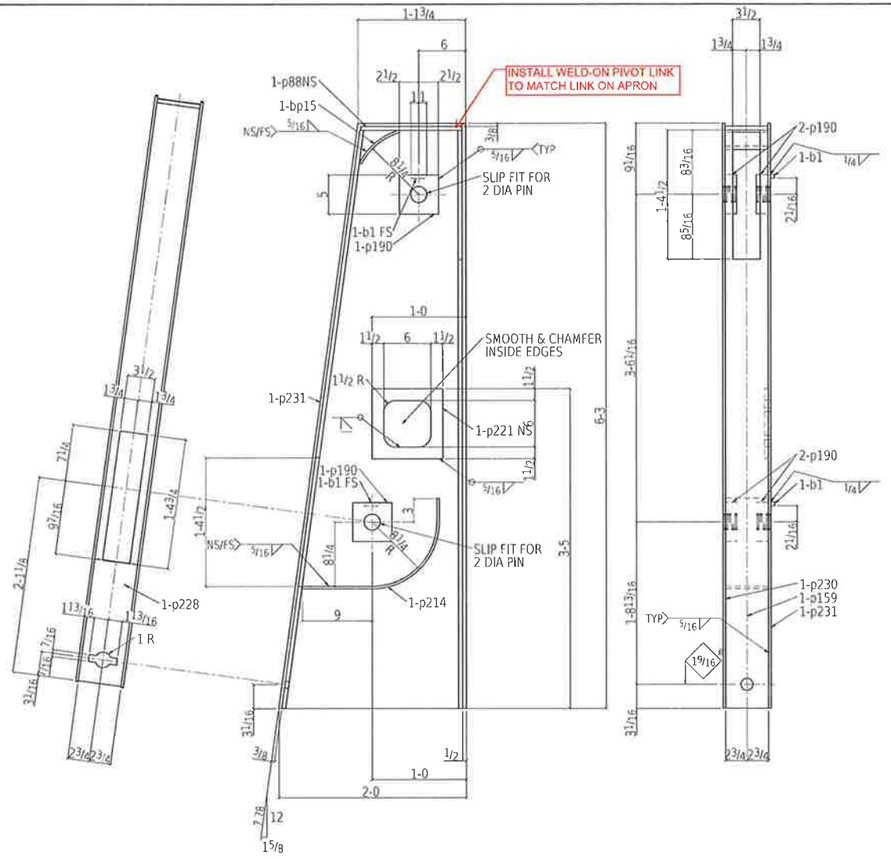

ONE APRON TOWER 607B

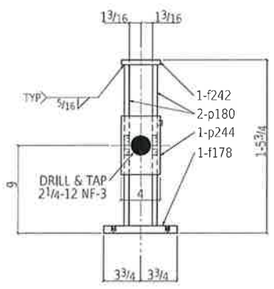

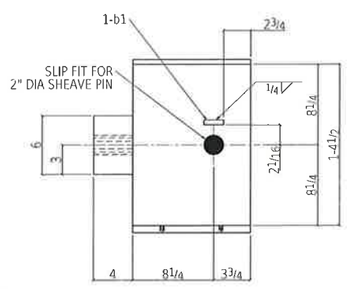

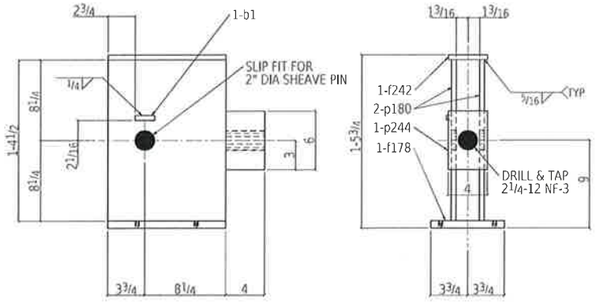

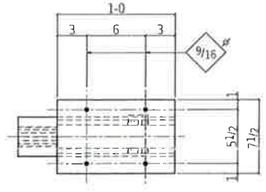

ONE SLIDE BLOCK 607C

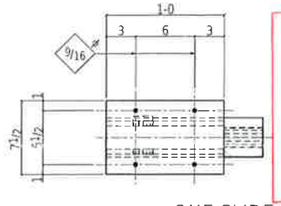

ONE SLIDE BLOCK 607D

BILL OF MATERIAL

QTY total	Piece Mark	QTY unit	Description	Length	Remarks	Weight Unit
ONE	607A		APRON TOWER		HOT DIP GALVANIZE	518
1	p214	1	PL 5 1/2 x 5/16	1 10 3/16	A36	11
4	p160	4	PL 1 1/2 x 5	0 5	A36	11
1	p221	1	PL 1/2 x 9	0 9	A36	11
1	p228	1	PL 1/2 x 5 1/2	6 2 3/16	A36	58
1	p159	1	PL 1/2 x 5 1/2	6 2 1/8	A36	58
1	p53	1	PL 1/2 x 5 1/2	1 0 7/8	A36	10
1	p218	1	PL 5/16 x 24	6 3	A36	160
1	p222	1	PL 5/16 x 24	6 3	A36	160
1	bp15	1	PL 5/16 x 15 1/16	0 5 1/2	BENT A36	7
2	b1	2	SQ2	0 0 1/2	A36	0
ONE	607B		APRON TOWER		HOT DIP GALVANIZE	518
1	p214	1	PL 5 1/2 x 5/16	1 10 3/16	A36	11
4	p160	4	PL 1 1/2 x 5	0 5	A36	11
1	p221	1	PL 1/2 x 9	0 9	A36	11
1	p228	1	PL 1/2 x 5 1/2	6 2 3/16	A36	58
1	p159	1	PL 1/2 x 5 1/2	6 2 1/8	A36	58
1	p53	1	PL 1/2 x 5 1/2	1 0 7/8	A36	10
1	p230	1	PL 5/16 x 24	6 3	A36	160
1	p231	1	PL 5/16 x 24	6 3	A36	160
1	bp15	1	PL 5/16 x 15 1/16	0 5 1/2	BENT A36	7
2	b1	2	SQ2	0 0 1/2	A36	0
ONE	607C		SLIDE BLOCK		HOT DIP GALVANIZE	103
1	p244	1	PL 4x4	0 6	A36	27
1	f165	1	FB 3/16 x 12	0 7 1/2	A36	19
2	p180	2	PL 1/2 x 12	1 4 1/2	A36	28
1	f242	1	FB 1/2 x 4	1 0	A36	7
1	b1	1	SQ2	0 0 1/2	A36	0
			FIELD BOLTS			
4			3/4 Dia ELEV BOLT	0 2 1/2	+1HD WASH	
ONE	607D		SLIDE BLOCK		HOT DIP GALVANIZE	103
1	p244	1	PL 4x4	0 6	A36	27
1	f165	1	FB 3/16 x 12	0 7 1/2	A36	19
2	p180	2	PL 1/2 x 12	1 4 1/2	A36	28
1	f242	1	FB 1/2 x 4	1 0	A36	7
1	b1	1	SQ2	0 0 1/2	A36	0
			FIELD BOLTS			
4			3/4 Dia ELEV BOLT	0 2 1/2	+1HD WASH	

Total weight 1254

REV	DESCRIPTION	BY	CHK	DATE
0	FOR FABRICATION	MRH	KB	Jan 6 2015
A	FOR APPROVAL	MRH	KB	Oct 23 2014

FOR FABRICATION
Dave Hankins 1-22-15

DETAILING:
JOB: 2265
REF: E1

FABRICATION TECHNICAL SERVICES, INC.
307 N. LINCOLN STE. B POST FALLS, ID 83854
(208) 457-8282 fax: (208) 457-8208
EMAIL: kevin@FTSsteeldetailing.com

HOLES DIA UNO 13/16
SURF PREP SEE B.O.M.
FINISH: SEE B.O.M.

WELD 3/16 FILLET U.N.O. (E70XX)
W.P. (TAILS)
COL BASE PLATES ARE ALWAYS SECTION CUTS LOOKING DOWN

JESSE ENGINEERING CO.
1840 Marine View Drive, Tacoma, Washington 98422 Ph. 253-922-7433

TOLERANCES:
(UNLESS OTHERWISE SPECIFIED)
3 PLACE DECIMALS +/- .01
2 PLACE DECIMALS +/- .03
FRACTIONS +/- 1/16
ANGLES +/- 2 DEGREES
MACHINE FINISHES 125 √ U.N.

PROJECT: IFA HOLLIS/CLARK BAY FERRY TERMINAL IMPROVEMENTS
CONTRACTOR: WESTERN MARINE CONSTRUCTION
DATE: 10-07-14
JOB NO: 203960
DESCRIPTION: INTERMEDIATE RAMP
DWG NO: 607

State of Alaska
Dept. of Transportation and Public Facilities
Marine Facilities Engineering

CONTRACTOR SUBMITTAL REVIEW

Checking is only for conformance with the design concepts of the Project and compliance with the information given in the Contract Documents. The Contractor is responsible for dimensions to be confirmed and correlated at the job site for information that pertains solely to the fabrication process or to techniques of construction for coordination of the work of all trades.

ACCEPTED
ACCEPTED AS NOTED ✓
RETURNED FOR CORRECTION
02/09/2015 Tim Doggett
Date Design Engineer

Record Drawings have been reviewed by the Project Engineer, and represent to the best of my knowledge, the project as constructed.
PE _____ Date 12/10/15

SHEET SIZE 24X36
07:11:11 PM
Jan 06 2015

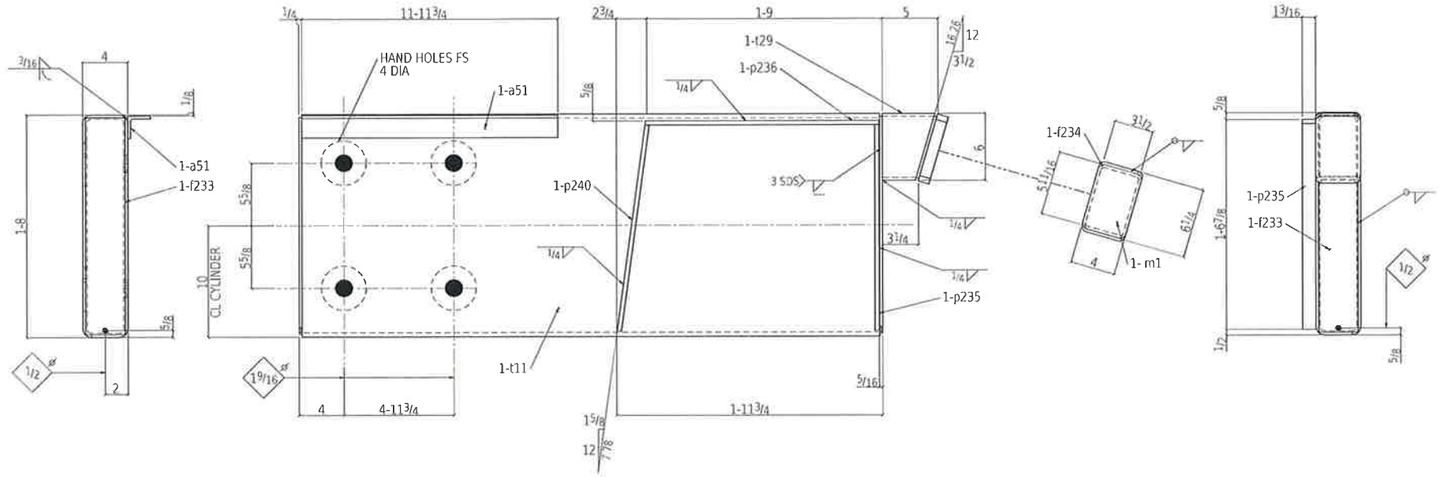

ONE CURB 608A

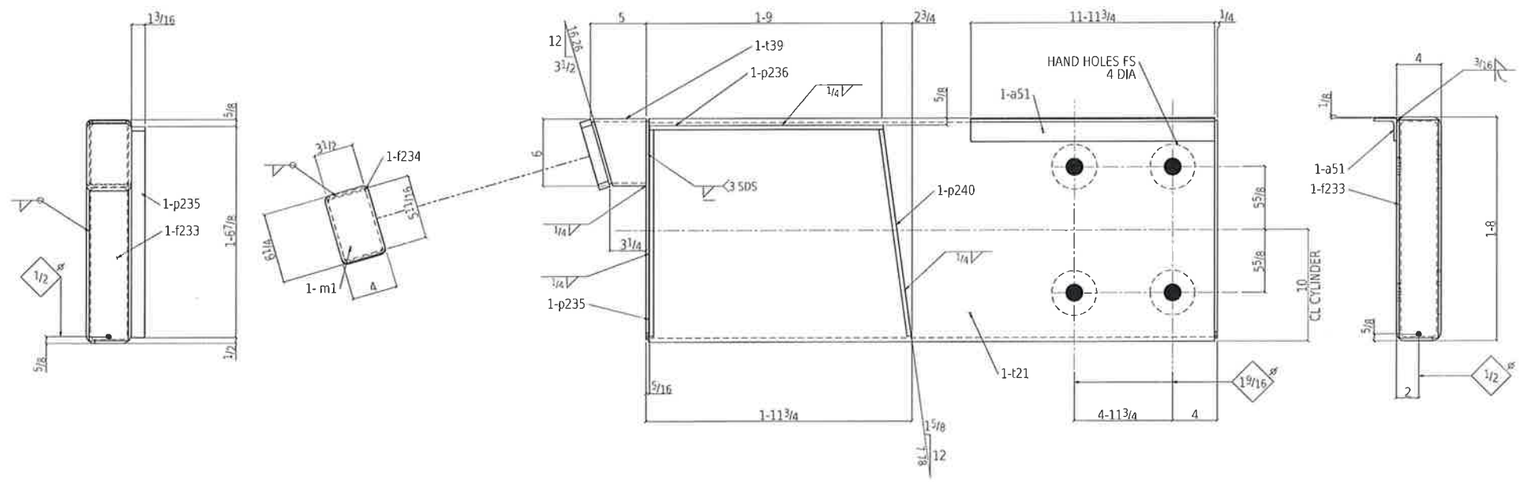

ONE CURB 608B



4 CYLINDER STOPS 608C

BILL OF MATERIAL

QTY total	Piece Mark	QTY unit	Description	Length	Remarks	Weight Unit
ONE	608A		CURB		HOT DIP GALVANIZE	982
1	t15	1	HSS20x8x3/8	15 9 1/2	A500B	917
1	t29	1	HSS6x6x1/4	0 4 3/4	A500B	6
1	a51	1	L2x2x1/4	11 11 3/4	A36	38
1	m1	1	1" NEOPRENE PAD	0 4	3 #s	2
1	p171	1	PL3/8x13/16	1 8 13/16	A36	3
1	p175	1	PL3/8x13/16	1 6 5/8	A36	2
1	p169	1	PL3/8x13/16	1 6 1/2	A36	2
2	f233	2	FBU6x3/12	1 7 1/2	A36	5
1	f234	1	FBU6x3/12	0 5 3/4	A36	1
ONE	608B		CURB		HOT DIP GALVANIZE	982
1	t18	1	HSS20x8x3/8	15 9 1/2	A500B	917
1	t39	1	HSS6x6x1/4	0 4 3/4	A500B	6
1	a51	1	L2x2x1/4	11 11 3/4	A36	38
1	m1	1	1" NEOPRENE PAD	0 4	3 #s	2
1	p171	1	PL3/8x13/16	1 8 13/16	A36	3
1	p175	1	PL3/8x13/16	1 6 5/8	A36	2
1	p169	1	PL3/8x13/16	1 6 1/2	A36	2
2	f233	2	FBU6x3/12	1 7 1/2	A36	5
1	f234	1	FBU6x3/12	0 5 3/4	A36	1
4	608C		CYLINDER STOP			4
4	b3	1	SQ1 1/2	0 6	A36	4

Total weight 1980

REV	DESCRIPTION	BY	CHK	DATE
D	FOR FABRICATION	MRH	KB	Jan 6 2015
A	FOR APPROVAL	MRH	KB	Oct 23 2014

FOR FABRICATION
Dave Hankins 1-22-15

DETAILING:
JOB: 2265
REF E1

FABRICATION TECHNICAL SERVICES, INC.
307 N. LINCOLN STE. B, POST FALLS, ID 83854
(208) 457-8282 fax: (208) 457-8208
EMAIL: kevin@FTSsteeldetailing.com

HOLES DIA UNO: 13/16
SURF PREP SEE B.O.M.
FINISH: SEE B.O.M.

WELD 3/16 FILLET U.N.O. (E70XX)
W.P. (TAILS)
COL BASE PLATES ARE ALWAYS SECTION CUTS LOOKING DOWN

JESSE ENGINEERING CO.
1840 Marine View Drive, Tacoma, Washington 98422 Ph. 253-922-7433

TOLERANCES:
(UNLESS OTHERWISE SPECIFIED)
3 PLACE DECIMALS +/- .01
2 PLACE DECIMALS +/- .03
FRACTIONS +/- 1/16
ANGLES +/- 2 DEGREES
MACHINE FINISHES 125 √ U.N.

PROJECT: IFA HOLLIS/CLARK BAY FERRY TERMINAL IMPROVEMENTS
CONTRACTOR: WESTERN MARINE CONSTRUCTION
DESCRIPTION: INTERMEDIATE RAMP
DATE: 10-07-14
JOB NO: 203960
DWG NO: 608

State of Alaska
Dept. of Transportation and Public Facilities
Marine Facilities Engineering

CONTRACTOR SUBMITTAL REVIEW

Checking is only for conformance with the design concepts of the Project and compliance with the information given in the Contract Documents. The Contractor is responsible for dimensions to be confirmed and correlated at the job site for information that pertains solely to the fabrication process or to techniques of construction for coordination of the work of all trades.

ACCEPTED ✓
ACCEPTED AS NOTED
RETURNED FOR CORRECTION
02/09/2015 Tim Doggett
Date Design Engineer

Record Drawings have been reviewed by the Project Engineer, and represent to the best of my knowledge, the project as constructed.
PE _____ Date 12/10/15

SHEET SIZE 24X36
06:37:42 PM
Jan 06 2015

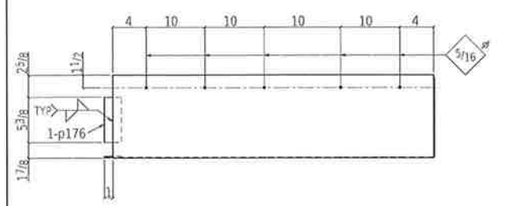

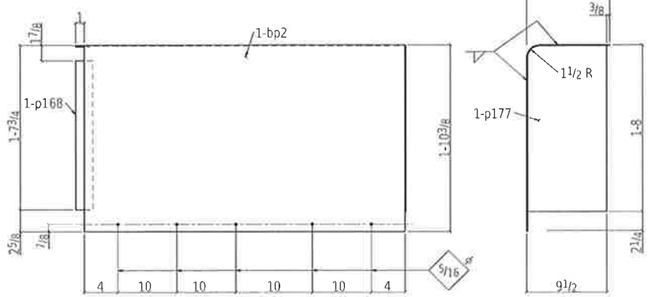

ONE CYLINDER COVER 609A

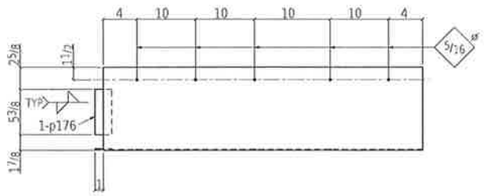

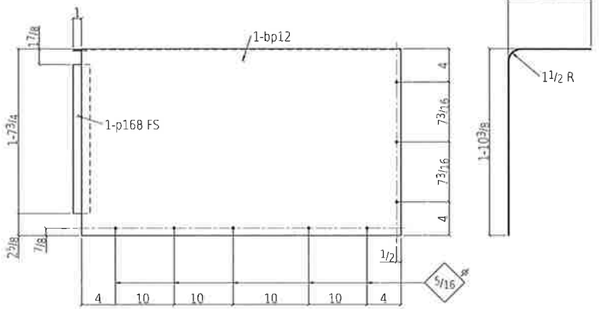

ONE CYLINDER COVER 609B

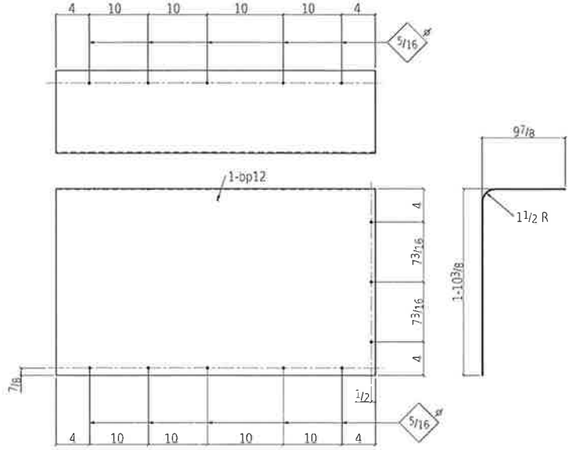

ONE CYLINDER COVER 609C

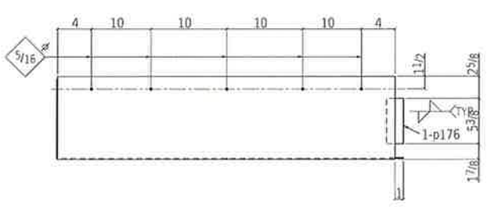

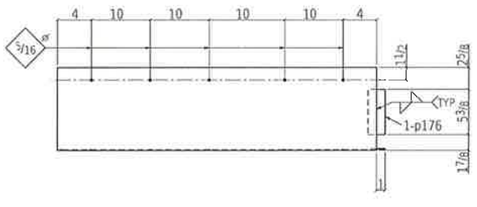

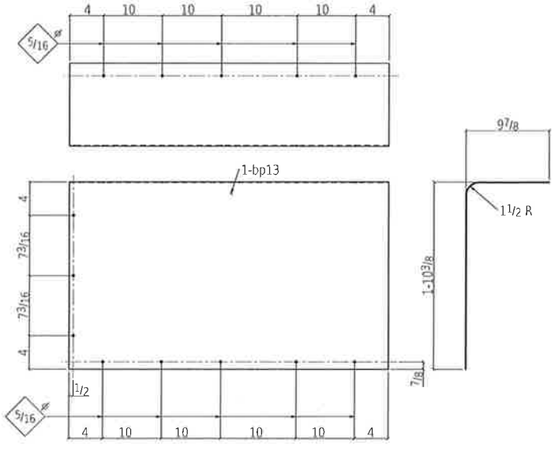

ONE CYLINDER COVER 609F

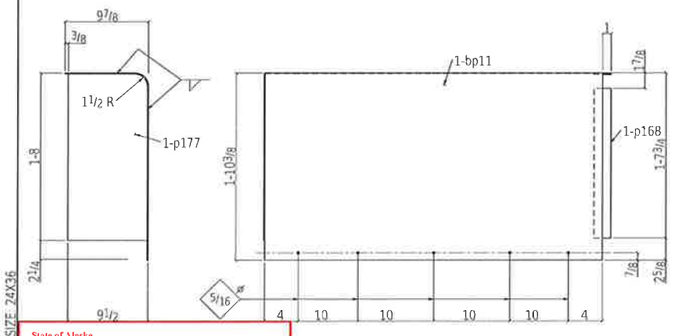

ONE CYLINDER COVER 609D

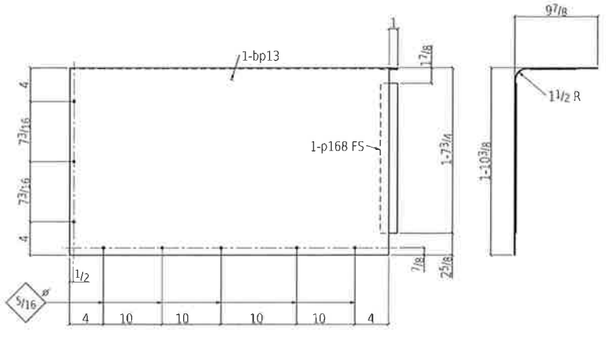

ONE CYLINDER COVER 609E

BILL OF MATERIAL

QTY total	Piece Mark	QTY unit	Description	Length		Remarks	Weight Unit
ONE	609A		CYLINDER COVER			HOT DIP GALVANIZE	52
1	bp2	1	PL12GAv31½	4	0	BENT A36	45
1	p177	1	PL12GAv9⅜	1	7⅞	A36	6
1	p168	1	PL12GAv2	1	5⅞	A36	1
1	p176	1	PL12GAv2	0	5⅜	A36	0
			FIELD BOLTS				
15		15	¾ HEX WASHER HEAD SS TEK	0	0¾	410 SS	
ONE	609B		CYLINDER COVER			HOT DIP GALVANIZE	46
1	bp12	1	PL12GAv31½	4	0	BENT A36	45
1	p168	1	PL12GAv2	1	5⅞	A36	1
1	p176	1	PL12GAv2	0	5⅜	A36	0
			FIELD BOLTS				
15		15	¾ HEX WASHER HEAD SS TEK	0	0¾	410 SS	
ONE	609C		CYLINDER COVER			HOT DIP GALVANIZE	45
1	bp12	1	PL12GAv31½	4	0	BENT A36	45
			FIELD BOLTS				
15		15	¾ HEX WASHER HEAD SS TEK	0	0¾	410 SS	
ONE	609D		CYLINDER COVER			HOT DIP GALVANIZE	52
1	bp11	1	PL12GAv31½	4	0	BENT A36	45
1	p177	1	PL12GAv9⅜	1	7⅞	A36	6
1	p168	1	PL12GAv2	1	5⅞	A36	1
1	p176	1	PL12GAv2	0	5⅜	A36	0
			FIELD BOLTS				
15		15	¾ HEX WASHER HEAD SS TEK	0	0¾	410 SS	
ONE	609E		CYLINDER COVER			HOT DIP GALVANIZE	46
1	bp13	1	PL12GAv31½	4	0	BENT A36	45
1	p168	1	PL12GAv2	1	5⅞	A36	1
1	p176	1	PL12GAv2	0	5⅜	A36	0
			FIELD BOLTS				
15		15	¾ HEX WASHER HEAD SS TEK	0	0¾	410 SS	
ONE	609F		CYLINDER COVER			HOT DIP GALVANIZE	45
1	bp13	1	PL12GAv31½	4	0	BENT A36	45
			FIELD BOLTS				
15		15	¾ HEX WASHER HEAD SS TEK	0	0¾	410 SS	

Total weight 286

REV	DESCRIPTION	BY	CHK	DATE
0	FOR FABRICATION	MRH	KB	Jan 6 2015
A	FOR APPROVAL	MRH	KB	Oct 23 2014

DETAILING
JOB: 2265
REF: E1

FABRICATION TECHNICAL SERVICES, INC.
307 N. LINCOLN STE. B, POST FALLS, ID 83854
(208) 457-8282 fax: (208) 457-8208
EMAIL: kevin@FTSsteeldetailing.com

HOLES DIA UNO. 13/16
SURF PREP SEE B.O.M.
FINISH: SEE B.O.M.

WELD 3/16 FILLET U.N.O. (E70XX)
W.P. (TAILS)
COL BASE PLATES ARE ALWAYS SECTION CUTS LOOKING DOWN

SHEET SIZE: 24X36

State of Alaska
Dept. of Transportation and Public Facilities
Marine Facilities Engineering

CONTRACTOR SUBMITTAL REVIEW

Checking is only for conformance with the design concepts of the Project and compliance with the information given in the Contract Documents. The Contractor is responsible for dimensions to be confirmed and correlated at the job site for information that pertains solely to the fabrication process or to techniques of construction for coordination of the work of all trades.

ACCEPTED ✔
ACCEPTED AS NOTED
RETURNED FOR CORRECTION
02/09/2015 Tim Doggett
Date Design Engineer

Jan 06 2015 06:37:43 PM

Record Drawings have been reviewed by the Project Engineer, and represent to the best of my knowledge, the project as constructed.
PE Date 12/10/15

FOR FABRICATION
Dave Hankins 1-22-15

TOLERANCES:
(UNLESS OTHERWISE SPECIFIED)
3 PLACE DECIMALS +/- .01
2 PLACE DECIMALS +/- .03
FRACTIONS +/- 1/16
ANGLES +/- 2 DEGREES
MACHINE FINISHES 125 ✓U.N.

JESSE ENGINEERING CO.
1840 Marine View Drive, Tacoma, Washington 98422 Ph. 253-922-7433

PROJECT: IFA HOLLIS/CLARK BAY FERRY TERMINAL IMPROVEMENTS
CONTRACTOR: WESTERN MARINE CONSTRUCTION
DESCRIPTION: INTERMEDIATE RAMP
DATE: 10-07-14
JOB NO: 203960
DWG NO: 609

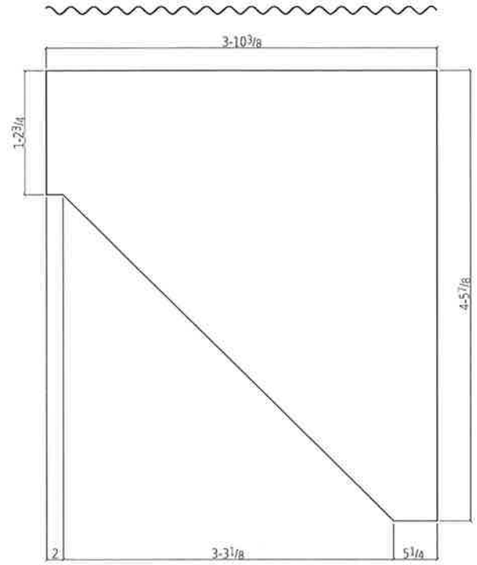

2 SIDING PANELS 610A

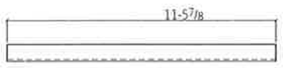

2 SIDING SUPPORTS 610D



2 SIDING SUPPORTS 610E

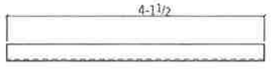

2 SIDING SUPPORTS 610F

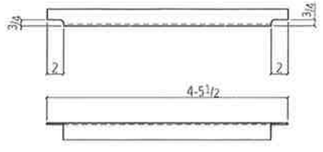

2 ACCESS DOOR JAMBS 610G

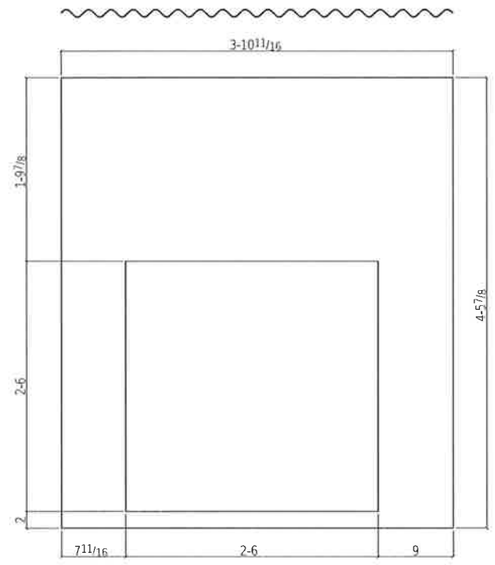

ONE SIDING PANEL 610B

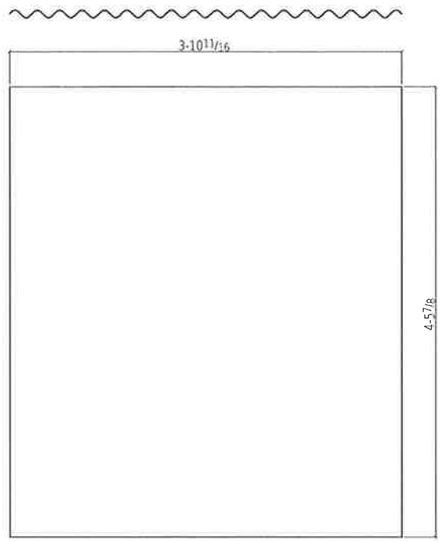

5 SIDING PANELS 610C



ONE ACCESS DOOR HEADER 610K

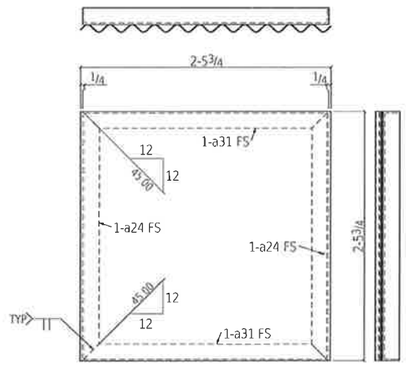

ONE ACCESS DOOR 610H

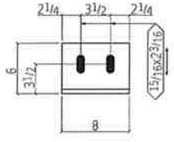

16 HOLD DOWN CLIPS 610J

BILL OF MATERIAL

QTY total	Piece Mark	QTY unit	Description	Length		Remarks	Weight Unit
2	610A		SIDING PANEL			PRE-GALVANIZED	11
2	m28	1	24 GA CORR SIDING	4	8 13/16	3 rsl	11
			FIELD BOLTS				
30		15	1/4 HEX WASHER HEAD SS TEK	0	3	WITH RUBBER GASKET 410 SS	
ONE	610B		SIDING PANEL			PRE-GALVANIZED	11
1	610B	1	24 GA CORR SIDING	4	6 3/16	3 rsl	11
			FIELD BOLTS				
15		15	1/4 HEX WASHER HEAD SS TEK	0	3	WITH RUBBER GASKET 410 SS	
5	610C		SIDING PANEL			PRE-GALVANIZED	16
5	m18	1	24 GA CORR SIDING	4	9 3/16	3 rsl	16
			FIELD BOLTS				
75		15	1/4 HEX WASHER HEAD SS TEK	0	3	WITH RUBBER GASKET 410 SS	
2	610D		SIDING SUPPORT			HOT DIP GALVANIZE	28
2	610D	1	L2x2x3/16	11	5 7/8	A36	28
2	610E		SIDING SUPPORT			HOT DIP GALVANIZE	11
2	610E	1	L2x2x3/16	4	7 3/8	A36	11
2	610F		SIDING SUPPORT			HOT DIP GALVANIZE	10
2	610F	1	L2x2x3/16	4	1 1/2	A36	10
2	610G		ACCESS DOOR JAMB			HOT DIP GALVANIZE	11
2	610G	1	L2x2x3/16	4	5 1/2	A36	11
ONE	610H		ACCESS DOOR			HOT DIP GALVANIZE	30
1	m31	1	24 GA CORR SIDING	3	0 5/8	3 rsl	6
2	a24	2	L2x2x3/16	2	5 3/8	A36	6
2	a31	2	L2x2x3/16	2	5 3/8	A36	6
			DOOR HARDWARE				
2		2	BY FABRICATOR			HINGE	
1		1	BY FABRICATOR			LATCH	
			FIELD BOLTS				
8		8	1/4 HEX WASHER HEAD SS TEK	0	3	WITH RUBBER GASKET 410 SS	
16	610I		HOLD DOWN CLIP			HOT DIP GALVANIZE	13
16	610I	1	L6x6x1/2	0	8	A36	13
			FIELD BOLTS				
32			3/4 Dia A325TC	0	2 1/2	+1FL WASH CAUV	
ONE	610K		ACCESS DOOR HEADER			HOT DIP GALVANIZE	6
1	610K	1	L2x2x3/16	2	6	A36	6

Total weight 480

REV	DESCRIPTION	BY	CHK	DATE
0	FOR FABRICATION	MRH	KB	Jan 6 2015
A	FOR APPROVAL	MRH	KB	Oct 23 2014

FOR FABRICATION
Dave Hankins 1-22-15

Record Drawings have been reviewed by the Project Engineer, and represent to the best of my knowledge, the project as constructed.
PE _____ Date 12/10/15

State of Alaska
Dept. of Transportation and Public Facilities
Marine Facilities Engineering

CONTRACTOR SUBMITTAL REVIEW

Checking is only for conformance with the design concepts of the Project and compliance with the information given in the Contract Documents. The Contractor is responsible for dimensions to be confirmed and correlated at the job site for information that pertains solely to the fabrication process or to techniques of construction for coordination of the work of all trades.

ACCEPTED ✔
ACCEPTED AS NOTED
RETURNED FOR CORRECTION
02/09/2015 Tim Doggett
Date Design Engineer

DETAILING:
JOB: 2265
REF E1

FABRICATION TECHNICAL SERVICES, INC.
307 N. LINCOLN STE. B. POST FALLS, ID 83854
(208) 457-8282 fax (208) 457-8208
EMAIL kevin@FTSsteeldetailing.com

HOLES DIA UNO: 13/16
SURF PREP SEE B.O.M.
FINISH: SEE B.O.M.

WELD 3/16 FILLET U.N.O. (E70XX)
W.P. (TAILS)
COL BASE PLATES ARE ALWAYS SECTION CUTS LOOKING DOWN

JESSE ENGINEERING CO.
1840 Marine View Drive, Tacoma, Washington 98422 Ph. 253-922-7433

TOLERANCES:
(UNLESS OTHERWISE SPECIFIED)
3 PLACE DECIMALS +/- .01
2 PLACE DECIMALS +/- .03
FRACTIONS +/- 1/16
ANGLES +/- 2 DEGREES
MACHINE FINISHES 125 ✓U.N.

PROJECT
IFA HOLLIS/CLARK BAY
FERRY TERMINAL IMPROVEMENTS
CONTRACTOR
WESTERN MARINE CONSTRUCTION
DESCRIPTION
INTERMEDIATE RAMP
DATE 10-07-14
JOB NO 203960
DWG NO 610

Jan 17 2015 09:42:50 AM SHEET SIZE: 24X36

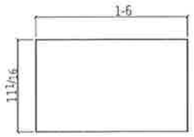

ONE ELASTOMERIC PAD 611A

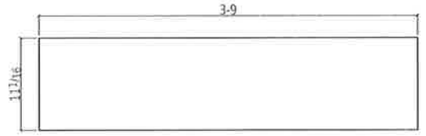

2 ELASTOMERIC PADS 611B

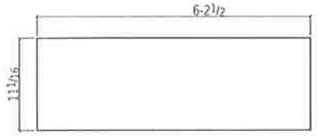

2 ELASTOMERIC PADS 611C

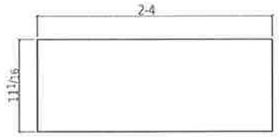

ONE ELASTOMERIC PAD 611D

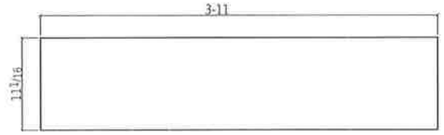

ONE ELASTOMERIC PAD 611E

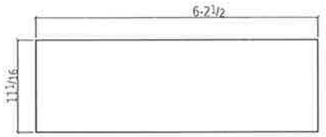

ONE ELASTOMERIC PAD 611F

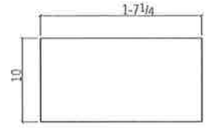

8 ELASTOMERIC PADS 312C..

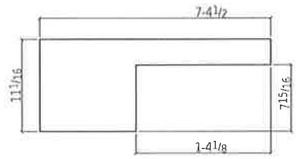

ONE ELASTOMERIC PAD 611H



ONE ELASTOMERIC PAD 611J

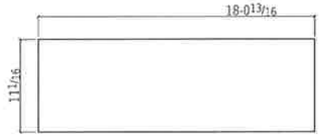

2 ELASTOMERIC PADS 611K

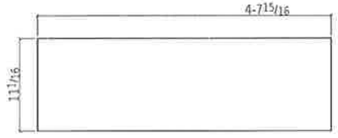

ONE ELASTOMERIC PAD 611L

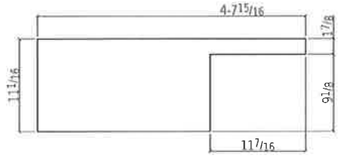

ONE ELASTOMERIC PAD 611M

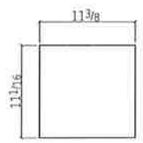

ONE ELASTOMERIC PAD 611N

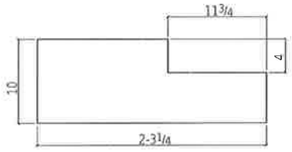

4 ELASTOMERIC PADS 611P

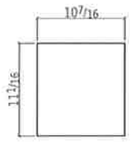

ONE ELASTOMERIC PAD 611R

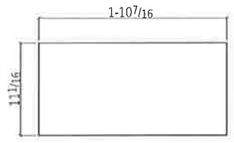

ONE ELASTOMERIC PAD 611S

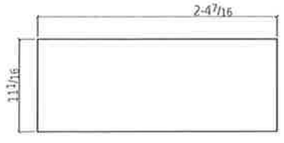

ONE ELASTOMERIC PAD 611T



ONE ELASTOMERIC PAD 611U

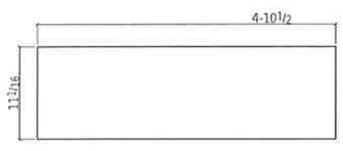

ONE ELASTOMERIC PAD 611V

BILL OF MATERIAL

QTY total	Piece Mark	QTY unit	Description	Length	Remarks	Weight Unit
ONE	611A		ELASTOMERIC PAD		NO FINISH	9
1	611A	1	1/2"	0 11 1/16	3 KSI	9
2	611B		ELASTOMERIC PAD		NO FINISH	22
2	m20	1	1/2"	0 11 1/16	3 KSI	22
2	611C		ELASTOMERIC PAD		NO FINISH	36
2	611C	1	1/2"	0 11 1/16	3 KSI	36
ONE	611D		ELASTOMERIC PAD		NO FINISH	13
1	611D	1	1/2"	0 11 1/16	3 KSI	13
ONE	611E		ELASTOMERIC PAD		NO FINISH	23
1	611E	1	1/2"	0 11 1/16	3 KSI	23
ONE	611F		ELASTOMERIC PAD		NO FINISH	36
1	611F	1	1/2"	0 11 1/16	3 KSI	35
8	312C		ELASTOMERIC PAD		NO FINISH	8
8	611G	1	1/2"	0 10	3 KSI	8
ONE	611H		ELASTOMERIC PAD		NO FINISH	37
1	611H	1	1/2"	0 11 1/16	3 KSI	37
ONE	611J		ELASTOMERIC PAD		NO FINISH	38
1	611J	1	1/2"	0 11 1/16	3 KSI	38
2	611K		ELASTOMERIC PAD		NO FINISH	104
2	611K	1	1/2"	18 0 13/16	3 KSI	104
ONE	611L		ELASTOMERIC PAD		NO FINISH	27
1	611L	1	1/2"	4 7 15/16	3 KSI	27
ONE	611M		ELASTOMERIC PAD		NO FINISH	22
1	611M	1	1/2"	4 7 15/16	3 KSI	22
ONE	611N		ELASTOMERIC PAD		NO FINISH	5
1	611N	1	1/2"	0 11 3/8	3 KSI	5
4	611P		ELASTOMERIC PAD		NO FINISH	10
4	611P	1	1/2"	0 10	3 KSI	10
ONE	611R		ELASTOMERIC PAD		NO FINISH	5
1	611R	1	1/2"	0 10 7/16	3 KSI	5
ONE	611S		ELASTOMERIC PAD		NO FINISH	11
1	611S	1	1/2"	1 10 7/16	3 KSI	11
ONE	611T		ELASTOMERIC PAD		NO FINISH	14
1	611T	1	1/2"	2 4 7/16	3 KSI	14
ONE	611U		ELASTOMERIC PAD		NO FINISH	95
1	611U	1	1/2"	17 6	3 KSI	95
ONE	611V		ELASTOMERIC PAD		NO FINISH	28
1	611V	1	1/2"	4 10 1/2	3 KSI	28

Total weight 790

REV	DESCRIPTION	BY	CHK	DATE
0	FOR FABRICATION	MRH	KR	Jan 6 2015
A	FOR APPROVAL	MRH	KR	Oct 23 2014

DETAILING
JOB: 2265
REF: E1

FABRICATION TECHNICAL SERVICES, INC.
307 N. LINCOLN STE. B, POST FALLS, ID 83854
(208) 457-8282 fax: (208) 457-8208
EMAIL: kevin@FTSsteeldetailing.com

HOLES DIA UNO: 13/16
SURF PREP: SEE B.O.M.
FINISH: SEE B.O.M.

WELD 3/16 FILLET U.N.O. (E70XX)
W.P. (TAILS)
COL BASE PLATES ARE ALWAYS SECTION CUTS LOOKING DOWN

Record Drawings have been reviewed by the Project Engineer, and represent to the best of my knowledge, the project as constructed.
PE _____ Date 12/10/15

FOR FABRICATION
Dave Hankins 1-22-15

TOLERANCES:
(UNLESS OTHERWISE SPECIFIED)
3 PLACE DECIMALS +/- .01
2 PLACE DECIMALS +/- .03
FRACTIONS +/- 1/16
ANGLES +/- 2 DEGREES
MACHINE FINISHES 125 √ U.N.

JESSE ENGINEERING CO.
1840 Marine View Drive, Tacoma, Washington 98422 Ph. 253-922-7433

PROJECT: IFA HOLLIS/CLARK BAY FERRY TERMINAL IMPROVEMENTS
CONTRACTOR: WESTERN MARINE CONSTRUCTION
DESCRIPTION: INTERMEDIATE RAMP
DATE: 10-07-14
JOB NO: 203960
DWG NO: 611

Jan 06 2015 06:37:44 PM SHEET SIZE: 24X36

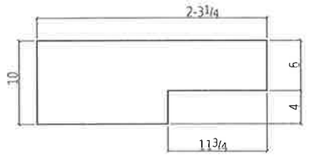

4 ELASTOMERIC PADS 612A

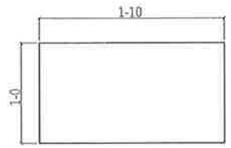

2 ELASTOMERIC PADS 612B

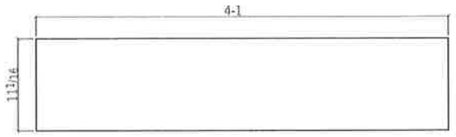

3 ELASTOMERIC PADS 612C

BILL OF MATERIAL

QTY total	Piece Mark	QTY unit	Description	Length	Remarks	Weight Unit
4	612A		ELASTOMERIC PAD		HD FINISH	10
4	612A	1	1/2"	0 10	3 KSI	10
2	612B		ELASTOMERIC PAD			92
2	612B	1	4"	1 0	3 KSI	92
3	612C		ELASTOMERIC PAD		HD FINISH	23
3	m23	1	1/2"	4 1	3 KSI	23

Total weight 293

REV	DESCRIPTION	BY	CHK	DATE
D	FOR FABRICATION	MPH	KB	Jan 6 2015
A	FOR APPROVAL	MPH	KB	Oct 23 2014

FOR FABRICATION
Dave Hankins 1-22-15

Record Drawings have been reviewed by the Project Engineer, and represent to the best of my knowledge, the project as constructed.
PE _____ Date 12/10/15

DETAILING:
JOB: 2265
REF E1

FABRICATION TECHNICAL SERVICES, INC.
307 N. LINCOLN STE. B, POST FALLS ID 83854
(208) 457-8282 fax: (208) 457-8208
EMAIL: kevin@FTSsteeldetailing.com

HOLES DIA UNO: 13/16
SURF PREP SEE B.O.M.
FINISH: SEE B.O.M.

WELD 3/16 FILLET U.N.O. (E70XX)
W.P. (TAILS)
COL BASE PLATES ARE ALWAYS SECTION CUTS LOOKING DOWN

JESSE ENGINEERING CO.
1640 Marine View Drive, Tacoma, Washington 98422 Ph. 253-922-7433

TOLERANCES:
(UNLESS OTHERWISE SPECIFIED)
3 PLACE DECIMALS +/- .01
2 PLACE DECIMALS +/- .03
FRACTIONS +/- 1/16
ANGLES +/- 2 DEGREES
MACHINE FINISHES 125 √U.N.

PROJECT: IFA HOLLIS/CLARK BAY FERRY TERMINAL IMPROVEMENTS
CONTRACTOR: WESTERN MARINE CONSTRUCTION
DESCRIPTION: INTERMEDIATE RAMP
DATE: 10-07-14
JOB NO: 203960
DWG NO: 612

Jan 06 2015 06:37:44 PM SHEET SIZE: 24X36

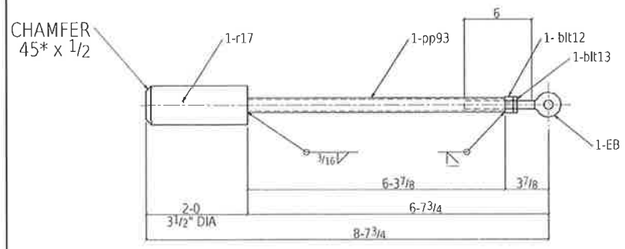

2 LOCK-OFF PINS 614A

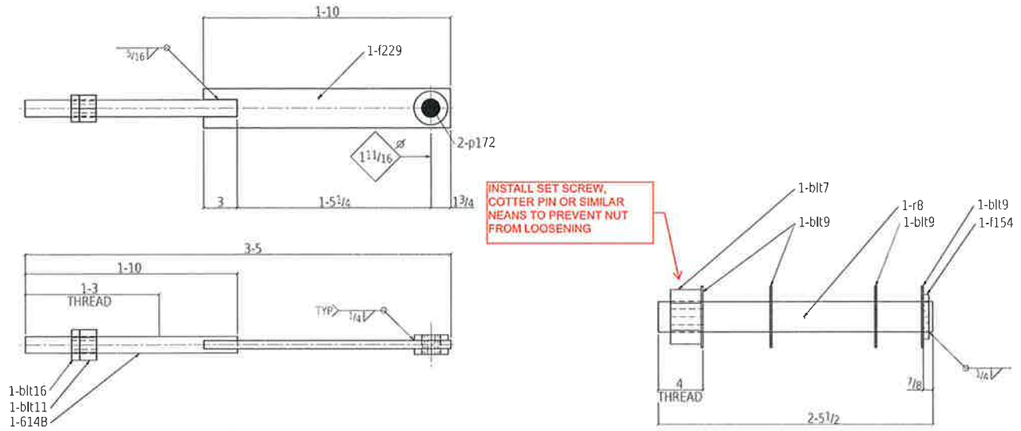

2 CABLE ADJUSTERS 614B

8 HINGE PINS 614C

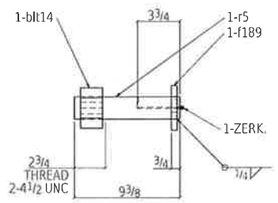

4 SHEAVE PINS 614D

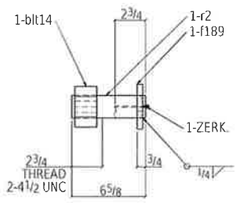

2 SHEAVE PINS 614E

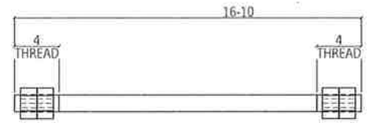

ONE HINGE PIN 614F

BILL OF MATERIAL

QTY total	Piece Mark	QTY unit	Description	Length	Remarks	Weight Unit
2	614A		LOCK-OFF PIN		HOT DIP GALVANIZE	80
2	pp86	1	PIPE 1 STD	6 3 7/8	A538	11
2	EB	1	3/4 EYE BOLT	0 6 5/8	A36	4
2	r15	1	BR3 1/2	2 0	A709-50	65
2		1	3/4 NUT		HMST A563	
2		1	3/4 NUT		HHNT A563	
2	CS	1	MC MASTER-CARR 9627K67	1 3	COMPRESSION SPRING	
			1 13/16 DIA / 420 LBS / GALV			
2	614B		CABLE ADJUSTER			29
2	614B	1	BR1 1/2	1 10	A36	11
2	f229	1	FB3"x3 1/2	1 10	A36	16
4	p172	2	RPL 1/2"x3		A36	1
2		1	1 1/2 NUT		NMST A563	
2		1	1 1/2 NUT		HHNT A563	
8	614C		HINGE PIN			52
8	614C	1	BR2 3/4	2 5 1/2	A36	50
8	f154	1	FB1/2"x8	0 4	A36	2
8		1	2 3/4 NUT		HHNT A563	
32		4	2 3/4 WASHER		HD A436	
ONE						
8	blt7	8	2 3/4 HEX HEAD		SET SCREW LOCK NUT A563	
4	614D		SHEAVE PIN			11
4	r5	1	BR2	0 6 3/8	A36	8
4	f189	1	FB1/2"x4	0 4	A36	2
4	ZERK	1	1/8 PTF SS ZERK		AEER CLASS F	0
4		1	2 NUT		HHNT A563	
2	614E		SHEAVE PIN		HOT DIP GALVANIZE	8
2	r19	1	BR2	0 6 5/8	A36	6
2	f189	1	FB1/2"x4	0 4	A36	2
2	ZERK	1	1/8 PTF SS ZERK		AEER CLASS F	0
2		1	2 NUT		HHNT A563	
ONE	614F		HINGE PIN			101
1	r8	1	BR3 1/2	1 6 10	A36	101
4		4	1 1/2 NUT		HHNT A563	

Total weight 795

REV	DESCRIPTION	BY	CHK	DATE
D	FOR FABRICATION	MRH	KB	Jan 6 2015
A	FOR APPROVAL	MRH	KB	Oct 23 2014

FOR FABRICATION
Dave Hankins 1-22-15

DETAILING:
JOB 2265
REF E1

FABRICATION TECHNICAL SERVICES, INC.
307 N. LINCOLN STE. B, POST FALLS, ID 83854
(208) 457-8282 fax: (208) 457-8208
EMAIL: kevin@FTSsteeldetailing.com

HOLES DIA UNO: 13/16
SURF PREP SEE B.O.M.
FINISH: SEE B.O.M.

WELD 3/16 FILLET U.N.O. (E70XX)
W.P. (TAILS)
COL BASE PLATES ARE ALWAYS SECTION CUTS LOOKING DOWN

JESSE ENGINEERING CO.
1840 Marine View Drive, Tacoma, Washington 98422 Ph. 253-922-7433

TOLERANCES:
(UNLESS OTHERWISE SPECIFIED)
3 PLACE DECIMALS +/- .01
2 PLACE DECIMALS +/- .03
FRACTIONS +/- 1/16
ANGLES +/- 2 DEGREES
MACHINE FINISHES 125 √ U.N.

PROJECT: IFA HOLLIS/CLARK BAY FERRY TERMINAL IMPROVEMENTS
CONTRACTOR: WESTERN MARINE CONSTRUCTION
DESCRIPTION: INTERMEDIATE RAMP
DATE: 10-07-14
JOB NO: 203960
DWG NO: 614

State of Alaska
Dept. of Transportation and Public Facilities
Marine Facilities Engineering

CONTRACTOR SUBMITTAL REVIEW

Checking is only for conformance with the design concepts of the Project and compliance with the information given in the Contract Documents. The Contractor is responsible for dimensions to be confirmed and correlated at the job site for information that pertains solely to the fabrication process or to techniques of construction for coordination of the work of all trades.

ACCEPTED
ACCEPTED AS NOTED ✓
RETURNED FOR CORRECTION

02/09/2015 Tim Doggett
Date Design Engineer

Record Drawings have been reviewed by the Project Engineer, and represent to the best of my knowledge, the project as constructed.
PE _____ Date 12/10/15

SHEET SIZE: 24X36
Jan 06 2015 06:37:44 PM

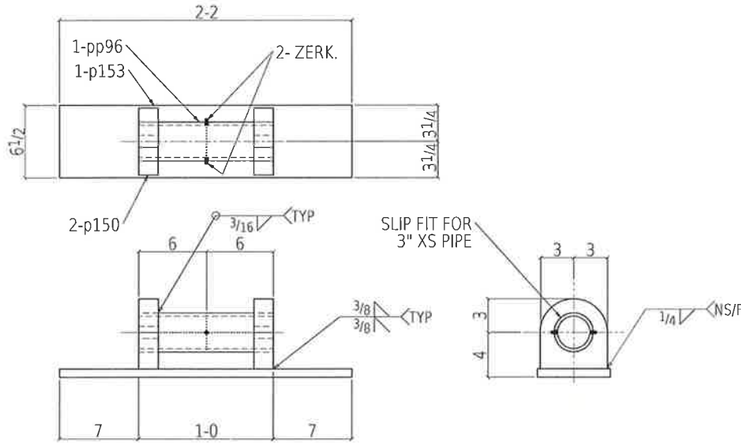

PROVIDE 3/32" DEEP GREASE GROOVES
(2) LONGITUDINAL AND (1) ABOUT THE INSIDE CIRCUMFERENCE
AT THE MID POINT OF THE PIPE

8 HINGE UPPERS 615A

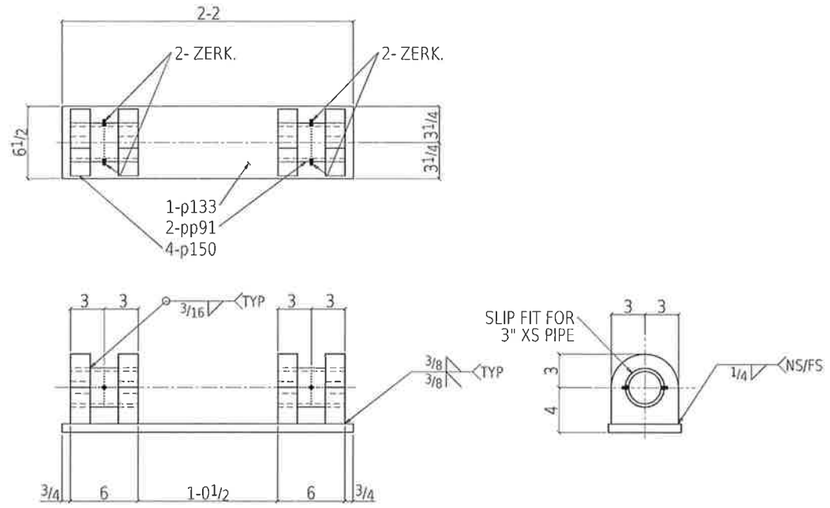

PROVIDE 3/32" DEEP GREASE GROOVES
(2) LONGITUDINAL AND (1) ABOUT THE INSIDE CIRCUMFERENCE
AT THE MID POINT OF THE PIPE

8 HINGE LOWERS 615B

BILL OF MATERIAL

QTY total	Piece Mark	QTY unit	Description	Length	Remarks	Weight Unit
8	615A		HINGE UPPER			83
8	pp96	1	PIPE 3 XSTG	1 0	A538	10
16	p150	2	PL 3/8x6	0 6 1/2	A36	19
8	p153	1	PL 3/8x6 1/2	2 2	A36	36
16	ZERK	2	1/8 PTF SS ZERK		A668 CLASS F	0
8	615B		HINGE LOWER		HOT DIP GALVANIZE	121
16	pp91	2	PIPE 3 XSTG	0 6	A538	5
32	p150	4	PL 3/8x6	0 6 1/2	A36	19
8	p133	1	PL 3/8x6 1/2	2 2	A36	36
32	ZERK	4	1/8 PTF SS ZERK		A668 CLASS F	0

Total weight 1633

REV	DESCRIPTION	BY	CHK	DATE
D	FOR FABRICATION	MRH	KB	Jan 6 2015
A	FOR APPROVAL	MRH	KB	Oct 23 2014

FOR FABRICATION
Dave Hankins 1-22-15

DETAILING:
JOB: 2265
REF E1

FABRICATION TECHNICAL SERVICES, INC.
307 N. LINCOLN STE. B POST FALLS, ID 83854
(208) 457-8282 fax (208) 457-8208
EMAIL: kevin@FTSsteeldetailing.com

HOLES DIA UNO: 13/16
SURF PREP SEE B.O.M.
FINISH: SEE B.O.M.

WELD 3/16 FILLET U.N.O. (E70XX)
W.P. (TAILS)
COL BASE PLATES ARE ALWAYS SECTION CUTS LOOKING DOWN

JESSE ENGINEERING CO.

1840 Marine View Drive, Tacoma, Washington 98422 Ph. 253-922-7433

TOLERANCES:
(UNLESS OTHERWISE SPECIFIED)
3 PLACE DECIMALS +/- .01
2 PLACE DECIMALS +/- .03
FRACTIONS +/- 1/16
ANGLES +/- 2 DEGREES
MACHINE FINISHES 125 √ U.N.

PROJECT: IFA HOLLIS/CLARK BAY FERRY TERMINAL IMPROVEMENTS
CONTRACTOR: WESTERN MARINE CONSTRUCTION
DESCRIPTION: INTERMEDIATE RAMP
DATE: 10-07-14
JOB NO: 203960
DWG NO: 615

State of Alaska
Dept. of Transportation and Public Facilities
Marine Facilities Engineering

CONTRACTOR SUBMITTAL REVIEW

Checking is only for conformance with the design concepts of the Project and compliance with the information given in the Contract Documents. The Contractor is responsible for dimensions to be confirmed and correlated at the job site for information that pertains solely to the fabrication process or to techniques of construction for coordination of the work of all trades.

ACCEPTED ✔
ACCEPTED AS NOTED
RETURNED FOR CORRECTION
02/09/2015 Tim Doggett
Date Design Engineer

Record Drawings have been reviewed by the Project Engineer, and represent to the best of my knowledge, the project as constructed.
PE _____ Date 12/10/15

SHEET SIZE 24X36
07 19 37 PM
Jan 06 2015

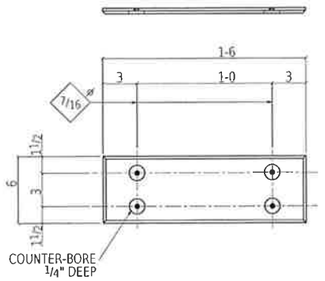

2 BUSHINGS 616A

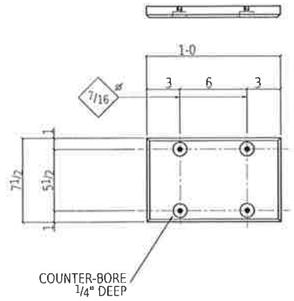

2 BUSHINGS 616B

BILL OF MATERIAL

QTY Total	Piece Mark	QTY unit	Description	Length	Remarks	Weight Unit
2	616A		BUSHING			4
2	m17	1	1/2" UHMW	1 6	3 pcs	4
2	616B		BUSHING			7
2	616B	1	1" UHMW	1 0	3 pcs	7

Total weight 24

REV	DESCRIPTION	BY	CHK	DATE
0	FOR FABRICATION	MRH	KB	Jan 6 2015
A	FOR APPROVAL	MRH	KB	Oct 23 2014

FOR FABRICATION
Dave Hankins 1-22-15

DETAILING
JOB: 2265
REF E1

FABRICATION TECHNICAL SERVICES, INC.
307 N. LINCOLN STE. B, POST FALLS, ID 83854
(208) 457-8282 fax: (208) 457-8208
EMAIL kevin@FTSsteeldetailing.com

HOLES DIA UNO: 13/16
SURF PREP SEE B.O.M.
FINISH: SEE B.O.M.

WELD 3/16 FILLET U.N.O. (E70XX)
W.P. (TAILS)
COL BASE PLATES ARE ALWAYS SECTION CUTS LOOKING DOWN

JESSE ENGINEERING CO.
1840 Marine View Drive, Tacoma, Washington 98422 Ph. 253-922-7433

TOLERANCES:
(UNLESS OTHERWISE SPECIFIED)
3 PLACE DECIMALS +/- .01
2 PLACE DECIMALS +/- .03
FRACTIONS +/- 1/16
ANGLES +/- 2 DEGREES
MACHINE FINISHES 125 √U.N.

PROJECT: IFA HOLLIS/CLARK BAY FERRY TERMINAL IMPROVEMENTS
CONTRACTOR: WESTERN MARINE CONSTRUCTION
DESCRIPTION: INTERMEDIATE RAMP
DATE: 10-07-14
JOB NO: 203960
DWG NO: 616

State of Alaska
Dept. of Transportation and Public Facilities
Marine Facilities Engineering

CONTRACTOR SUBMITTAL REVIEW

Checking is only for conformance with the design concepts of the Project and compliance with the information given in the Contract Documents. The Contractor is responsible for dimensions to be confirmed and correlated at the job site for information that pertains solely to the fabrication process or to techniques of construction for coordination of the work of all trades.

ACCEPTED ✓
ACCEPTED AS NOTED
RETURNED FOR CORRECTION

02/09/2015 Tim Doggett
Date Design Engineer

Record Drawings have been reviewed by the Project Engineer, and represent to the best of my knowledge, the project as constructed.

PE _____ Date 12/10/15

SHEET SIZE: 24X36
06:37:45 PM
Jan 06 2015

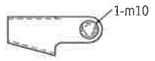

2 WEDGE SOCKETS 617B

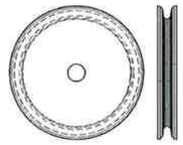

6 SHEAVES 617C

BILL OF MATERIAL

QTY total	Piece Mark	QTY unit	Description	Length	Remarks	Weight Unit
2	617A		APRON CABLE			64
2	617B	1	7/8 WIRE ROPE	22 4 9/16	A36	46
2	617C	1	7/8 WIRE ROPE	8 8 13/16	A36	18
2	617B		WEDGE SOCKET		PAINTED	51
2	617B	1	CROSBY S421T 7/8	0 1 13/16	A36	48
2	m10	1	1 5/8 PIN		A36	3
6	617C		SHEAVE		PAINTED	105
6	617C	1	16" OD		A36	105
			13" TREAD - 25 1/16 HUB		2" DIA SHAFT- BRNZ BSHG	

Total weight 861

REV	DESCRIPTION	BY	CHK	DATE
0	FOR FABRICATION	MRH	KR	Jan 6 2015
A	FOR APPROVAL	MRH	KR	Oct 23 2014

FOR FABRICATION
Dave Hankins 1-22-15

DETAILING:
JOB: 2265
REF E1

FABRICATION TECHNICAL SERVICES, INC.
307 N. LINCOLN STE. B. POST FALLS, ID 83854
(208) 457-8282 fax: (208) 457-8208
EMAIL: kevin@FTSsteeldetailing.com

HOLES DIA UNO: 13/16
SURF PREP SEE B.O.M.
FINISH: SEE B.O.M.

WELD 3/16 FILLET U.N.O. (E70XX)
W.P. (TAILS)
COL BASE PLATES ARE ALWAYS SECTION CUTS LOOKING DOWN

JESSE ENGINEERING CO.
1840 Marine View Drive, Tacoma, Washington 98422 Ph. 253-922-7433

TOLERANCES:
(UNLESS OTHERWISE SPECIFIED)
3 PLACE DECIMALS +/- .01
2 PLACE DECIMALS +/- .03
FRACTIONS +/- 1/16
ANGLES +/- 2 DEGREES
MACHINE FINISHES 125 √U.N.

PROJECT: IFA HOLLIS/CLARK BAY FERRY TERMINAL IMPROVEMENTS
CONTRACTOR: WESTERN MARINE CONSTRUCTION
DESCRIPTION: INTERMEDIATE RAMP
DATE: 10-07-14
JOB NO: 203960
DWG NO: 617

SHEET SIZE: 24X36
Jan 06 2015 06:37:45 PM

State of Alaska
Dept. of Transportation and Public Facilities
Marine Facilities Engineering

CONTRACTOR SUBMITTAL REVIEW

Checking is only for conformance with the design concepts of the Project and compliance with the information given in the Contract Documents. The Contractor is responsible for dimensions to be confirmed and correlated at the job site for information that pertains solely to the fabrication process or to techniques of construction for coordination of the work of all trades.

ACCEPTED ✓
ACCEPTED AS NOTED
RETURNED FOR CORRECTION

02/09/2015 Tim Doggett
Date Design Engineer

Record Drawings have been reviewed by the Project Engineer, and represent to the best of my knowledge, the project as constructed.

PE Date 12/10/15

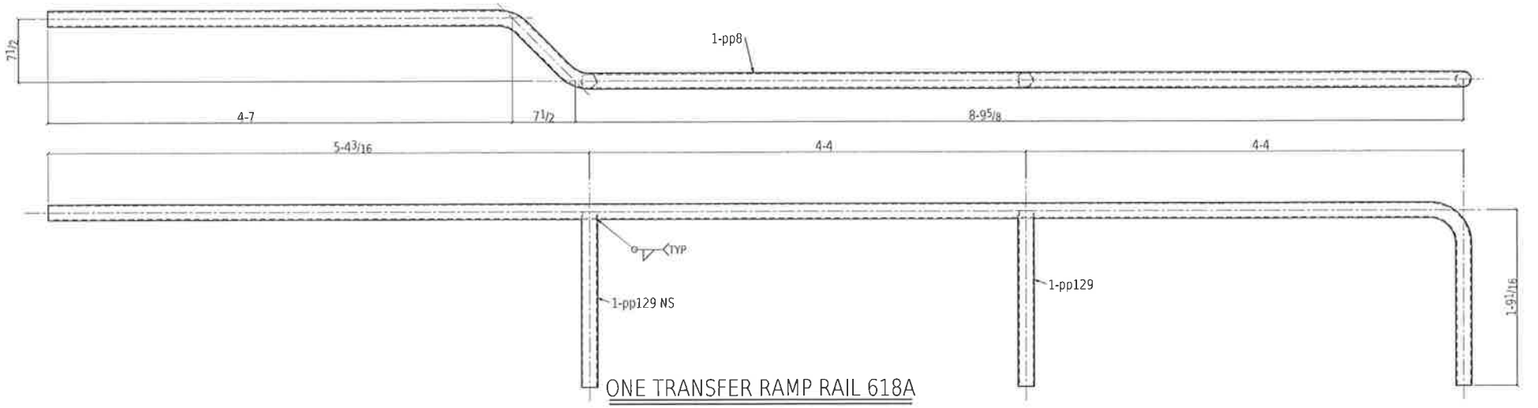

ONE TRANSFER RAMP RAIL 618A

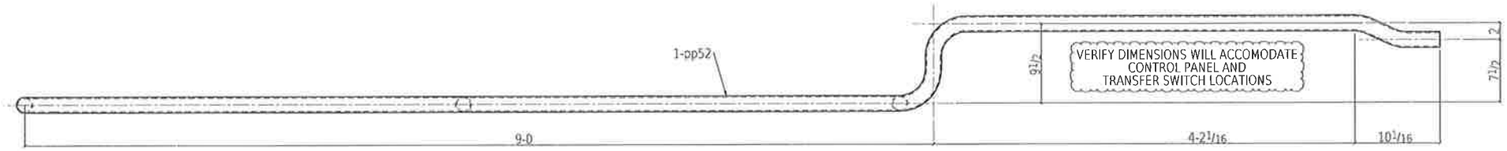

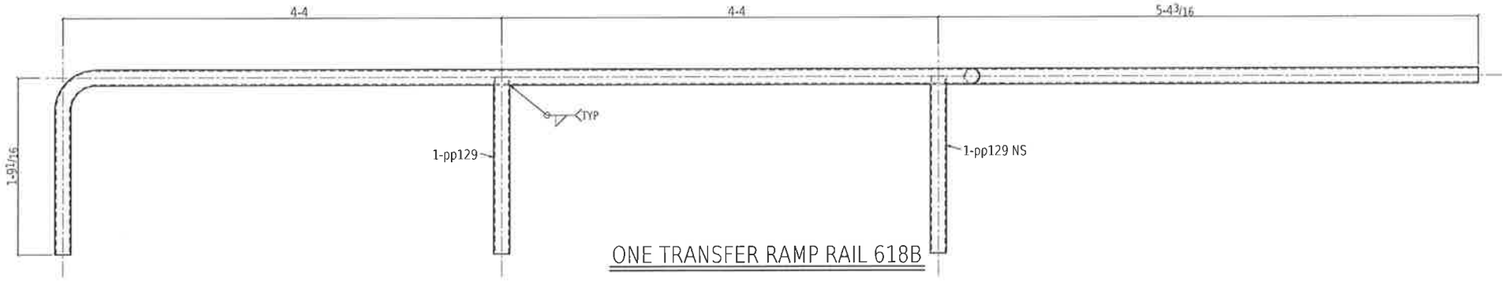

ONE TRANSFER RAMP RAIL 618B

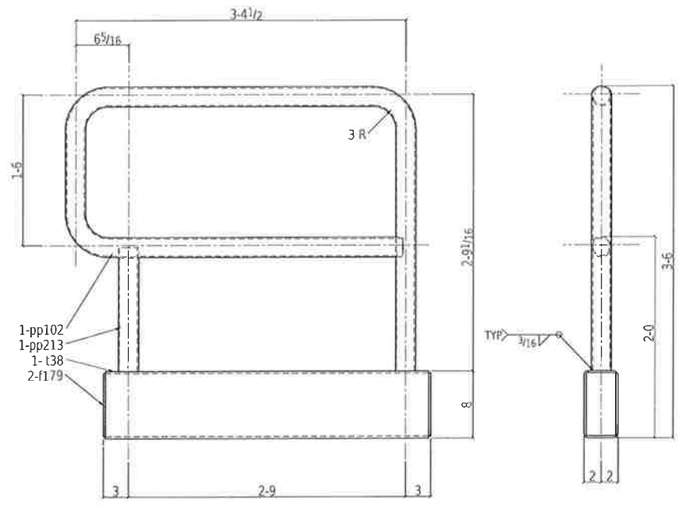

2 TRANSFER PL RAILS 618C

BILL OF MATERIAL

QTY total	Piece Mark	QTY unit	Description	Length		Remarks	Weight Unit
ONE	618A		TRANSFER RAMP RAIL			HOT DIP GALVANIZE	53
1	pp8	1	PIPE 1 1/2 STD	15	10 1/4	A538	43
1	pp11	1	PIPE 1 1/2 STD	1	9 1/16	A538	5
1	pp129	1	PIPE 1 1/2 STD	1	9 1/16	A538	5
ONE	618B		TRANSFER RAMP RAIL			HOT DIP GALVANIZE	54
1	pp52	1	PIPE 1 1/2 STD	16	1 5/16	A538	44
1	pp11	1	PIPE 1 1/2 STD	1	9 1/16	A538	5
1	pp129	1	PIPE 1 1/2 STD	1	9 1/16	A538	5
2	618C		TRANSFER PL RAIL			HOT DIP GALVANIZE	109
2	t38	1	HSS8x6x1/4	3	2 1/2	A500B	61
2	pp102	1	PIPE 2 STD	10	6 5/8	A538	39
2	pp213	1	PIPE 2 STD	1	2 13/16	A538	5
4	f179	2	F8 1/4x3 1/2	0	7 1/2	A36	2

Total weight 324

REV	DESCRIPTION	BY	CHK	DATE
0	FOR FABRICATION	MRH	KB	Jan 6 2015
A	FOR APPROVAL	MRH	KB	Oct 23 2014

FOR FABRICATION
Dave Hawkins 1-22-15

Record Drawings have been reviewed by the Project Engineer, and represent to the best of my knowledge, the project as constructed.
PE _____ Date 12/10/15

DETAILING:
JOB: 2265
REF E1

FABRICATION TECHNICAL SERVICES, INC.
307 N. LINCOLN STE. B, POST FALLS, ID 83854
(208) 457-8282 fax: (208) 457-8208
E-MAIL kevin@FTSsteeldetailing.com

HOLES DIA UNO: 13/16
SURF PREP SEE B.O.M.
FINISH: SEE B.O.M.

WELD 3/16 FILLET U.N.O. (E70XX)
W.P. (TAILS)
COL BASE PLATES ARE ALWAYS SECTION CUTS LOOKING DOWN

JESSE ENGINEERING CO.
1840 Marine View Drive, Tacoma, Washington 98422 Ph. 253-922-7433

TOLERANCES:
(UNLESS OTHERWISE SPECIFIED)
3 PLACE DECIMALS +/- .01
2 PLACE DECIMALS +/- .03
FRACTIONS +/- 1/16
ANGLES +/- 2 DEGREES
MACHINE FINISHES 125 √U.N.

PROJECT: IFA HOLLIS/CLARK BAY FERRY TERMINAL IMPROVEMENTS
CONTRACTOR: WESTERN MARINE CONSTRUCTION
DESCRIPTION: INTERMEDIATE RAMP
DATE: 10-07-14
JOB NO: 203960
DWG NO: 618

SHEET SIZE 24X36
09 39 26 AM
Jan 17 2015

State of Alaska
Dept. of Transportation and Public Facilities
Marine Facilities Engineering

CONTRACTOR SUBMITTAL REVIEW

Checking is only for conformance with the design concepts of the Project and compliance with the information given in the Contract Documents. The Contractor is responsible for dimensions to be confirmed and correlated at the job site for information that pertains solely to the fabrication process or to techniques of construction for coordination of the work of all trades.

ACCEPTED ✓
ACCEPTED AS NOTED
RETURNED FOR CORRECTION
02/09/2015 Tim Doggett
Date Design Engineer

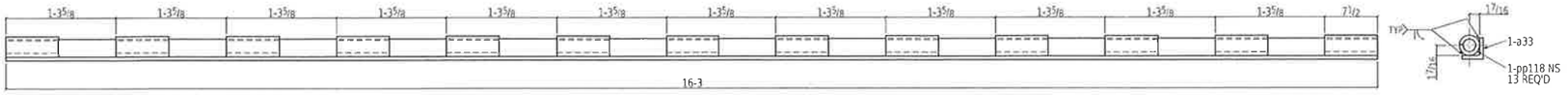

ONE TRANSFER PLT HINGE 620A

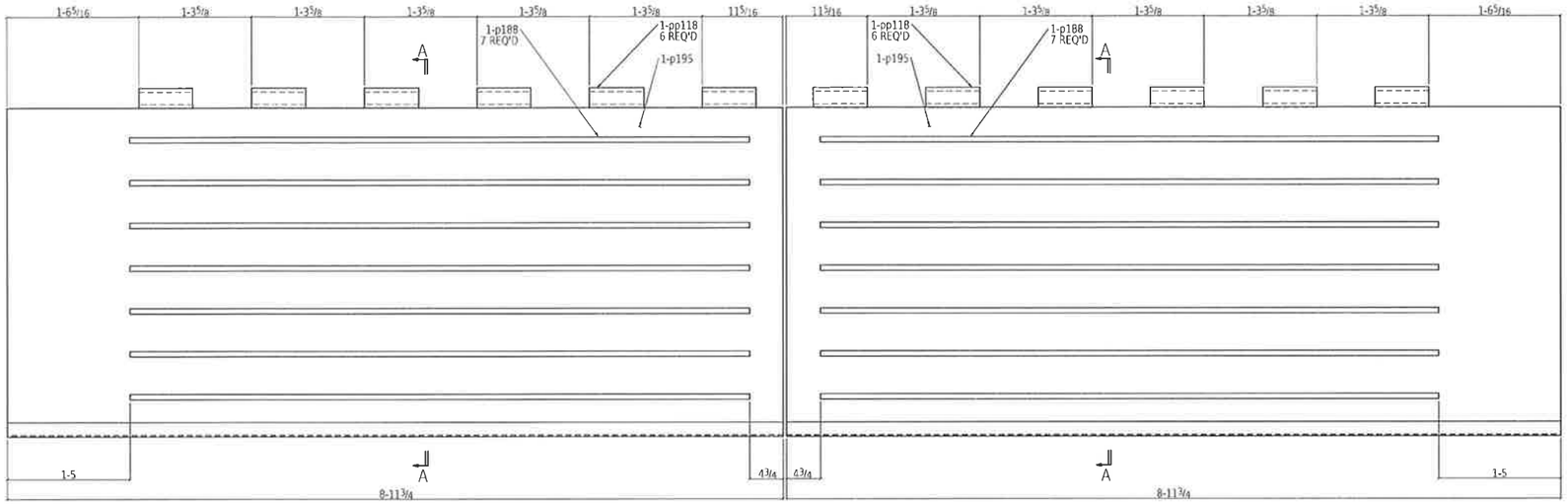

ONE TRANSFER PLATE 620B

ONE TRANSFER PLATE 620C

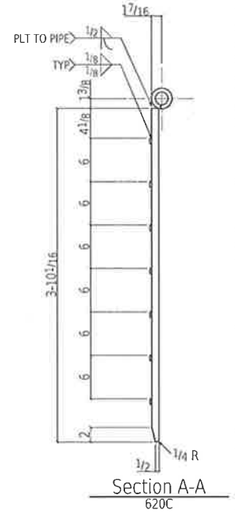

Section A-A
620C

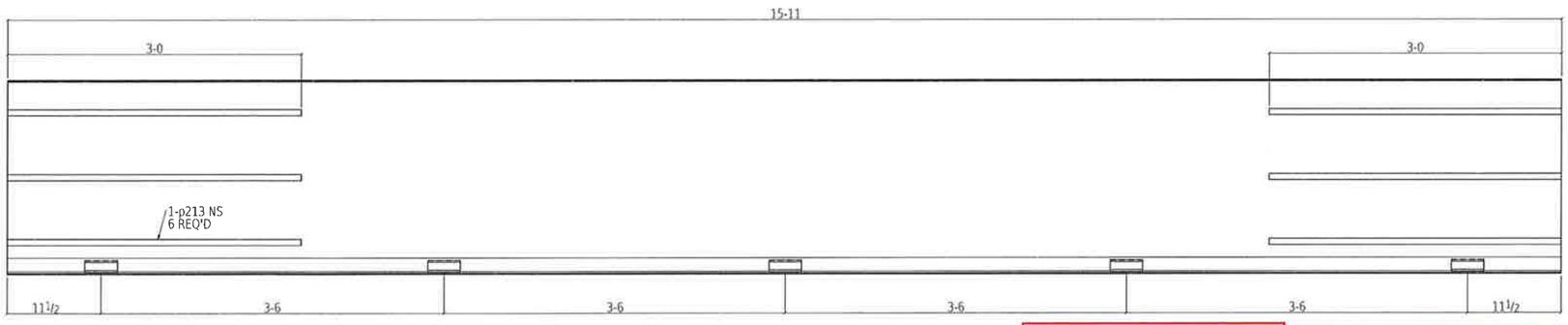

ONE TRANSITION PLATE 620D

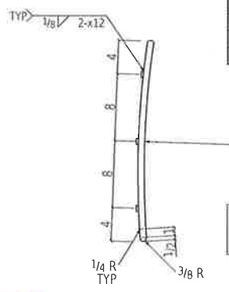

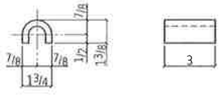

5 MISCS 620E

BILL OF MATERIAL

QTY total	Piece Mark	QTY unit	Description	Length	Remarks	Weight Unit
ONE	620A		TRANSFER PLT HINGE		HOT DIP GALVANIZE	264
13	pp118	13	PIPE 2 1/2 XXSTG	0 7 1/2	A538	9
1	a33	1	L3x3x1/2	16 3	A36	153
ONE	620B		TRANSFER PLATE		HOT DIP GALVANIZE	1491
6	pp118	6	PIPE 2 1/2 XXSTG	0 7 1/2	A538	9
1	p195	1	PL1x46 1/16	8 11 3/4	A36	1407
7	p188	7	PL 1 1/2x3/4	7 2	A36	5
ONE	620C		TRANSFER PLATE		HOT DIP GALVANIZE	1491
6	pp118	6	PIPE 2 1/2 XXSTG	0 7 1/2	A538	9
1	p195	1	PL1x46 1/16	8 11 3/4	A36	1407
7	p188	7	PL 1 1/2x3/4	7 2	A36	5
ONE	620D		TRANSITION PLATE		HOT DIP GALVANIZE	146731
1	pp29	1	PL 2 1/2x35 9/16	15 11	BENT A36	146219
6	p213	6	PL 5/16x3/4	3 0	A36	2
5	620E		MISC		HOT DIP GALVANIZE	1
5	620E	1	PL 3 1/4x13 1/16	0 3	BENT A36	1

Total weight 149481

REV	DESCRIPTION	BY	CHK	DATE
0	FOR FABRICATION	MRH	KB	Jan 6 2015
A	FOR APPROVAL	MRH	KB	Oct 23 2014

DETAILING:
JOB: 2265
REF: E1

FABRICATION TECHNICAL SERVICES, INC.
307 N. LINCOLN STE. B, POST FALLS, ID 83854
(208) 457-8282 fax: (208) 457-8208
EMAIL: kevin@FTSsteeldetailing.com

HOLES DIA UNO: 13/16
SURF PREP: SEE B.O.M.
FINISH: SEE B.O.M.

WELD 3/16 FILLET U.N.O. (E70XX)
W.P. (TAILS)
COL BASE PLATES ARE ALWAYS SECTION CUTS LOOKING DOWN

State of Alaska
Dept. of Transportation and Public Facilities
Marine Facilities Engineering

CONTRACTOR SUBMITTAL REVIEW

Checking is only for conformance with the design concepts of the Project and compliance with the information given in the Contract Documents. The Contractor is responsible for dimensions to be confirmed and correlated at the job site for information that pertains solely to the fabrication process or to techniques of construction for coordination of the work of all trades.

ACCEPTED
ACCEPTED AS NOTED
RETURNED FOR CORRECTION

02/09/2015 Tim Doggett
Date Design Engineer

Record Drawings have been reviewed by the Project Engineer and represent to the best of my knowledge, the project as constructed.
PE Date 12/10/15

FOR FABRICATION
Dave Hankins 1-22-15

TOLERANCES:
(UNLESS OTHERWISE SPECIFIED)
3 PLACE DECIMALS +/- .01
2 PLACE DECIMALS +/- .03
FRACTIONS +/- 1/16
ANGLES +/- 2 DEGREES
MACHINE FINISHES 125 U.N.

JESSE ENGINEERING CO.
1840 Marine View Drive, Tacoma, Washington 98422 Ph. 253-922-7433

PROJECT: IFA HOLLIS/CLARK BAY FERRY TERMINAL IMPROVEMENTS
CONTRACTOR: WESTERN MARINE CONSTRUCTION
DESCRIPTION: INTERMEDIATE RAMP
DATE: 10-07-14
JOB NO: 203960
DWG NO: 620

SHEET SIZE 24X36
03:48:55 PM
Jan 07 2015

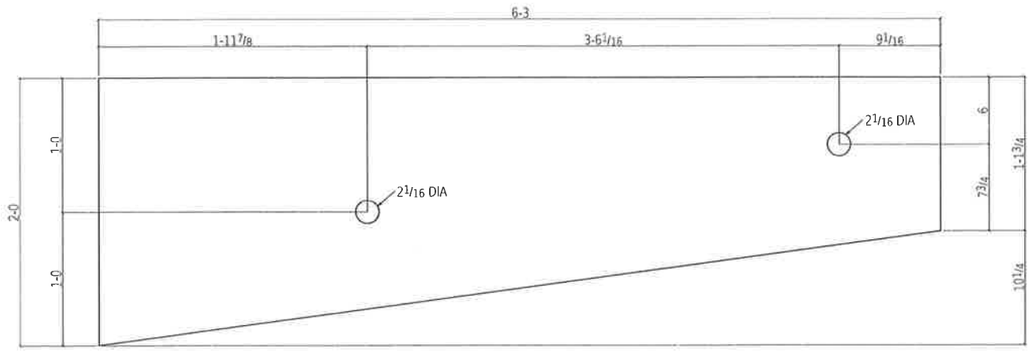

ONE PL 5/16x24x6-3 p218

GRADE: A36

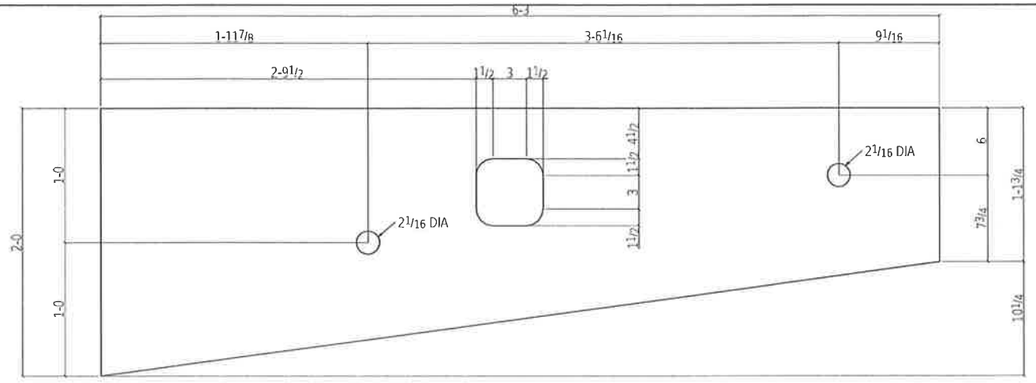

ONE PL 5/16x24x6-3 p222

GRADE: A36

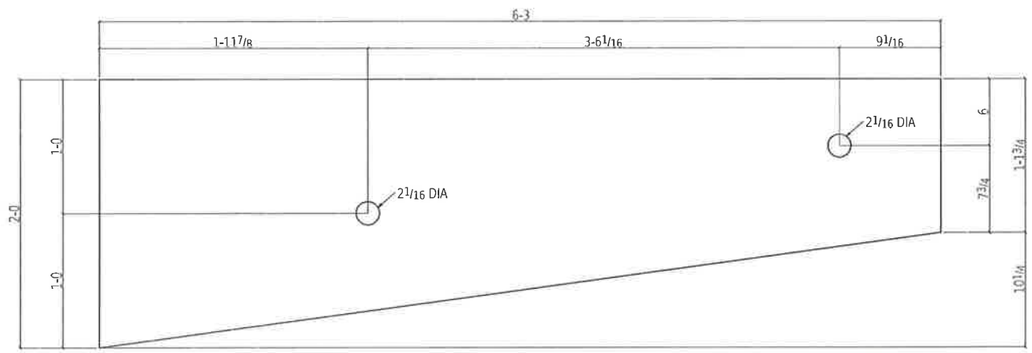

ONE PL 5/16x24x6-3 p230

GRADE: A36

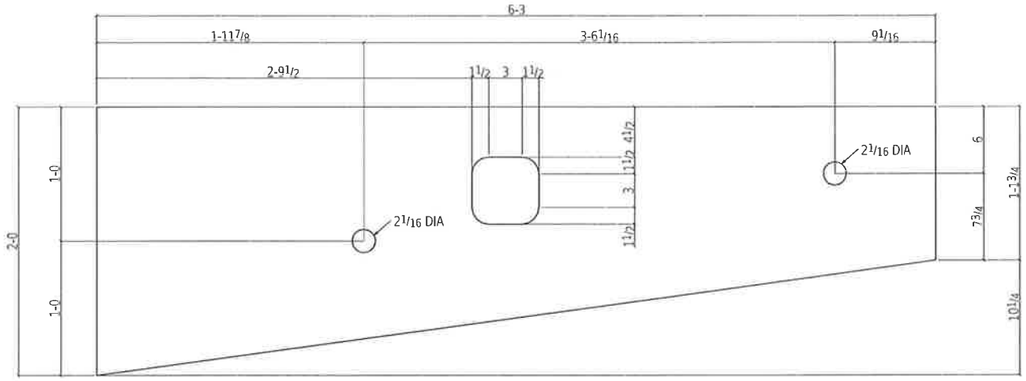

ONE PL 5/16x24x6-3 p231

GRADE: A36

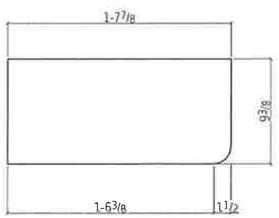

2 PL12GAx9 3/8x1-7 7/8 p177

GRADE: A36

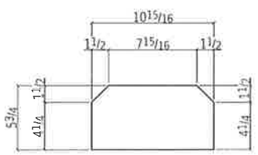

12 PL 3/8x5 3/4x0-10 15/16 p143

GRADE: A36

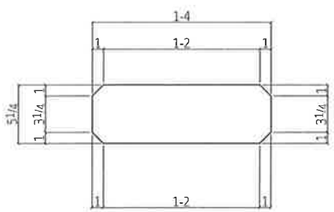

8 PL 3/8x5 1/4x1-4 p124

GRADE: A36

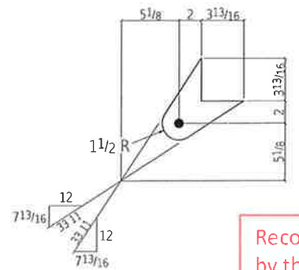

2 PL 3/8x7 5/16x0-7 5/16 p155

GRADE: A36

Record Drawings have been reviewed by the Project Engineer, and represent to the best of my knowledge, the project as constructed.

PE _____ Date 12/10/15

Jan 06 2015 06:37:46 PM SHEET SIZE 24X36 JOB NO. ###

TOLERANCES:

(UNLESS OTHERWISE SPECIFIED)
3 PLACE DECIMALS +/- .01
2 PLACE DECIMALS +/- .03
FRACTIONS +/- 1/16
ANGLES +/- 2 DEGREES
MACHINE FINISHES 125 √U.N.

REV	DESCRIPTION	BY	CHK	DATE
0	FOR FABRICATION	MBH	KR	Jan 6 2015

NOTES:
1. ERECT ALL MEMBER WITH THE MARKED END IN THE SAME RELATIVE POSITION AS SHOWN ON THE ERECTION DRAWING.
2. B.O.S.=BOTTOM OF STEEL. ELEVATIONS REFERENCED (xxx-x x/x) ARE TOP OF STEEL.
3. PLEASE PROVIDE INFORMATION AND VERIFICATIONS INDICATED IN CLOUDED AREAS. CLOUDED NOTES WITH NO REMARKS FROM THE APPROVAL AUTHORITY WILL BE CONSIDERED AS AN AFFIRMATION.

DETAILING: FABRICATION TECHNICAL SERVICES, INC.
www.FTSsteeldetailing.com
CONTACT Kevin@FTSsteeldetailing.com
ph. (208) 457-8282

JESSE ENGINEERING CO.
1840 Marine View Drive, Tacoma, Washington 98422 Ph. 253-922-7433

REF: SHEETS A600-620

PROJECT: IFA HOLLIS/CLARK BAY FERRY TERMINAL IMPROVEMENTS
CONTRACTOR: WESTERN MARINE CONSTRUCTION
DESCRIPTION: INTERMEDIATE RAMP PARTS
DATE: 01-06-15
FABRICATION JOB NO: 203960
DWG NO: G600

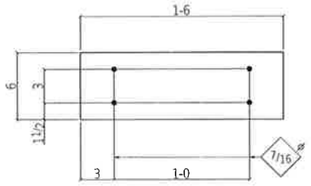

2 FB1/2x6x1-6 f8

GRADE: A36

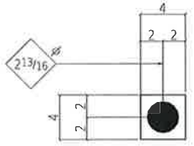

8 FB1/2x4x0-4 f154

GRADE: A36

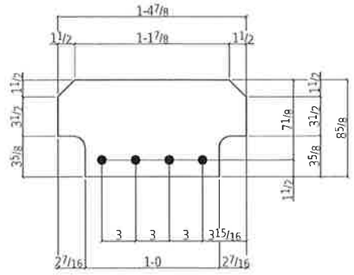

12 PL1/2x8 5/8x1-4 7/8 p140

GRADE: A36

Record Drawings have been reviewed by the Project Engineer, and represent to the best of my knowledge, the project as constructed.

PE _____ Date 12/10/15

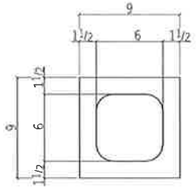

2 PL1/2x9x0-9 p221

GRADE: A36

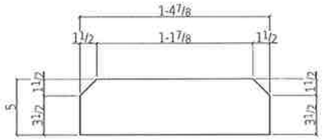

6 FB1/2x5x1-4 7/8 f20

GRADE: A36

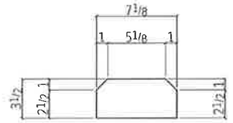

12 FB1/2x3 1/2x0-7 1/8 f29

GRADE: A36

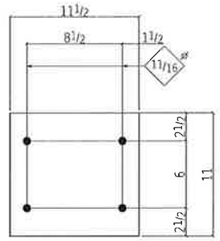

2 PL1/2x11x0-11 1/2 p68

GRADE: A36

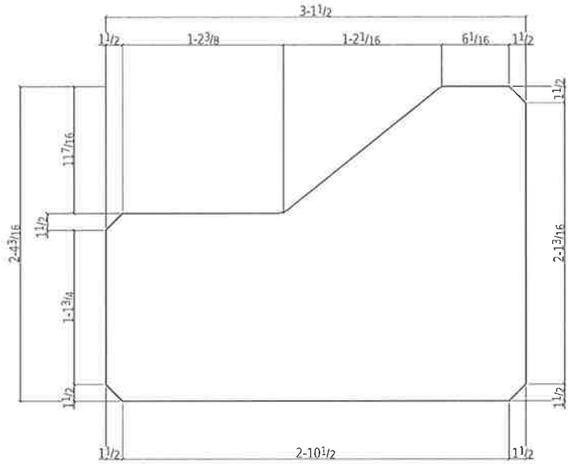

8 PL1/2x28 3/16x3-11 1/2 p141

GRADE: A36

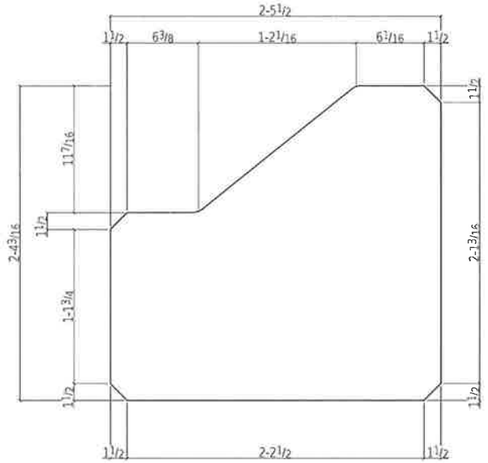

8 PL1/2x28 3/16x2-5 1/2 p142

GRADE: A36

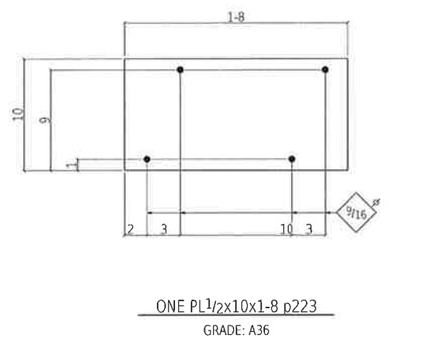

ONE PL1/2x10x1-8 p223

GRADE: A36

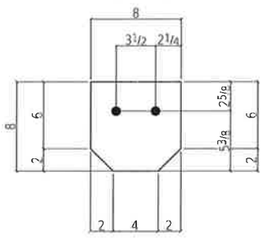

16 FB1/2x8x0-8 f127

GRADE: A36

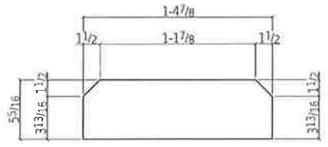

26 PL1/2x5 5/16x1-4 7/8 p129

GRADE: A36

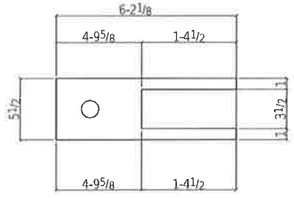

2 PL1/2x5 1/2x6-2 1/8 p159

GRADE: A36

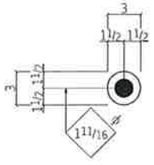

4 RPL1/2x3 p172

GRADE: A36

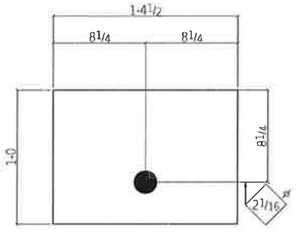

4 PL1/2x12x1-4½ p180

GRADE: A36

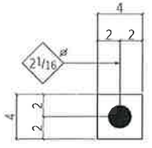

6 FB1/2x4x0-4 f189

GRADE: A36

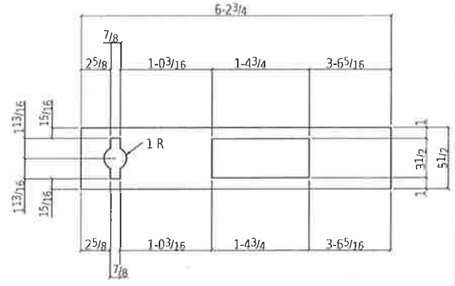

2 PL1/2x5 1/2x6-2 3/4 p228

GRADE: A36

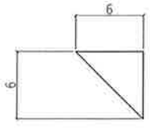

2 FB1/2x6x0-6 f156

GRADE: A36

JOB NO ####

SHEET SIZE 24X36

06:37:47 PM

Jan 06 2015

TOLERANCES:

(UNLESS OTHERWISE SPECIFIED)
3 PLACE DECIMALS +/- .01
2 PLACE DECIMALS +/- .03
FRACTIONS +/- 1/16
ANGLES +/- 2 DEGREES
MACHINE FINISHES 125 U.N.

REV	DESCRIPTION	BY	CHK	DATE
0	FOR FABRICATION	RRH	KB	Jan 6 2015

NOTES:
1. ERECT ALL MEMBER WITH THE MARKED END IN THE SAME RELATIVE POSITION AS SHOWN ON THE ERECTION DRAWING.
2. B.O.S.=BOTTOM OF STEEL. ELEVATIONS REFERENCED (xxx-x x/x) ARE TOP OF STEEL.
3. PLEASE PROVIDE INFORMATION AND VERIFICATIONS INDICATED IN CLOUDED AREAS. CLOUDED NOTES WITH NO REMARKS FROM THE APPROVAL AUTHORITY WILL BE CONSIDERED AS AN AFFIRMATION.

DETAILING: FABRICATION TECHNICAL SERVICES, INC.
www.FTSsteeldetailing.com
CONTACT: Kevin@FTSsteeldetailing.com
ph: (208) 457-8282

JESSE ENGINEERING CO.
1840 Marine View Drive, Tacoma, Washington 98422 Ph. 253-922-7433

REF: SHEETS A600-620

PROJECT: IFA HOLLIS/CLARK BAY FERRY TERMINAL IMPROVEMENTS
CONTRACTOR: WESTERN MARINE CONSTRUCTION
DESCRIPTION: INTERMEDIATE RAMP PARTS
DATE: 01-06-15
J. NUMBER (JOB NO): 203960
DWG NO: G601

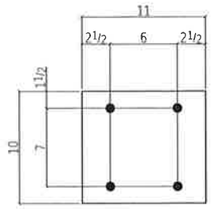

4 FB 3/4x10x0-11 f90
GRADE: A36

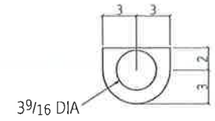

2 PL1x5x0-6 p86
GRADE: A36

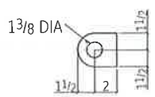

6 PL1x3x0-3 1/2 p113
GRADE: A36

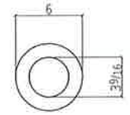

2 RPL1x6 p161
GRADE: A36

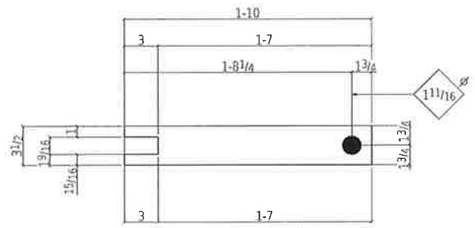

2 FB 3/4x3 1/2x1-10 f229
GRADE: A36

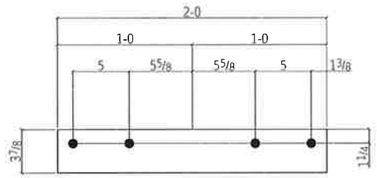

2 PL1x3 7/8x2-0 p135
GRADE: A36

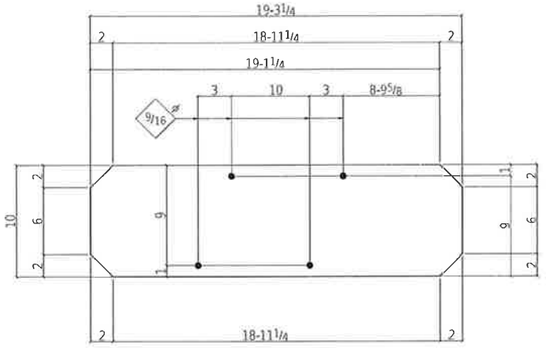

ONE PL1x10x19-3 1/4 p236
GRADE: A36

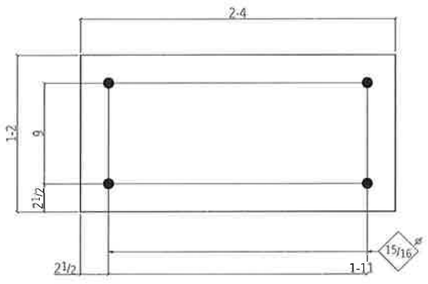

4 PL 3/4x14x2-4 p103
GRADE: A709-50

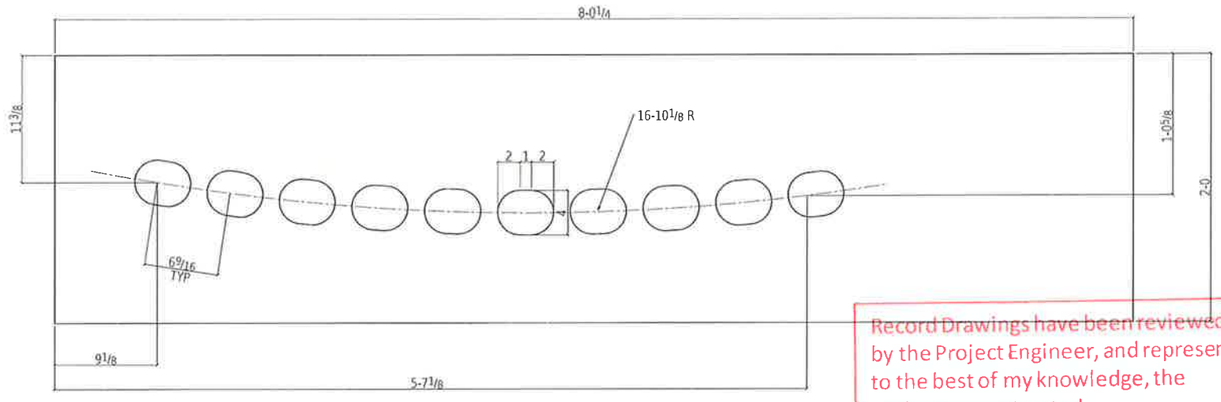

2 PL1x24x8-0 1/4 p272
GRADE: A36

Record Drawings have been reviewed by the Project Engineer, and represent to the best of my knowledge, the project as constructed.
PE Date 12/10/15

TOLERANCES:
(UNLESS OTHERWISE SPECIFIED)
3 PLACE DECIMALS +/- .01
2 PLACE DECIMALS +/- .03
FRACTIONS +/- 1/16
ANGLES +/- 2 DEGREES
MACHINE FINISHES 125 √ U.N.

REV	DESCRIPTION	BY	CHK	DATE
0	FOR FABRICATION	NRH	KB	Jan 6 2015

NOTES:
1. ERECT ALL MEMBER WITH THE MARKED END IN THE SAME RELATIVE POSITION AS SHOWN ON THE ERECTION DRAWING.
2. B.O.S.=BOTTOM OF STEEL. ELEVATIONS REFERENCED (xxx-x x/x) ARE TOP OF STEEL.
3. PLEASE PROVIDE INFORMATION AND VERIFICATIONS INDICATED IN CLOUDED AREAS. CLOUDED NOTES WITH NO REMARKS FROM THE APPROVAL AUTHORITY WILL BE CONSIDERED AS AN AFFIRMATION.

DETAILING: FABRICATION TECHNICAL SERVICES, INC.
www.FTSsteeldetailing.com
CONTACT: Kevin@FTSsteeldetailing.com
ph: (208) 457-8282

JESSE ENGINEERING CO.
1840 Marine View Drive, Tacoma, Washington 98422 Ph. 253-922-7433

REF: SHEETS A600-620

PROJECT: IFA HOLLIS/CLARK BAY FERRY TERMINAL IMPROVEMENTS
CONTRACTOR: WESTERN MARINE CONSTRUCTION
DESCRIPTION: INTERMEDIATE RAMP PARTS
DATE: 01-06-15
FABRICATOR JOB NO: 203960
DWG NO: G602

Jan 06 2015 06:37:48 PM SHEET SIZE 24X36 JOB NO ###

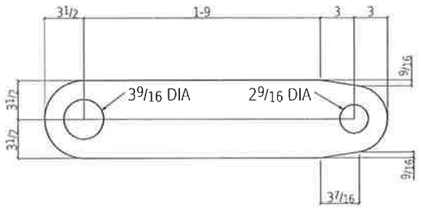

2 PL1 1/4x7x2-6 1/2 p47
GRADE: A36

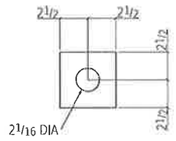

8 PL1 1/2x5x0-5 p190
GRADE A36

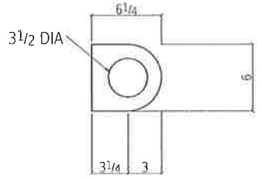

48 PL1 3/4x6x0-6 1/4 p150
GRADE A36

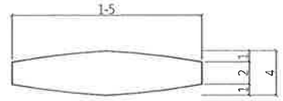

ONE PL3x4x1-5 p114
GRADE: A36

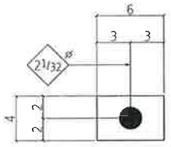

2 PL4x4x0-6 p244
GRADE A36

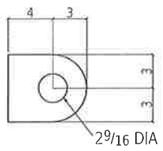

2 PL1 1/4x6x0-7 p164
GRADE: A36

Jan 06 2015 06:37:48 PM SHEET SIZE 24X36 JOB NO ###

Record Drawings have been reviewed by the Project Engineer, and represent to the best of my knowledge, the project as constructed.
PE _____ Date 12/14/15

TOLERANCES:

(UNLESS OTHERWISE SPECIFIED)
3 PLACE DECIMALS +/- .01
2 PLACE DECIMALS +/- .03
FRACTIONS +/- 1/16
ANGLES +/- 2 DEGREES
MACHINE FINISHES 125 √U.N.

REV	DESCRIPTION	BY	CHK	DATE
0	FOR FABRICATION	MRH	KB	Jan 6 2015

NOTES:
1. ERECT ALL MEMBER WITH THE MARKED END IN THE SAME RELATIVE POSITION AS SHOWN ON THE ERECTION DRAWING.
2. B.O.S.=BOTTOM OF STEEL. ELEVATIONS REFERENCED (xxx-x x/x) ARE TOP OF STEEL.
3. PLEASE PROVIDE INFORMATION AND VERIFICATIONS INDICATED IN CLOUDED AREAS. CLOUDED NOTES WITH NO REMARKS FROM THE APPROVAL AUTHORITY WILL BE CONSIDERED AS AN AFFIRMATION.

DETAILING: FABRICATION TECHNICAL SERVICES, INC.
www.FTSsteeldetailing.com
CONTACT: Kevin@FTSsteeldetailing.com
ph: (208) 457-8282

JESSE ENGINEERING CO.
1840 Marine View Drive, Tacoma, Washington 98422 Ph. 253-922-7433

REF: SHEETS A600-620

PROJECT: IFA HOLLIS/CLARK BAY FERRY TERMINAL IMPROVEMENTS
CONTRACTOR: WESTERN MARINE CONSTRUCTION
DESCRIPTION: INTERMEDIATE RAMP PARTS
DATE: 01-06-15
FABRICATION JOB NO: 203960
DWG NO: G603

Record Drawings have been reviewed by the Project Engineer, and represent to the best of my knowledge, the project as constructed.

PE _____ Date 12/10/15

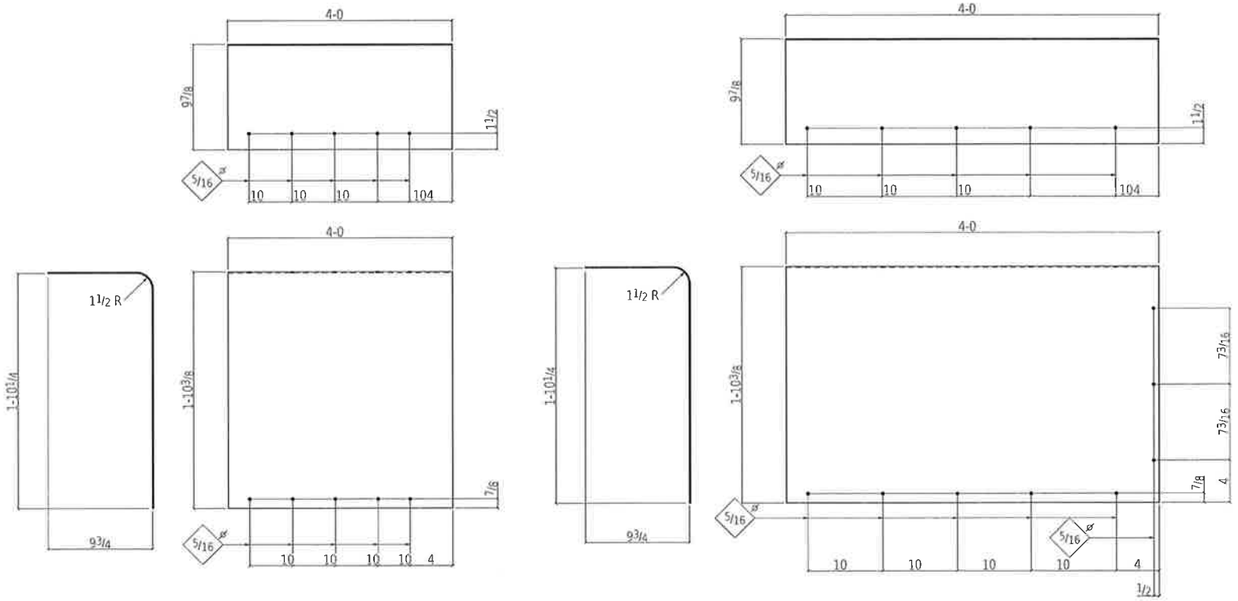

ONE PL12GAx31 1/2x4-0 bp2

GRADE: A36

2 PL12GAx31 1/2x4-0 bp12

GRADE: A36



2 PL 5/16x15 1/16x0-5 1/2 bp15

GRADE: A36

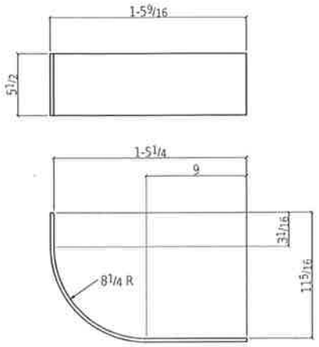

2 PL5 1/2x5/16x1-10 3/16 p214

GRADE: A36

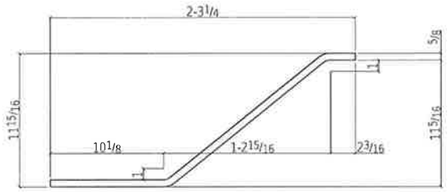

4 PL 5/8x28x2-7 1/8 bp6

GRADE: A36

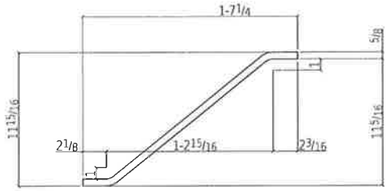

4 PL 5/8x28x1-11 1/8 bp7

GRADE: A36

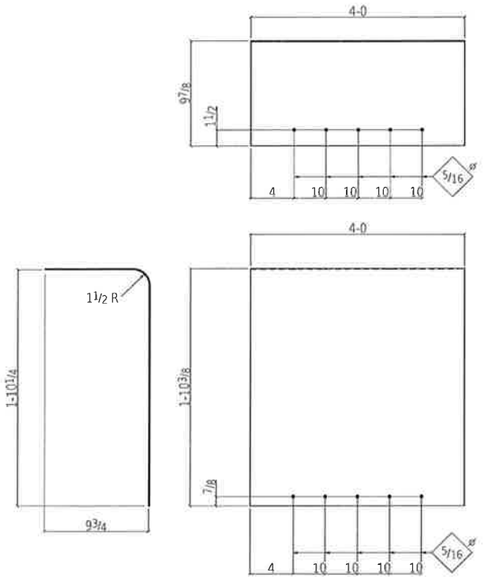

ONE PL12GAx31 1/2x4-0 bp11

GRADE: A36

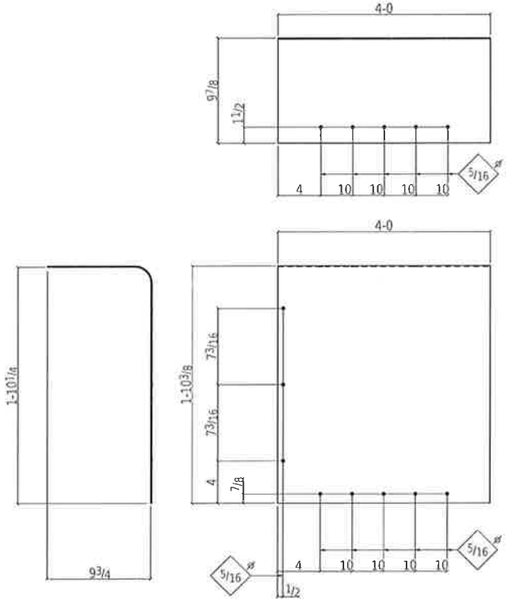

2 PL12GAx31 1/2x4-0 bp13

GRADE: A36

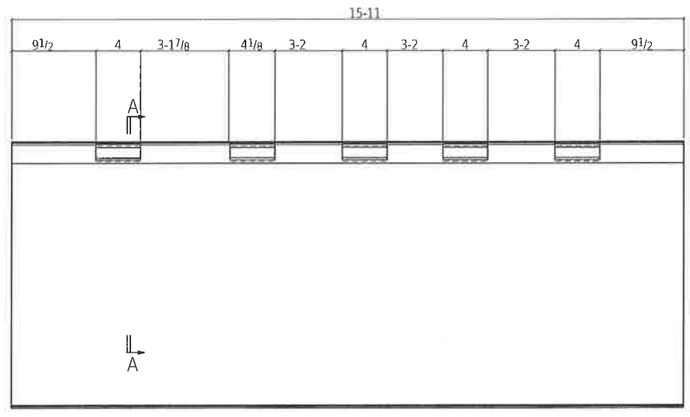

ONE PL 3/4x359 5/8x15-11 bp29

GRADE: A36

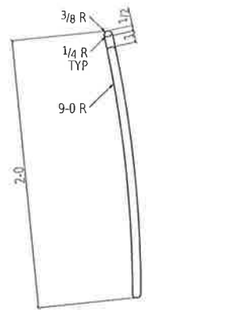

Section A-A

bp29

TOLERANCES:

(UNLESS OTHERWISE SPECIFIED)
3 PLACE DECIMALS +/- .01
2 PLACE DECIMALS +/- .03
FRACTIONS +/- 1/16
ANGLES +/- 2 DEGREES
MACHINE FINISHES 125 √ U.N.

REV	DESCRIPTION	BY	CHK	DATE
0	FOR FABRICATION	KRH	KR	Jan 6 2015

NOTES:
1. ERECT ALL MEMBER WITH THE MARKED END IN THE SAME RELATIVE POSITION AS SHOWN ON THE ERECTION DRAWING.
2. B.O.S.=BOTTOM OF STEEL. ELEVATIONS REFERENCED (xxx-x x/x) ARE TOP OF STEEL.
3. PLEASE PROVIDE INFORMATION AND VERIFICATIONS INDICATED IN CLOUDED AREAS. CLOUDED NOTES WITH NO REMARKS FROM THE APPROVAL AUTHORITY WILL BE CONSIDERED AS AN AFFIRMATION.

DETAILING: FABRICATION TECHNICAL SERVICES, INC.
www.FTSsteeldetailing.com
CONTACT Kevin@FTSsteeldetailing.com
ph. (208) 457-8282

JESSE ENGINEERING CO.
1840 Marine View Drive, Tacoma, Washington 98422 Ph. 253-922-7433

REF: SHEETS A600-620

PROJECT: IFA HOLLIS/CLARK BAY FERRY TERMINAL IMPROVEMENTS
CONTRACTOR: WESTERN MARINE CONSTRUCTION
DESCRIPTION: INTERMEDIATE RAMP PARTS
DATE: 01-06-15
FABRICATOR JOB NO: 203960
DRG NO: G604

Jan 06 2015 06:37:48 PM SHEET SIZE 24X36 JOB NO ####

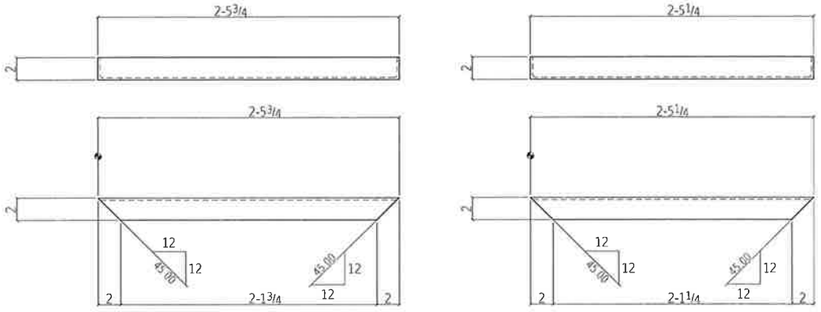

2 L2x2x3/16x2-5 3/4 a24

GRADE: A36

2 L2x2x3/16x2-5 1/4 a31

GRADE: A36

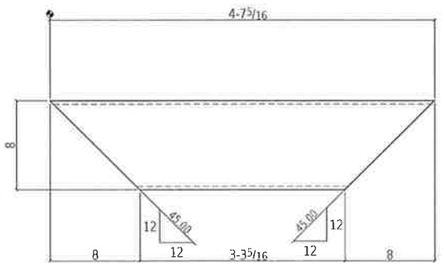

2 HSS8x8x5/16x4-7 5/16 t24

GRADE: A500B

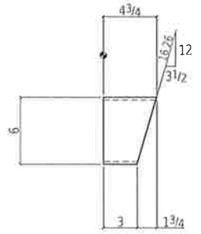

ONE HSS6x4x1/4x0-4 3/4 t29

GRADE: A500B

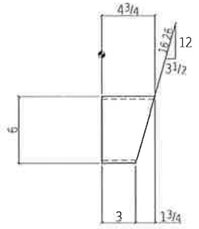

ONE HSS6x4x1/4x0-4 3/4 t39

GRADE: A500B

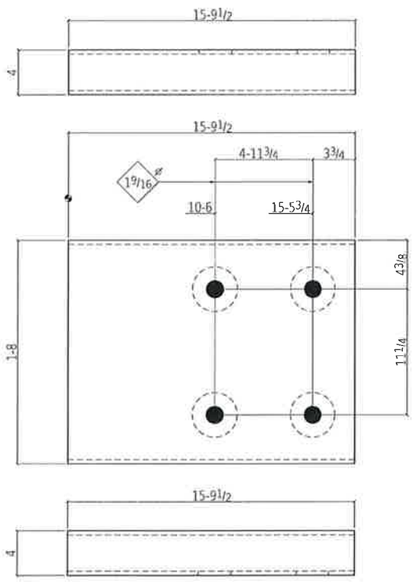

ONE HSS20x4x3/8x15-9 1/2 t15

GRADE: A500B

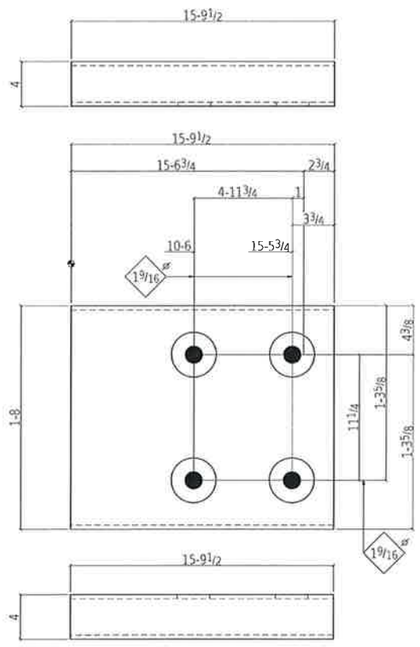

ONE HSS20x4x3/8x15-9 1/2 t18

GRADE: A500B

Record Drawings have been reviewed by the Project Engineer, and represent to the best of my knowledge, the project as constructed.

PE _____ Date 12/10/15

Jan 07 2015 04:14:57 PM SHEET SIZE: 24X36 JOB NO: ####

TOLERANCES:

(UNLESS OTHERWISE SPECIFIED)
3 PLACE DECIMALS +/- .01
2 PLACE DECIMALS +/- .03
FRACTIONS +/- 1/16
ANGLES +/- 2 DEGREES
MACHINE FINISHES 125 √U.N.

REV	DESCRIPTION	BY	CHK	DATE
0	FOR FABRICATION	XRH	KB	Jan 6 2015

NOTES:
1. ERECT ALL MEMBER WITH THE MARKED END IN THE SAME RELATIVE POSITION AS SHOWN ON THE ERECTION DRAWING.
2. B.O.S.=BOTTOM OF STEEL. ELEVATIONS REFERENCED (xxx-x x/x) ARE TOP OF STEEL.
3. PLEASE PROVIDE INFORMATION AND VERIFICATIONS INDICATED IN CLOUDED AREAS. CLOUDED NOTES WITH NO REMARKS FROM THE APPROVAL AUTHORITY WILL BE CONSIDERED AS AN AFFIRMATION.

DETAILING: FABRICATION TECHNICAL SERVICES, INC.
www.FTSsteeldetailing.com
CONTACT: Kevin@FTSsteeldetailing.com
ph: (208) 457-8282

JESSE ENGINEERING CO.
1840 Marine View Drive, Tacoma, Washington 98422 Ph. 253-922-7433

REF: SHEETS A600-620

PROJECT: IFA HOLLIS/CLARK BAY FERRY TERMINAL IMPROVEMENTS
CONTRACTOR: WESTERN MARINE CONSTRUCTION
DESCRIPTION: INTERMEDIATE RAMP PARTS
DATE: 01-06-15
FABRICATOR JOB NO: 203960
DWG NO: G605

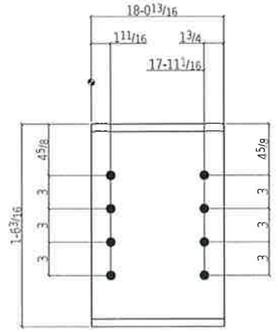

2 W18x76x18-0 13/16 w15

GRADE: A992

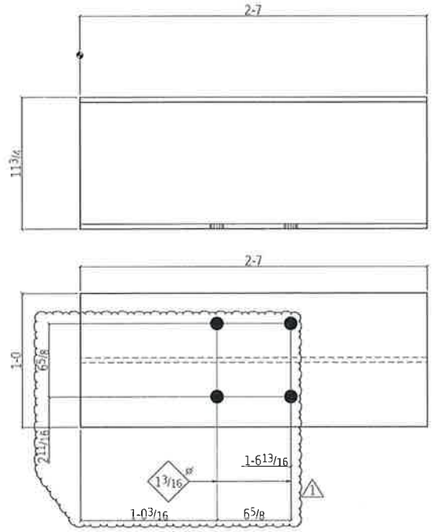

2 HP12X53x2-7 w2

GRADE: A992

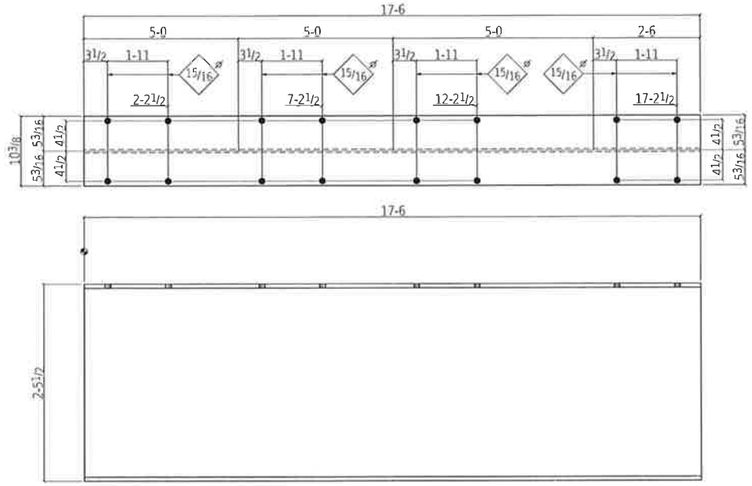

ONE W30x90x17-6 w24

GRADE: A992

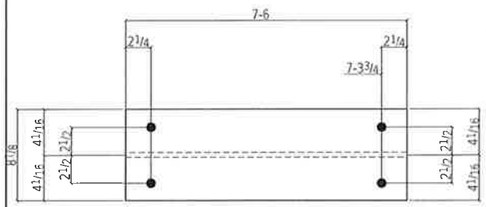

ONE HP8X36x7-6 w25

GRADE: A992

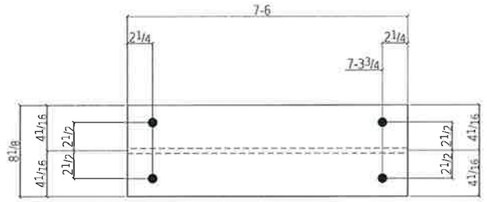

ONE HP8X36x7-6 w27

GRADE: A992

Record Drawings have been reviewed by the Project Engineer, and represent to the best of my knowledge, the project as constructed.

PE [signature] Date 12/10/15

FOR FABRICATION

Dave Hankins 1-23-15

TOLERANCES:

(UNLESS OTHERWISE SPECIFIED)
3 PLACE DECIMALS +/- .01
2 PLACE DECIMALS +/- .03
FRACTIONS +/- 1/16
ANGLES +/- 2 DEGREES
MACHINE FINISHES 125 √U.N.

REV	DESCRIPTION	BY	CHK	DATE
1	ACTUATOR CIMS	MRH	KB	Jan 20 2015
0	FOR FABRICATION	RRH	KB	Jan 6 2015

NOTES:
1. ERECT ALL MEMBER WITH THE MARKED END IN THE SAME RELATIVE POSITION AS SHOWN ON THE ERECTION DRAWING.
2. B.O.S.=BOTTOM OF STEEL. ELEVATIONS REFERENCED (xxx-x x/x) ARE TOP OF STEEL.
3. PLEASE PROVIDE IMFORMATION AND VERIFICATIONS INDICATED IN CLOUDED AREAS. CLOUDED NOTES WITH NO REMARKS FROM THE APPROVAL AUTHORITY WILL BE CONSIDERED AS AN AFFIRMATION.

DETAILING: FABRICATION TECHNICAL SERVICES, INC.
www.FTSsteeldetailing.com
CONTACT: Kevin@FTSsteeldetailing.com
ph: (208) 457-8282

JESSE ENGINEERING CO.

1840 Marine View Drive, Tacoma, Washington 98422 Ph. 253-922-7433

REF: SHEETS A600-620

PROJECT: IFA HOLLIS/CLARK BAY FERRY TERMINAL IMPROVEMENTS

CONTRACTOR: WESTERN MARINE CONSTRUCTION

DESCRIPTION: INTERMEDIATE RAMP PARTS

DATE: 01-06-15

FABRICATOR JOB NO: 203960

DWG NO: G606

JOB NO ###
SHEET SIZE 24X36
04 35 01 PM
Jan 20 2015

67449 / 504(14) New Hydraulic Lift System

HYDRAULIC HOSE LIST

QTY.	PART NUMBER	DESCRIPTION	MANUFACTURER	ITEM
2	F302-39-06-12-12-12-44	APRON HPU HYDRAULIC HOSE	PARKER	1H
2	F302-39-06-12-12-12-40	LOCK HPU HYDRAULIC HOSE	PARKER	2H
2	F302-39-06-12-12-12-37.25	RAMP HPU HYDRAULIC HOSE	PARKER	3H
7	F451TC-06-06-12-12-12C-73	HPU JUMPER HOSES	PARKER	4H
				5H
6	F451TC-06-06-12-12-12C-31	APRON JUMPER HOSES	PARKER	6H
				7H
8	F451TC-06-06-12-12-12C-44	RAMP & LOCK JUMPER HOSES	PARKER	8H
				9H
1	F451TC-39-39-16-16-16-35.0 0 DEG	HPU PRESSURE HOSE	PARKER	10H
1	F302-39-06-08-08-08-17.5	HPU CASE DRAIN HOSE	PARKER	11H
1	F451TC-06-39-16-16-16-19.5	HPU RETURN HOSE	PARKER	12H

CYLINDER & TUBE FITTING LIST

QTY.	PART NUMBER	DESCRIPTION	MANUFACTURER	ITEM
4	J12-16GE-45	APRON CYLINDER FITTINGS	SSP	
4	J-12GC	RAMP CYLINDER FITTINGS	SSP	
2	DLO-8-8-SS	LOCK CYLINDER FITTINGS	BILOK	
2	DRE-12-8-SS	LOCK CYLINDER FITTING	BILOK	
18	DUA-12-12-SS	TUBE UNIONS	BILOK	
6	DTA-12-12-SS	TUBE TEES	BILOK	
4	DUC-12-12-SS	TUBE TO HOSE TERMINATION FITTINGS	BILOK	
4	DCU-12-12-SS	TUBE TO HOSE TERMINATION FITTINGS	BILOK	
4	DCU-6-6-SS	TUBE TO HOSE TERMINATION FITTINGS	BILOK	
4	DRE-12-6-SS	TUBE TO HOSE TERMINATION FITTINGS	BILOK	
6	DUE-12-12-SS	TUBE TO HOSE TERMINATION FITTINGS	BILOK	

SHIP LOOSE COMPONENTS

QTY.	PART NUMBER	DESCRIPTION	MANUFACTURER	ITEM
2	APRON ACTUATOR 1H000036394	APRON ACTUATOR CYLINDER 7" BORE X 54" STROKE	PARKER	44
				45
2	RAMP ACTUATOR 1H000036408	RAMP ACTUATOR CYLINDER, 7" BORE X 60" STROKE W/ KNUCKLE & MOUNTING BRACKET	PARKER	46
				47
1	LOCK-OFF PIN LEFT 1H000036413	LOCK-OFF PIN ACTUATOR, 2" BORE X 4" STROKE W/ MOUNTING CLEVIS	PARKER	48
1	LOCK-OFF PIN RIGHT 1H000036421	LOCK-OFF PIN ACTUATOR, 2" BORE X 4" STROKE	PARKER	49
				50
1	MM-2845-01	APRON CYLINDER MANIFOLD, RH	WIT	51
1	MM-2846-01	APRON CYLINDER MANIFOLD, LH	WIT	52
4	SV12-28-0-N-00	POPPET CARTRIDGE VALVE, N.C. 2-WAY	HYDRAFORCE	53
4	6365115	COIL, 115V	HYDRAFORCE	54
4	CBEA-LHN	COUNTERBALANCE VALVE	SUN	55
2	Y V V	VALVE BODY	SUN	56
2	XBOA-XXN	CAVITY PLUG	SUN	57

HPU LIST OF MATERIALS

QTY.	PART NUMBER	DESCRIPTION	MANUFACTURER	ITEM
1	LM16762	ELECTRIC MOTOR, 15HP / 1800RPM / TEFC 254TC / 60HZ / 3PH	LINCOLN	1
				2
1	M30010008	COUPLING HALF, 1" X 1/4"	MAGNALOY	3
1	M30012012	COUPLING HALF, 1 5/8" X 3/8"	MAGNALOY	4
1	M370H5	COUPLING INSERT, HYTREL	MAGNALOY	5
1	M182582B-45	PUMP/MOTOR ADAPTER	MAGNALOY	6
1	MA10VSO45DFR/31R-PKC62N00	AXIAL PISTON PUMP	METARIS	7
1	CS#16-1-7	1" CHECK VALVE	ANCHOR	8
1	25-1009SWL02L03000	PRESSURE GAUGE, 0-3000PSI	ASHCROFT	9
1	NSAB-KXV-AS	GAUGE SNUBBER	SUN	10
				11
1	RPGC-LAN	RELIEF VALVE	SUN	12
				13
1	WR-2699-01	RESERVOIR, STAINLESS STEEL 60 GALLON	WIT	14
2	RECS12KX	STAINLESS STEEL END COVER WITH MOUNTING KIT	MAGNALOY	15
				16
1	PLLG-05T	SIGHT GAUGE W/ THERMOMETER	MAGNALOY	17
1	934331T	DESICCANT BREATHER	PARKER	18
				19
				20
1	SLFE-500-108P	SUCTION FLANGE KIT 1-1/2"	MAGNALOY	21
1	BVAL-0500N-4321-ZZZN	BALL VALVE, 1/2" NPT	DMIC	22
1	RTF48G05BTT25S1V/X	RETURN FILTER	STAUFF	23
1	RTE48G05B/X	FILTER ELEMENT	STAUFF	24
				25
1	AD05HP033S/S	D-05 3-STATION MANIFOLD	DAMAN	26
1	VSD05M-3F-GB-60L	DIRECTIONAL VALVE, 4/3	CONTINENTAL	27
1	D3W4CNYC	DIRECTIONAL VALVE, 4/3	PARKER	28
1	VSD05M-5F-GB-60L	DIRECTIONAL VALVE, 4/2	CONTINENTAL	29
2	DBY	VALVE BODY, D05 SANDWICH, T-5A	SUN	30
4	NCEB-LAN	FLOW CONTROL VALVE	SUN	31
1	W8S	VALVE BODY, D05 SANDWICH, T-10A	SUN	32
1	RDDA-LAN	RELIEF VALVE	SUN	33
1	DBP	VALVE BODY, D05 SANDWICH, T-5A	SUN	34
1	CXFA-XAN	CHECK VALVE T-5A	SUN	35
1	CBA	VALVE BODY, D05 SANDWICH, T-3A	SUN	36
1	RPGC-LBN	RELIEF VALVE, T-3A	SUN	37
1	BGS713J6W4	TANK HEATER, 1.5KW, 120-240V W/ THERMOSTAT	WATLOW	38
1	CS#24-1-7	1 1/2" CHECK VALVE	ANCHOR	39
1	WM-1853-01	NEMA 12 STAINLESS STEEL ENCLOSURE, 72" X 60" X 36"	WIT	40
1	1838701	NEMA 4X-SS ELECTRICAL ENCLOSURE W/ STARTER DISCONNECT	ANDERSON ELECTRIC	41
				42
				43

Record Drawings have been reviewed by the Project Engineer, and represent to the best of my knowledge, the project as constructed.

PE _____ Date 12/10/15

REV.	DATE	DESCRIPTION	BY
-	-	-	-
-	-	-	-
-	-	-	-
-	-	-	-
-	-	-	-
-	-	-	-
-	-	-	-
-	-	-	-

WESTERN INTEGRATED TECHNOLOGIES
PORTLAND, OR · BOISE, ID · SALT LAKE CITY, UT
LOS ANGELES, CA · PASCO, WA · BELLEVUE, WA
SACRAMENTO, CA · DENVER, CO · TUKWILA, WA
www.westernintech.com

THIS DRAWING AND DESIGN HEREIN IS THE PROPERTY OF WESTERN INTEGRATED TECHNOLOGIES AND MAY NOT BE USED OR COPIED WITHOUT PERMISSION OF WESTERN INTEGRATED TECHNOLOGIES

JOB / ASSY.	1465
CUSTOMER	JESSE ENGINEERING
LOCATION	TACOMA, WA
S.O. #	1469017
PROD. #	1035311
P.O.#	
PROJECT	-
-	-
-	-

SCALE:

TOLERANCES EXCEPT AS NOTED
.X = ± .030
.XX = ± .015
.XXX = ± .005
FRAC. = ± 1/32
ANGLES = ± 1°

MATERIAL:

		DATE
DRAWN BY	M. THEBAULT	11/07/14
ENG. BY	M. THEBAULT	11/07/14
CHECKED BY	-	-
APPROVED BY	-	-
-	-	-
-	-	-
WEIGHT	-	

SUBTITLE: HYDRAULIC SCHEMATIC

DWG. TITLE: CLARK BAY FERRY TERMINAL
HYDRAULIC POWER UNIT
FERRY TERMINAL REPLACEMENT

DWG. SIZE: B | DWG. NO: HS-2688-01 | REV: B | SHEET 1 OF 2

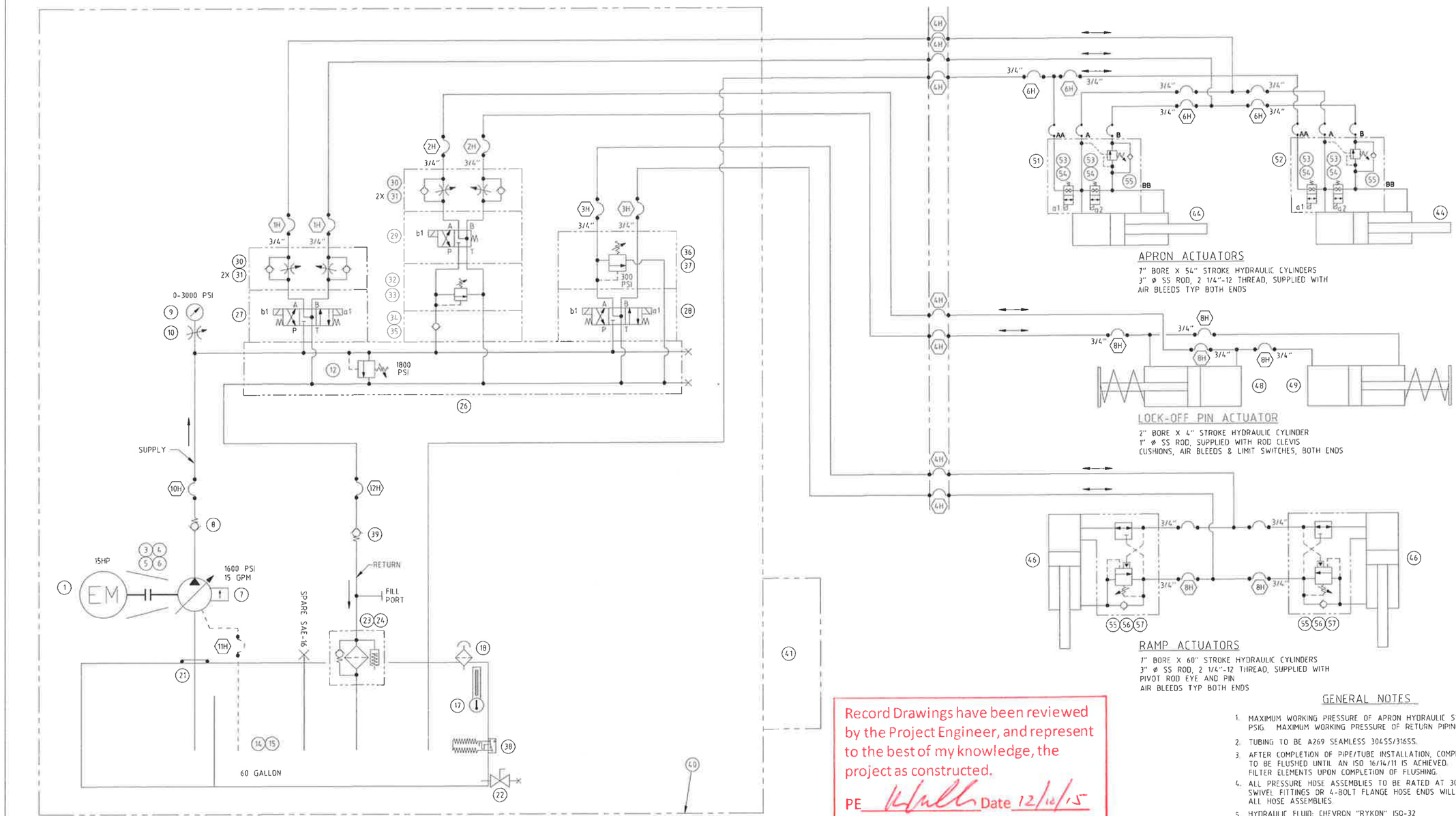

Record Drawings have been reviewed by the Project Engineer, and represent to the best of my knowledge, the project as constructed.

PE _____ Date 12/16/15

GENERAL NOTES

1. MAXIMUM WORKING PRESSURE OF APRON HYDRAULIC SYSTEM IS 3000 PSIG. MAXIMUM WORKING PRESSURE OF RETURN PIPING IS 250 PSIG.
2. TUBING TO BE A269 SEAMLESS 304SS/316SS.
3. AFTER COMPLETION OF PIPE/TUBE INSTALLATION, COMPLETE SYSTEM TO BE FLUSHED UNTIL AN ISO 16/14/11 IS ACHIEVED. REPLACE FILTER ELEMENTS UPON COMPLETION OF FLUSHING.
4. ALL PRESSURE HOSE ASSEMBLIES TO BE RATED AT 3000PSI. JIC SWIVEL FITTINGS OR 4-BOLT FLANGE HOSE ENDS WILL BE USED ON ALL HOSE ASSEMBLIES
5. HYDRAULIC FLUID: CHEVRON "RYKON" ISO-32

REV.	DATE	DESCRIPTION	BY
A	1/8/15	ADDED ITEMS 31 & 32	CMG

WESTERN INTEGRATED TECHNOLOGIES
PORTLAND, OR · LOS ANGELES, CA · SACRAMENTO, CA · BOISE, ID · PASCO, WA · DENVER, CO · SALT LAKE CITY, UT · BELLEVUE, WA · TUKWILA, WA
www.westernintech.com

THIS DRAWING AND DESIGN HEREIN IS THE PROPERTY OF WESTERN INTEGRATED TECHNOLOGIES AND MAY NOT BE USED OR COPIED WITHOUT PERMISSION OF WESTERN INTEGRATED TECHNOLOGIES

JOB / ASSY.	1465
CUSTOMER	JESSE ENGINEERING
LOCATION	TACOMA, WA
S.O. #	1469017
PROD. #	1035311
P.O.#	
PROJECT	-

SCALE:

TOLERANCES EXCEPT AS NOTED
.X = ± .030
.XX = ± .015
.XXX = ± .005
FRAC. = ± 1/32
ANGLES = ± 1°

MATERIAL:

		DATE
DRAWN BY	M. THEBAULT	11/07/14
ENG. BY	M. THEBAULT	11/07/14
CHECKED BY	-	-
APPROVED BY	-	-
-	-	-
-	-	-
WEIGHT	-	

SUBTITLE: HYDRAULIC SCHEMATIC

DWG. TITLE: CLARK BAY FERRY TERMINAL
HYDRAULIC POWER UNIT
FERRY TERMINAL REPLACEMENT

DWG. SIZE: B | DWG. NO: HS-2688-01 | REV: B | SHEET 2 OF 2

THIS DRAWING AND ALL SPECIFICATIONS HEREIN, ARE PROPERTY OF ANDERSON ELECTRIC CONTROLS, INC.. IT SHALL NOT BE REPRODUCED, COPIED, OR USED IN WHOLE OR IN PART, AS THE BASIS FOR MANUFACTURE OR SALE OF ITEMS WITHOUT WRITTEN PERMISSION.

QTY.	PART NO.	DESCRIPTION	MFR	PIECE

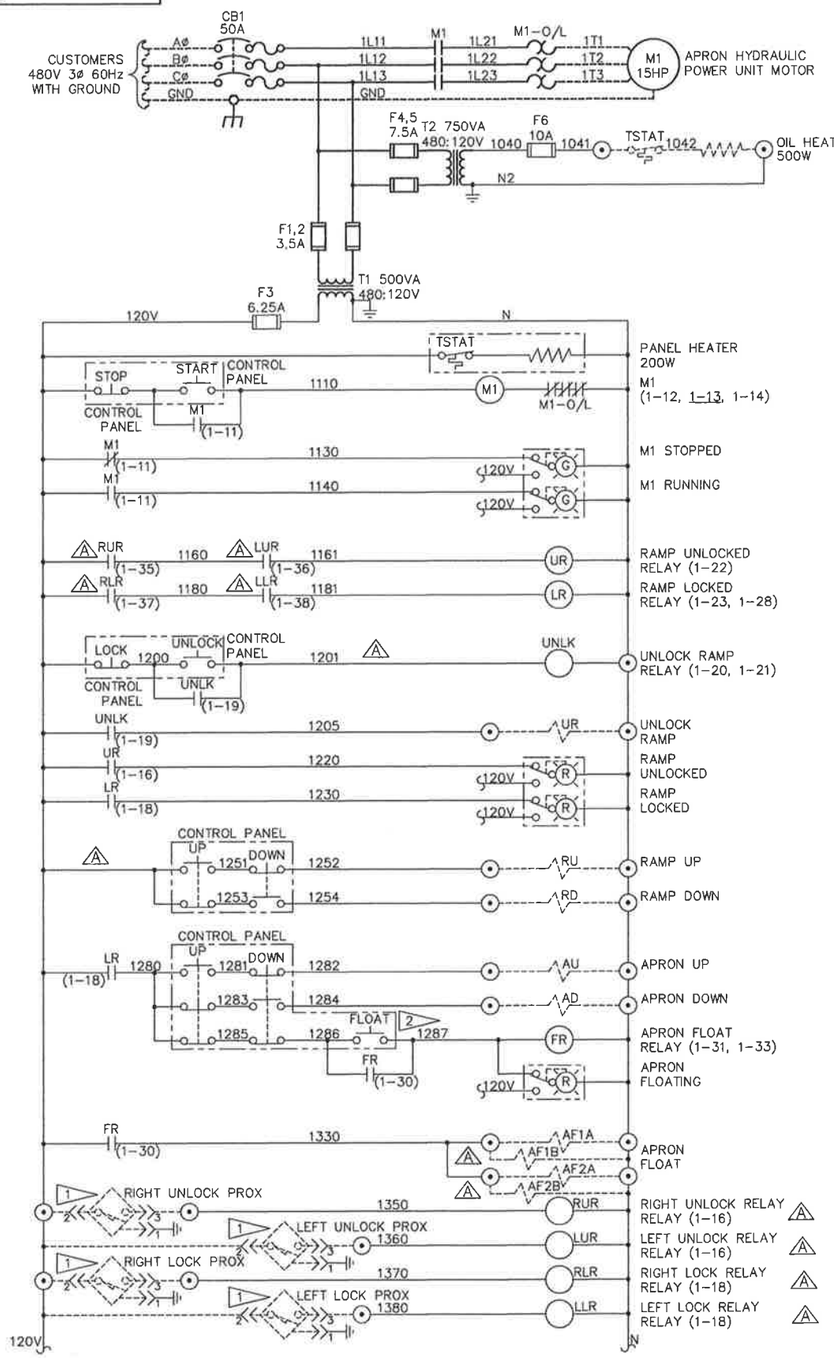

NOTES:

1. PROXIMITY SWITCHES MUST BE GROUNDED.
2. APRON FLOAT PUSHBUTTON IS LOCKABLE.

Record Drawings have been reviewed by the Project Engineer, and represent to the best of my knowledge, the project as constructed.

PE K Hall Date 12/10/15

REV.	DESCRIPTION	DATE	APPROVED
A	CHANGE LOCK/UNLOCK PB CIRCUIT, DELETE UR CONTACT @ 1-25, ADD 'B' APRON FLOAT SOLENOIDS, CHANGE LOCK/UNLOCK LIMITS TO PROX SWITCHES AND ADD RELAYS, ADD FLAG 2	6/8/15	DMM/DS

REVISIONS

ANDERSON ELECTRIC CONTROLS INC.
ELECTRICAL/ELECTRONIC POWER AND AUTOMATED CONTROL SYSTEMS
8639 S. 212th ST. KENT WA. 98031 (253) 395-3003

	DATE
DRAWN D.MORGAN	11/4/14
CHECKED	
ENGINEER D.SHULL	11/4/14

DWG TITLE: CLARK BAY FERRY TERMINAL CONTROL STATION SCHEMATIC

DWG NO.: 1838701

SHEET 1 OF 1

ACAD FILENAME: 1838701

SCALE 1:1

D SIZE



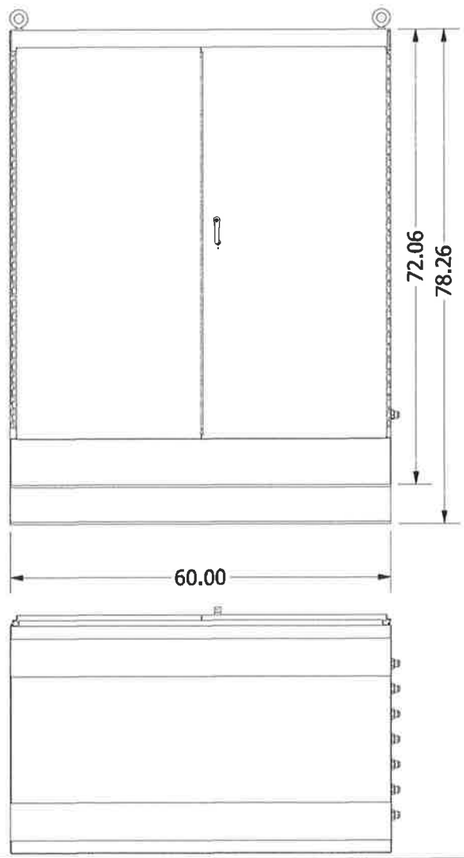

HPU DETAIL SHOWN
ON PAGE 2

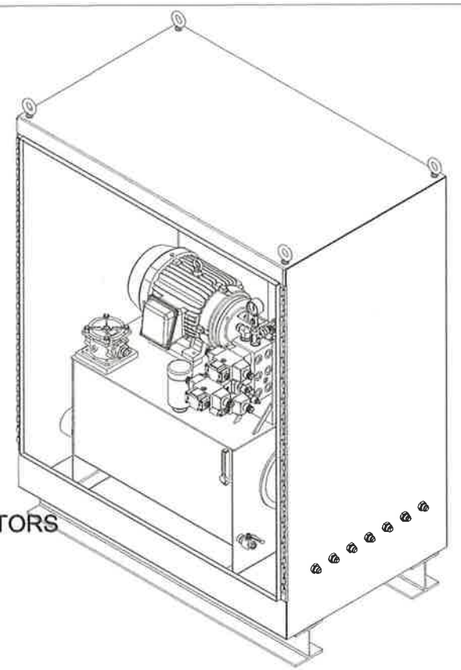

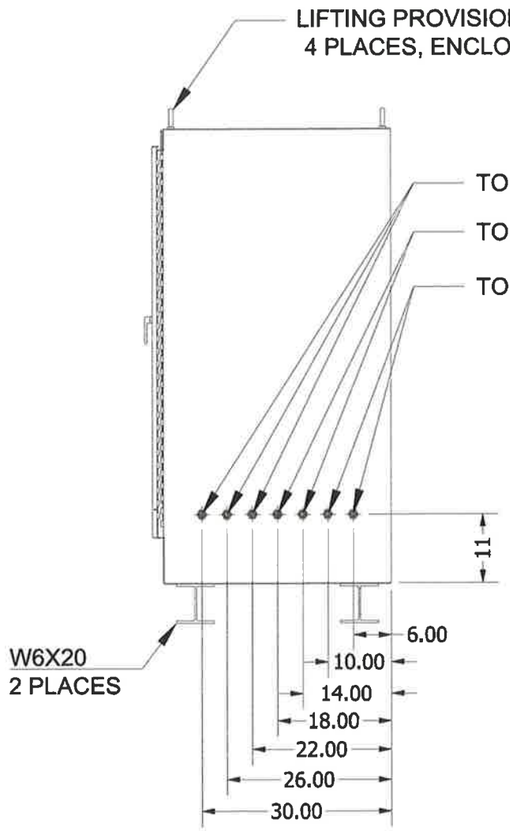

Record Drawings have been reviewed by the Project Engineer, and represent to the best of my knowledge, the project as constructed.

PE _____ Date 12/10/15

REV.	DATE	DESCRIPTION	BY
A	1/8/2015	ADDED ITEMS 27 & 28	CMG
B	7/20/2015	MOVED HEATER LOCATION, ADDED 90 FITTING TO DRAIN, ADDED ITEM 29	ZDJ
-	-	-	-
-	-	-	-
-	-	-	-
-	-	-	-
-	-	-	-
-	-	-	-

WESTERN INTEGRATED TECHNOLOGIES
PORTLAND, OR · BOISE, ID · SALT LAKE CITY, UT
LOS ANGELES, CA · PASCO, WA · BELLEVUE, WA
SACRAMENTO, CA · DENVER, CO · TUKWILA, WA
www.westernintech.com

THIS DRAWING AND DESIGN HEREIN IS THE PROPERTY OF WESTERN INTEGRATED TECHNOLOGIES AND MAY NOT BE USED OR COPIED WITHOUT PERMISSION OF WESTERN INTEGRATED TECHNOLOGIES

JOB / ASSY.	1465
CUSTOMER	JESSE ENGINEERING CO
LOCATION	TACOMA WA
S.O. #	1469017
PROD. #	1035311
P.O.#	203980-56425
PROJECT	-
-	-
-	-

SCALE:

TOLERANCES EXCEPT AS NOTED
.X = ± .030
.XX = ± .015
.XXX = ± .005
FRAC. = ± 1/32
ANGLES = ± 1°

MATERIAL:

		DATE
DRAWN BY		
ENG. BY		
CHECKED BY	-	-
APPROVED BY	-	-
-	-	-
-	-	-
WEIGHT	-	

SUBTITLE: CLARK BAY FERRY TERMINAL

DWG. TITLE: HYDRAULIC POWER UNIT

DWG. SIZE: B | DWG. NO: HA-2694-01B | REV: B | SHEET 1 OF 2

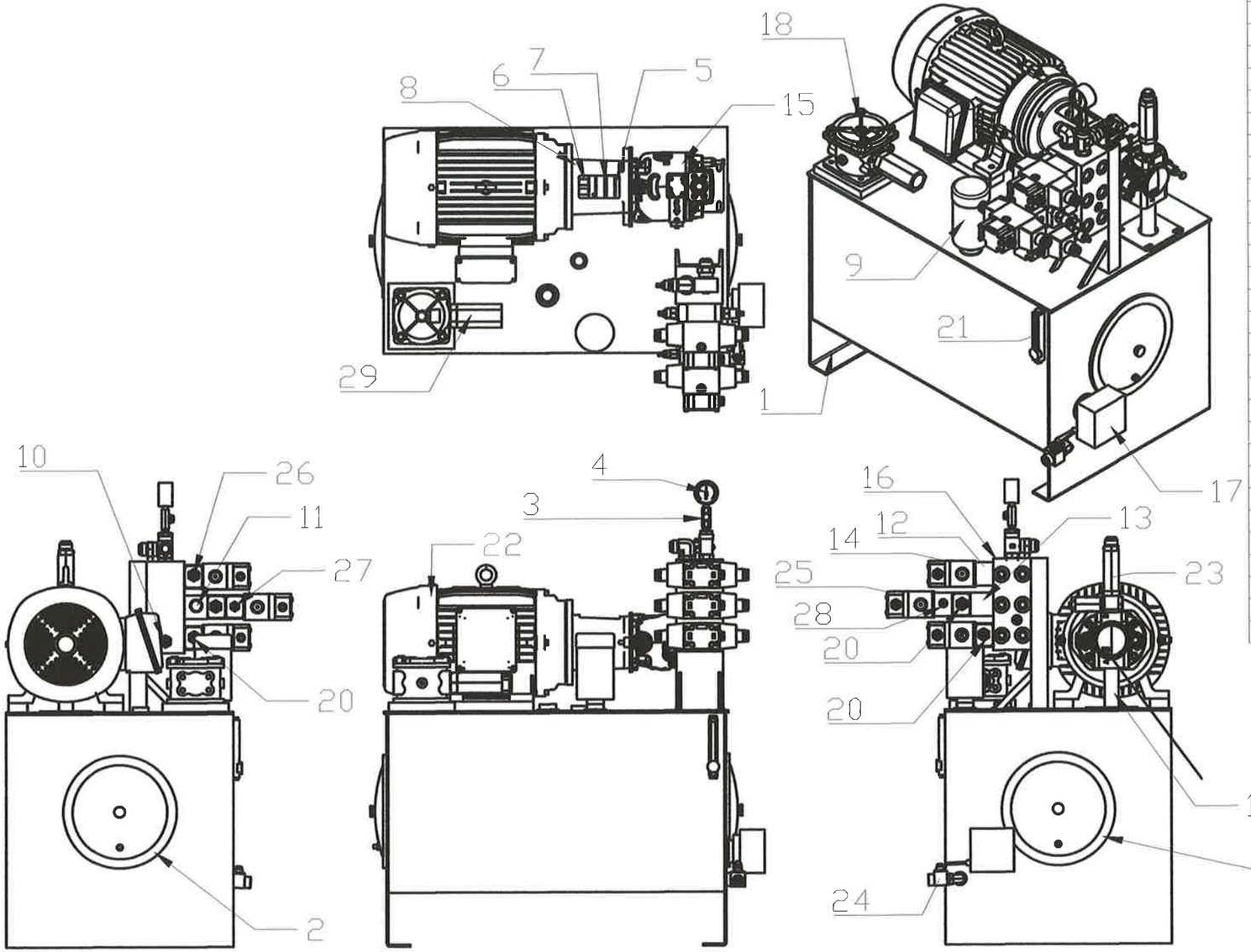

QTY.	PART NUMBER	DESCRIPTION	MANUFACTURER	ITEM
1	WM2699	RESERVOIR	WIT	1
2	REC12KX	END COVER	MAGNALOY	2
1	NSAB-KXV-AS	GAUGE SNUBBER	SUN	3
1	25-1009SWL02L03000	PRESSURE GAUGE	ASHCROFT	4
1	M30010008	DRIVE COUPLING HUB	MAGNALOY	5
1	M30012012	DRIVE COUPLING HUB	MAGNALOY	6
1	M370H5	COUPLING INSERT	MAGNALOY	7
1	M182582B-45	PUMP-MOTOR ADAPTER	MAGNALOY	8
1	934331T	DESSICANT BREATHER	PARKER	9
1	RPGC-LAN	RELIEF VALVE	SUN	10
1	CXFA-XAN	CHECK VALVE	SUN	11
1	CBA	RELIEF VALVE BODY	SUN	12
1	DBP	CHECK VALVE BODY	SUN	13
3	VSD05M-3F-GB-60L	DIRECTIONAL CONTROL VALVE	CONTINENTAL	14
1	MA10VSO45DFR31/R-PKC62N00	AXIAL PISTON PUMP	METARIS	15
1	AD05HP033S/S	MANIFOLD	DAMAN	16
1	BGS713J6W4	RESERVOIR HEATER	WATLOW	17
1	RTF48G05BTT25S1V	RETURN LINE FILTER	STAUFF	18
2	DBY	FLOW CONTROL BODY	SUN	19
4	NCEB-LAN	FLOW CONTROL	SUN	20
1	PLLG-05T	LIQUID LEVEL GAUGE W/ THERMOMETER	MAGNALOY	21
1	LM16762	15 HP, 1800 RPM, 230/460/3/60 254TC MOTOR	LINCOLN	22
1	CS#16-1-7	CHECK VALVE #16 SAE	ANCHOR	23
1	BVAL-0500N-4321-ZZZN	1/2" LOW PRESSURE BALL VALVE	DMIC	24
1	VSD05M-5F-GB-60L	DIRECTIONAL CONTROL VALVE	CONTINENTAL	25
1	RPGC-LBN	RELIEF VALVE	SUN	26
1	RDDA-LAN	RELIEF VALVE	SUN	27
1	W8S	RELIEF VALVE	SUN	28
1	CS#24-1-7	CHECK VALVE	ANCHOR	29

Record Drawings have been reviewed by the Project Engineer, and represent to the best of my knowledge, the project as constructed.

PE KWells Date 12/10/15

REV.	DATE	DESCRIPTION	BY
A	1/8/2015	ADDED ITEMS 27 & 28	CMG
B	7/20/2015	MOVED HEATER LOCATION, ADDED 90 FITTING TO DRAIN, ADDED ITEM 29	ZDJ
-	-	-	-
-	-	-	-
-	-	-	-
-	-	-	-
-	-	-	-
-	-	-	-

WESTERN INTEGRATED TECHNOLOGIES
PORTLAND, OR LOS ANGELES, CA SACRAMENTO, CA BOISE, ID PASCO, WA DENVER, CO SALT LAKE CITY, UT BELLEVUE, WA TUKWILA, WA
www.westernintech.com

THIS DRAWING AND DESIGN HEREIN IS THE PROPERTY OF WESTERN INTEGRATED TECHNOLOGIES AND MAY NOT BE USED OR COPIED WITHOUT PERMISSION OF WESTERN INTEGRATED TECHNOLOGIES

JOB / ASSY.	1465
CUSTOMER	JESSE ENGINEERING CO
LOCATION	TACOMA WA
S.O. #	1469017
PROD. #	1035311
P.O.#	203960-56425
PROJECT	-
-	-
-	-

SCALE:

TOLERANCES EXCEPT AS NOTED
.X = ± .030
.XX = ± .015
.XXX = ± .005
FRAC. = ± 1/32
ANGLES = ± 1°

MATERIAL:

DRAWN BY
ENG. BY
CHECKED BY -
APPROVED BY -
- -
- -
WEIGHT -

DATE

SUBTITLE: CLARK BAY FERRY/TERMINAL

DWG. TITLE: HYDRAULIC POWER UNIT

DWG. SIZE: B | DWG. NO: HA-2694-01B | REV: B | SHEET 2 OF 2

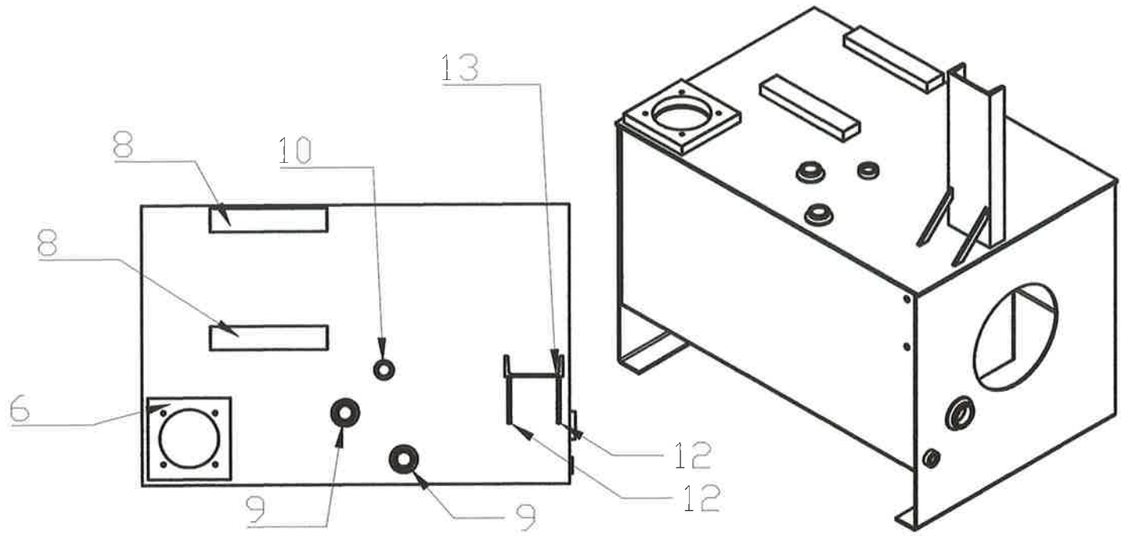

QTY.	PART NUMBER	DESCRIPTION	MANUFACTURER	ITEM
1		RESERVOIR BELLY		1
1		RESERVOIR SIDE 1		2
1		RESERVOIR SIDE 2		3
1		RESERVOIR TOP		4
1		1/2" NPT WELD FLANGE		5
1		FILTER WELD RING		6
1		RESERVOIR BAFFLE		7
2		MOTOR MOUNT		8
2		1" NPT WELD FLANGE		9
1		3/4" SOCKET WELD FLANGE		10
1		1 1/2" NPT WELD FLANGE		11
1		AISC - C5 X 6.7 - 16"		12
2		CHANNEL GUSSET		13

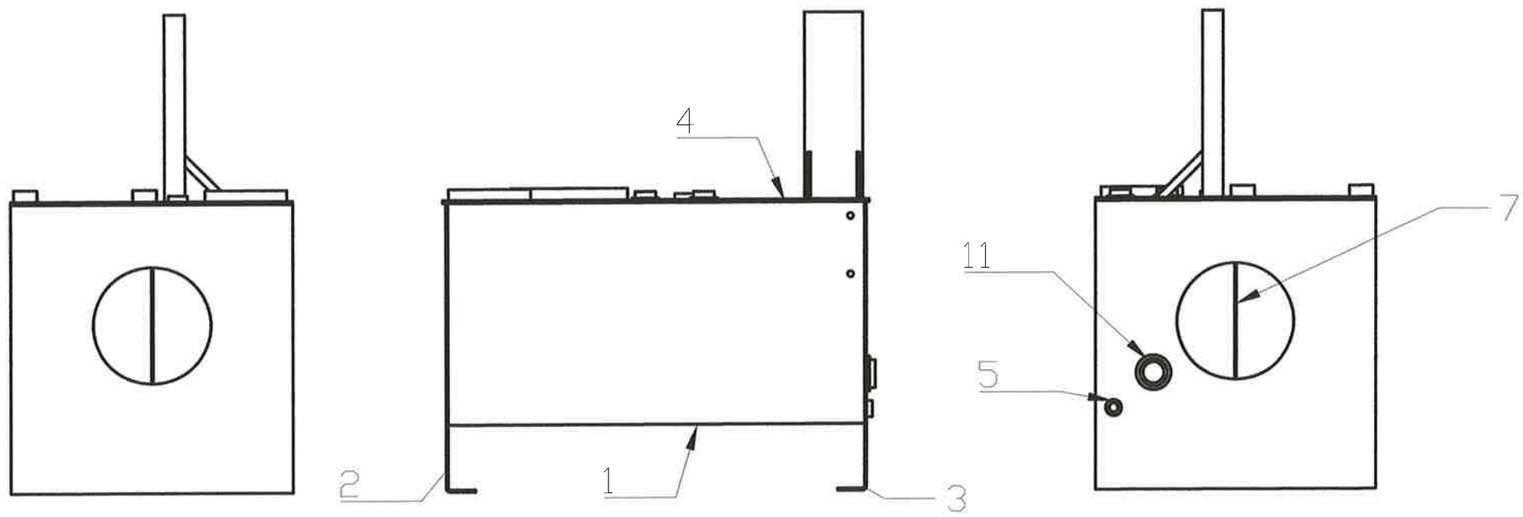

Record Drawings have been reviewed by the Project Engineer, and represent to the best of my knowledge, the project as constructed.

PE _____ Date 12/10/15

REV.	DATE	DESCRIPTION	BY
-	-	-	-
-	-	-	-
-	-	-	-
-	-	-	-
-	-	-	-
-	-	-	-
-	-	-	-
-	-	-	-

WESTERN INTEGRATED TECHNOLOGIES

PORTLAND, OR · LOS ANGELES, CA · SACRAMENTO, CA · BOISE, ID · PASCO, WA · DENVER, CO · SALT LAKE CITY, UT · BELLEVUE, WA · TUKWILA, WA

www.westernintech.com

THIS DRAWING AND DESIGN HEREIN IS THE PROPERTY OF WESTERN INTEGRATED TECHNOLOGIES AND MAY NOT BE USED OR COPIED WITHOUT PERMISSION OF WESTERN INTEGRATED TECHNOLOGIES

JOB / ASSY.	1465
CUSTOMER	JESSE ENGINEERING
LOCATION	TACOMA WA
S.O. #	1469017
PROD. #	1035311
P.O.#	203960-56425
PROJECT	-
-	-
-	-

SCALE:

TOLERANCES EXCEPT AS NOTED

.X = ± .030
.XX = ± .015
.XXX = ± .005
FRAC. = ± 1/32
ANGLES = ± 1°

MATERIAL:

		DATE
DRAWN BY		
ENG. BY		
CHECKED BY	-	-
APPROVED BY	-	-
-	-	-
-	-	-
WEIGHT	-	

SUBTITLE: CLARK BAY FERRY TERMINAL

DWG. TITLE:

60 GALLON STAINLESS STEEL RESERVOIR

DWG. SIZE:	DWG. NO:	REV:	SHEET
B	WR-2699-01	Ø	1 OF 1

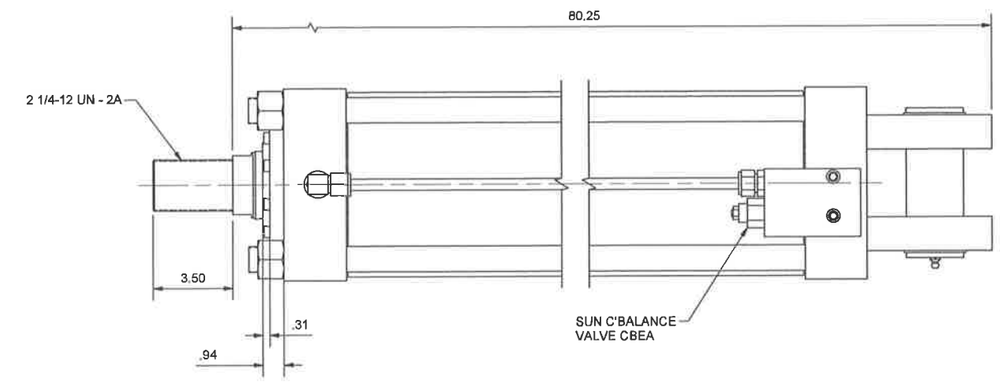

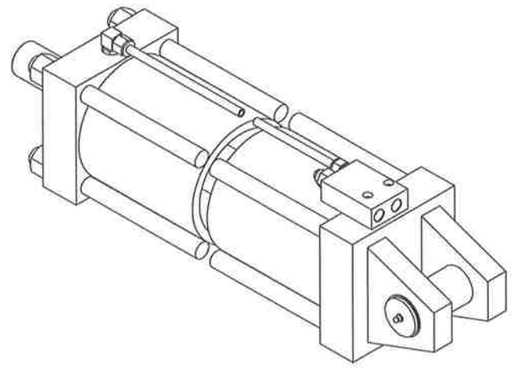

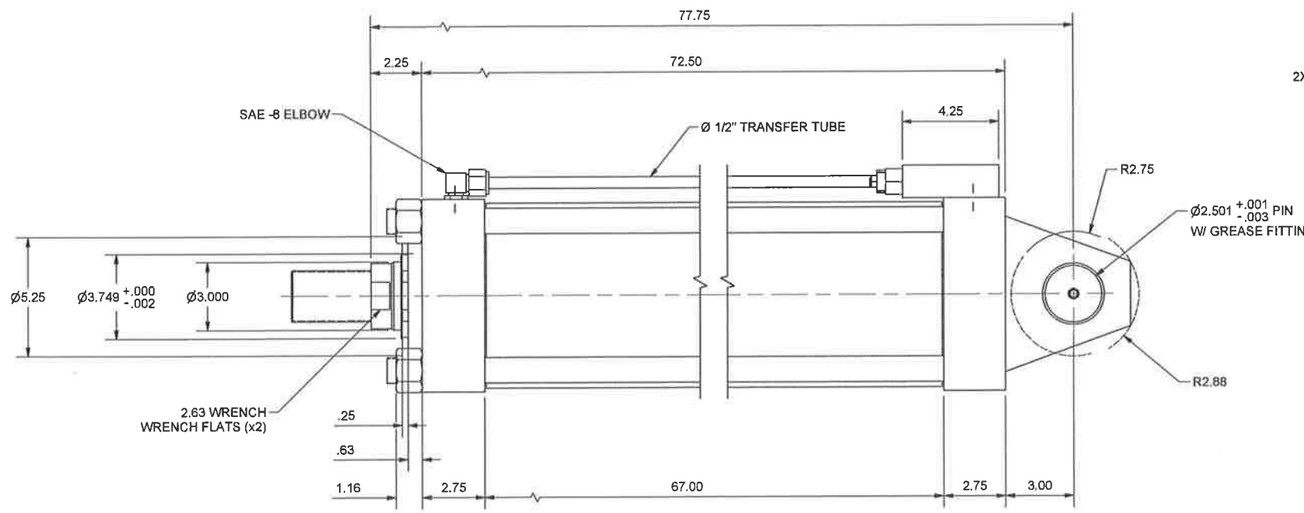

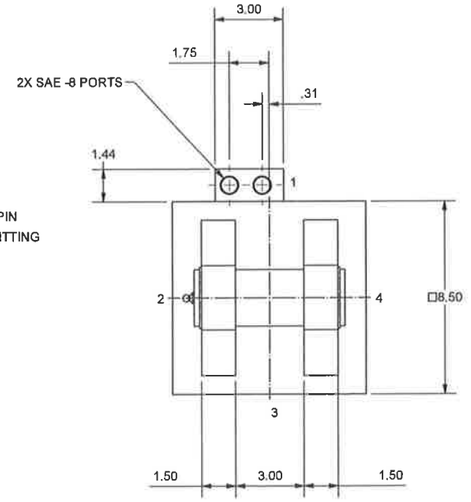

Record Drawings have been reviewed by the Project Engineer, and represent to the best of my knowledge, the project as constructed.

PE _____ Date 12/10/15

APPROVAL
Approved _____
Authorized By: _____
Company: _____
Date: ___/___/___

SERIES 2H HYDRAULIC CYLINDER		
STYLE BB MOUNTING		
BORE SIZE: 7.00		HEAD CAP
ROD DIA.: 3.00	PORTS AT POSITION:	1 1
THREAD STYLE: 4	NEEDLE VALVE AT POSITION:	- -
CUSHION: NONE	CHECK VALVE AT POSITION:	– –
STROKE: 64.00 TOTAL, 60.00 NET		

NOTES:

1. CLASS 1 SEALS
2. LIP SEAL PISTON
3. 17-4 STAINLESS STEEL, CHROME PLATED PISTON ROD
4. ONE PIECE (NON-WELDED CAP)
5. STOP TUBE HEAD END 4.00" LONG
6. COUNTER BALANCE VALVE CAP END
   CODE: BSDCEAHNA-2340
7. PAINT FOR SPLASH ZONE MARINE ENVIRONMENT

STANDARD ENVELOPE PRESSURE
3000 PSI

THIS DOCUMENT CONTAINS INFORMATION THAT IS CONFIDENTIAL AND PROPRIETARY TO PARKER HANNIFIN CORPORATION. THIS DOCUMENT IS FURNISHED ON THE UNDERSTANDING THAT THE DOCUMENT AND THE INFORMATION IT CONTAINS WILL NOT BE COPIED OR DISCLOSED TO OTHERS EXCEPT WITH THE WRITTEN CONSENT OF PARKER HANNIFIN. WILL NOT BE USED FOR ANY PURPOSE OTHER THAN CONDUCTING BUSINESS WITH PARKER HANNIFIN, AND WILL BE RETURNED AND ALL FURTHER USE DISCONTINUED UPON REQUEST BY PARKER HANNIFIN.

UNLESS OTHERWISE SPECIFIED, TOLS. AND FINISHES PER ES-938, GEOMETRIC TOLS. PER CURRENT ASME Y14.5M STANDARD.

©COPYRIGHT PARKER, ALL RIGHTS RESERVED, YEAR OF COPYRIGHT IS FIRST YEAR INDICATED ON THIS DOCUMENT

REV.	ECO	DATE
-	0086937	11/26/14

MATERIAL
HEAT TREATMENT

SCALE	DATE	DRAWN BY	CHK. BY	APPD. BY
1:4	11/26/14	PHJ	PHJ	

PARKER HANNIFIN CORP.
CYLINDER DIVISION
DES PLAINES, IL 60016

HYDRAULIC CYLINDER MODEL
7.00 BB-3HLTS14A X 64.00 BSDCEAHNA-2340

PART NO. 1H000036408
DRAWING NO. 1H000036408-1
REV. -

C

Autodesk Inventor

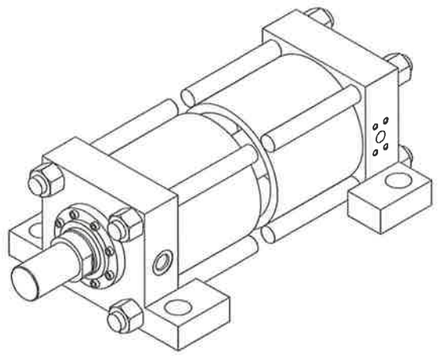

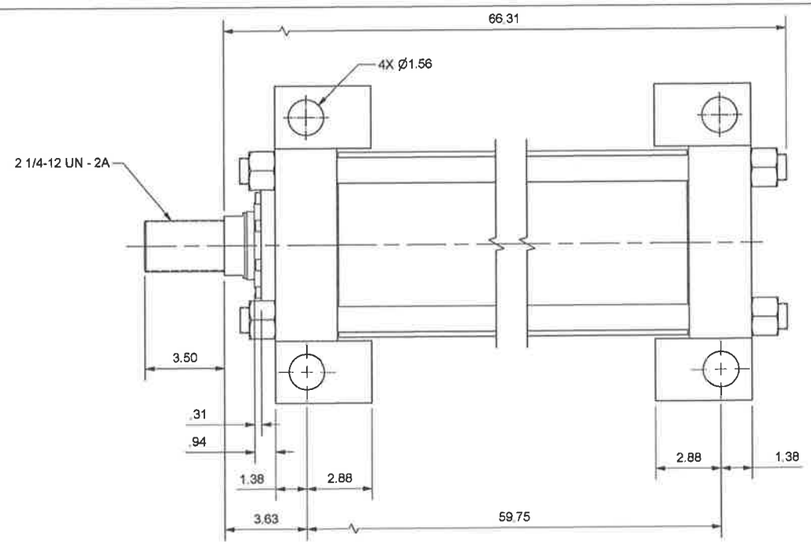

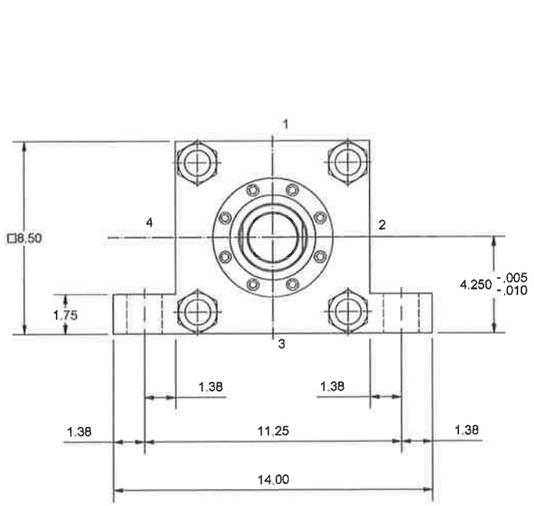

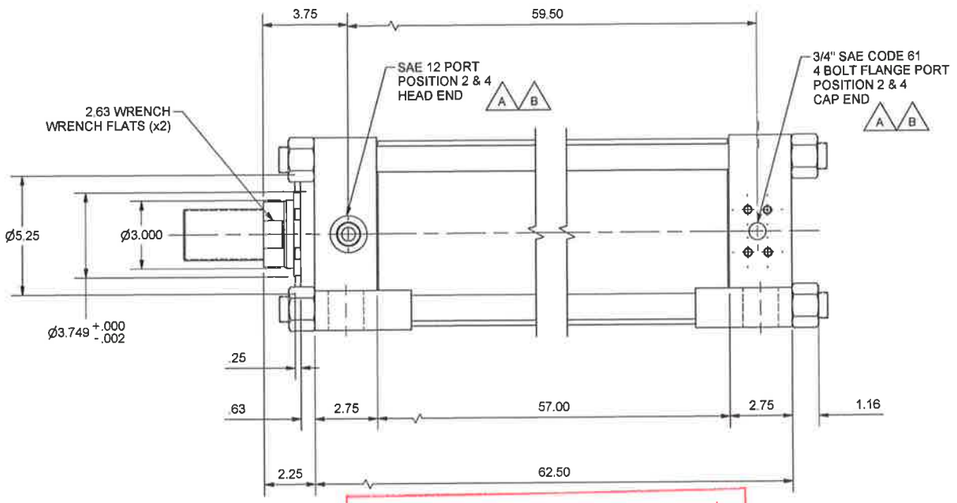

SERIES 3H HYDRAULIC CYLINDER			
STYLE C MOUNTING			
BORE SIZE: 7.00		HEAD	CAP
ROD DIA.: 3.00	PORTS AT POSITION:	2 & 4	2 & 4
THREAD STYLE: 4	NEEDLE VALVE AT POSITION:	-	-
CUSHION: NONE	CHECK VALVE AT POSITION:	-	-
STROKE: 54.00			

NOTES:

1. CLASS 1 SEALS
2. LIP SEAL PISTON
3. 17-4 STAINLESS STEEL, CHROME PLATE PISTON ROD
4. ONE PIECE (NON-WELDED) HEAD AND CAP
5. PAINT FOR SPLASH ZONE MARINE ENVIRONMENT

STANDARD ENVELOPE PRESSURE
3000 PSI

Record Drawings have been reviewed by the Project Engineer, and represent to the best of my knowledge, the project as constructed.
PE _____ Date 12/4/15

APPROVAL
Approved _____
Authorized By: _____
Company: _____
Date: __/__/__

THIS DOCUMENT CONTAINS INFORMATION THAT IS CONFIDENTIAL AND PROPRIETARY TO PARKER HANNIFIN CORPORATION. THIS DOCUMENT IS FURNISHED ON THE UNDERSTANDING THAT THE DOCUMENT AND THE INFORMATION IT CONTAINS WILL NOT BE COPIED OR DISCLOSED TO OTHERS EXCEPT WITH THE WRITTEN CONSENT OF PARKER HANNIFIN. WILL NOT BE USED FOR ANY PURPOSE OTHER THAN CONDUCTING BUSINESS WITH PARKER HANNIFIN, AND WILL BE RETURNED AND ALL FURTHER USE DISCONTINUED UPON REQUEST BY PARKER HANNIFIN

(UNLESS OTHERWISE SPECIFIED) TOLS. AND FINISHES PER ES-005 GEOMETRIC TOLS. PER CURRENT ASME Y14.5M ST.ANDARD

© COPYRIGHT PARKER. ALL RIGHTS RESERVED YEAR OF COPYRIGHT IS FIRST YEAR INDICATED ON THIS DOCUMENT

REV.	ECO-	DATE
B	0088457	12/11/14
A	0087481	12/3/14
-	0086912	11/26/14

MATERIAL
HEAT TREATMENT

SCALE	DATE	DRAWN BY	CHK BY	APPD. BY
1:4	11/26/14	PHJ	PHJ	

PARKER HANNIFIN CORP.
CYLINDER DIVISION
DES PLAINES, IL 60016
Parker Cylinder

HYDRAULIC CYLINDER MODEL
7.00 C-3HLTS14A X 54.00

PART NO. 1H000036394
DRAWING NO. 1H000036394-1
REV. B

Autodesk Inventor

C

8 of 10

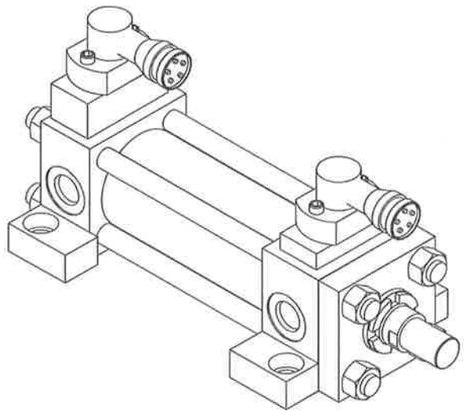

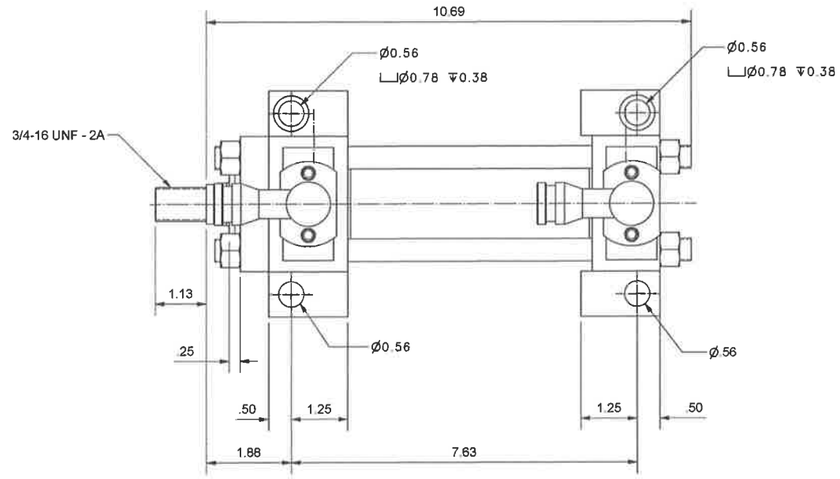

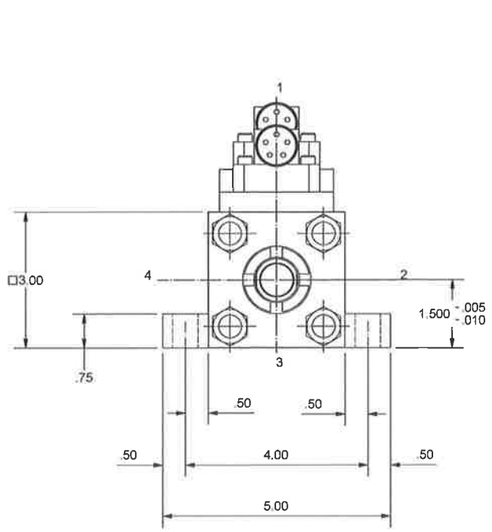

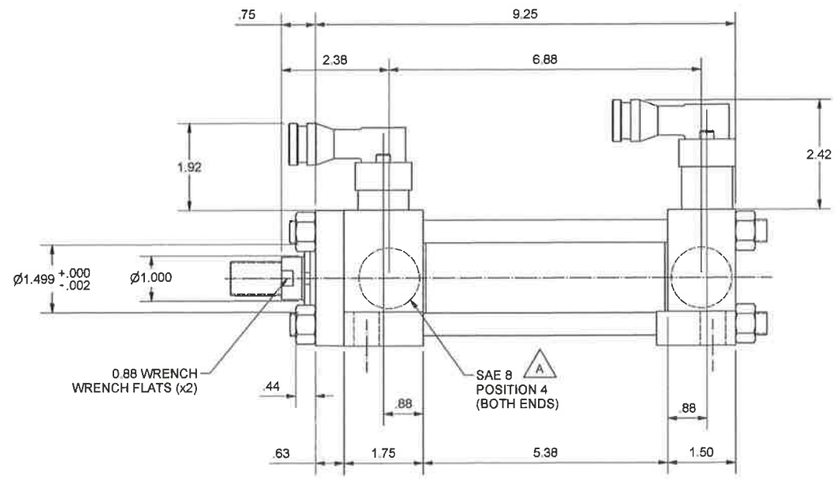

SERIES 2H HYDRAULIC CYLINDER			
STYLE C MOUNTING			
BORE SIZE: 2.00		HEAD	CAP
ROD DIA.: 1.00	PORTS AT POSITION:	4	4
THREAD STYLE: 4	NEEDLE VALVE AT POSITION:	-	-
CUSHION: NONE	CHECK VALVE AT POSITION:	-	-
STROKE: 4.00			

NOTES:

1. CLASS 1 SEALS
2. LIP SEAL PISTON
3. ONE PIECE (NON-WELDED) HEAD AND CAP
4. 17-4 STAINLESS STEEL, CHROME PLATED PISTON ROD
5. EPS7 SWITCHES @ POSITION #1 (BOTH ENDS) SWITCH CODE: H41AGG-41AGG
6. PAINT FOR SPLASH ZONE MARINE ENVIRONMENT
7. UNDER SIZE PORTS BOTH ENDS

STANDARD ENVELOPE PRESSURE
3000 PSI

Record Drawings have been reviewed by the Project Engineer, and represent to the best of my knowledge, the project as constructed.
PE KMM Date 12/10/15

APPROVAL
Approved
Authorized By:
Company:
Date: / /

THIS DOCUMENT CONTAINS INFORMATION THAT IS CONFIDENTIAL AND PROPRIETARY TO PARKER HANNIFIN CORPORATION. THIS DOCUMENT IS FURNISHED ON THE UNDERSTANDING THAT THE DOCUMENT AND THE INFORMATION IT CONTAINS WILL NOT BE COPIED OR DISCLOSED TO OTHERS EXCEPT WITH THE WRITTEN CONSENT OF PARKER HANNIFIN, WILL NOT BE USED FOR ANY PURPOSE OTHER THAN CONDUCTING BUSINESS WITH PARKER HANNIFIN, AND WILL BE RETURNED AND ALL FURTHER USE DISCONTINUED UPON REQUEST BY PARKER HANNIFIN

[UNLESS OTHERWISE SPECIFIED] TOLS. AND FINISHES PER ES-005 GEOMETRIC TOLS PER CURRENT ASME Y14.5M STANDARD

© COPYRIGHT PARKER. ALL RIGHTS RESERVED. YEAR OF COPYRIGHT IS FIRST YEAR INDICATED ON THIS DOCUMENT.

REV.	ECO-	DATE
A	0088460	12/10/14
-	0086883	11/26/14

MATERIAL
HEAT TREATMENT

SCALE	DATE	DRAWN BY	CHK. BY	APPD. BY
1:2	11/26/14	PHJ	PHJ	

PARKER HANNIFIN CORP.
CYLINDER DIVISION
DES PLAINES, IL 60016

Parker Cylinder

HYDRAULIC CYLINDER MODEL
2.00 C-2HLTS14A X 4.00 H41AGG-41AGG

PART NO.
1H000036421

DRAWING NO.
1H000036421-1

REV.
A

C

Autodesk Inventor

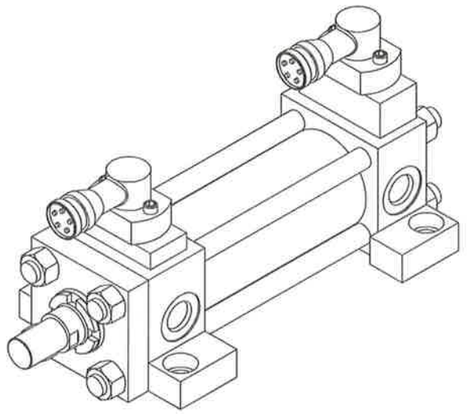

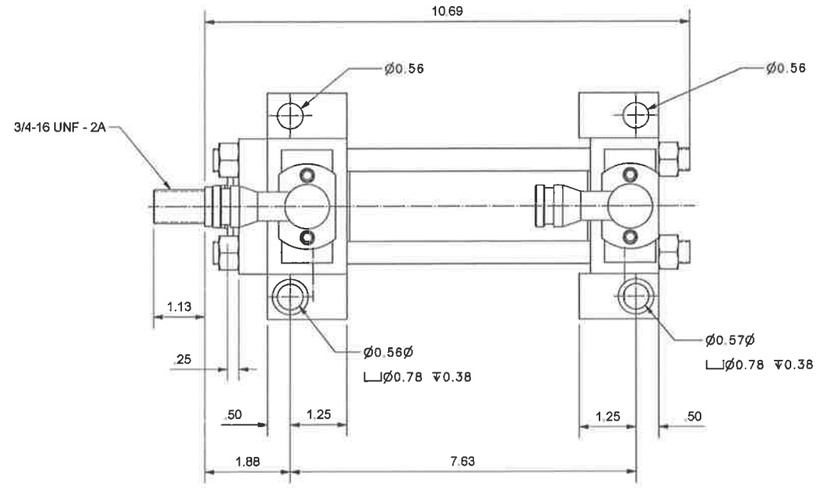

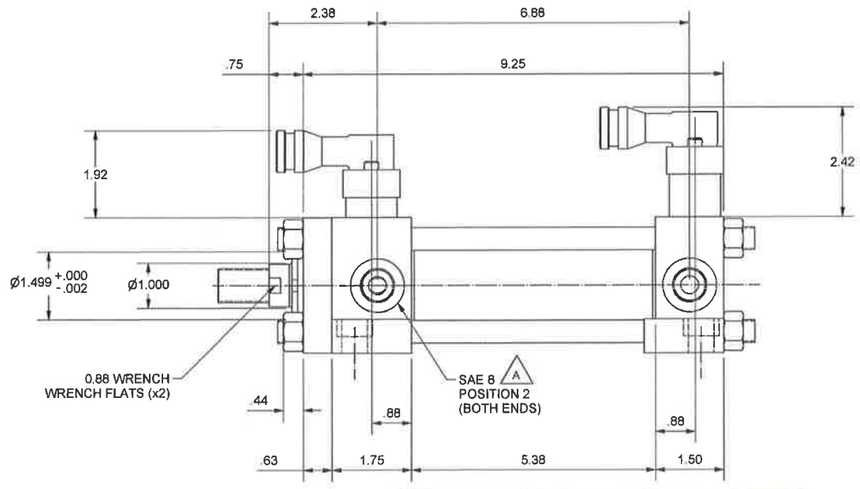

SERIES 2H HYDRAULIC CYLINDER			
STYLE C MOUNTING			
BORE SIZE: 2.00		HEAD	CAP
ROD DIA.: 1.00	PORTS AT POSITION:	2	2
THREAD STYLE: 4	NEEDLE VALVE AT POSITION:	-	-
CUSHION: NONE	CHECK VALVE AT POSITION:	-	-
STROKE: 4.00			

NOTES:

1. CLASS 1 SEALS
2. LIP SEAL PISTON
3. ONE PIECE (NON-WELDED) HEAD AND CAP
4. 17-4 STAINLESS STEEL, CHROME PLATED PISTON ROD
5. EPS7 SWITCHES @ POSITION #1 (BOTH ENDS) SWITCH CODE: H21AGG-21AGG
6. PAINT FOR SPLASH ZONE MARINE ENVIRONMENT
7. UNDERSIZE PORTS (BOTH ENDS)

Record Drawings have been reviewed by the Project Engineer, and represent to the best of my knowledge, the project as constructed.

PE _____ Date 12/10/15

STANDARD ENVELOPE PRESSURE
3000 PSI

APPROVAL

Approved _____

Authorized By: _____

Company: _____

Date: / /

THIS DOCUMENT CONTAINS INFORMATION THAT IS CONFIDENTIAL AND PROPRIETARY TO PARKER HANNIFIN CORPORATION. THIS DOCUMENT IS FURNISHED ON THE UNDERSTANDING THAT THE DOCUMENT AND THE INFORMATION IT CONTAINS WILL NOT BE COPIED OR DISCLOSED TO OTHERS EXCEPT WITH THE WRITTEN CONSENT OF PARKER HANNIFIN. WILL NOT BE USED FOR ANY PURPOSE OTHER THAN CONDUCTING BUSINESS WITH PARKER HANNIFIN. AND WILL BE RETURNED AND ALL FURTHER USE DISCONTINUED UPON REQUEST BY PARKER HANNIFIN.

UNLESS OTHERWISE SPECIFIED TOLS. AND FINISHES PER ES-005 DIGIMETRIC TOLS. PER CURRENT ASME Y14.5M STANDARD

© COPYRIGHT PARKER. ALL RIGHTS RESERVED. YEAR OF COPYRIGHT IS FIRST YEAR INDICATED ON THIS DOCUMENT.

REV.	ECO-	DATE	MATERIAL / HEAT TREATMENT
A	0088458	12/10/14	
-	0088883	11/26/14	

SCALE	DATE	DRAWN BY	CHK. BY	APPD. BY
1:2	11/26/14	PHJ	PHJ	

PARKER HANNIFIN CORP.
CYLINDER DIVISION
DES PLAINES, IL 60016

HYDRAULIC CYLINDER MODEL
2.00 C-2HLTS14A X 4.00 H21AGG-21AGG

PART NO. 1H000036413

DRAWING NO. 1H000036413-1 REV. A

C

Autodesk Inventor

67449 / 504(15) 130' Steel Pedestrian Bridge

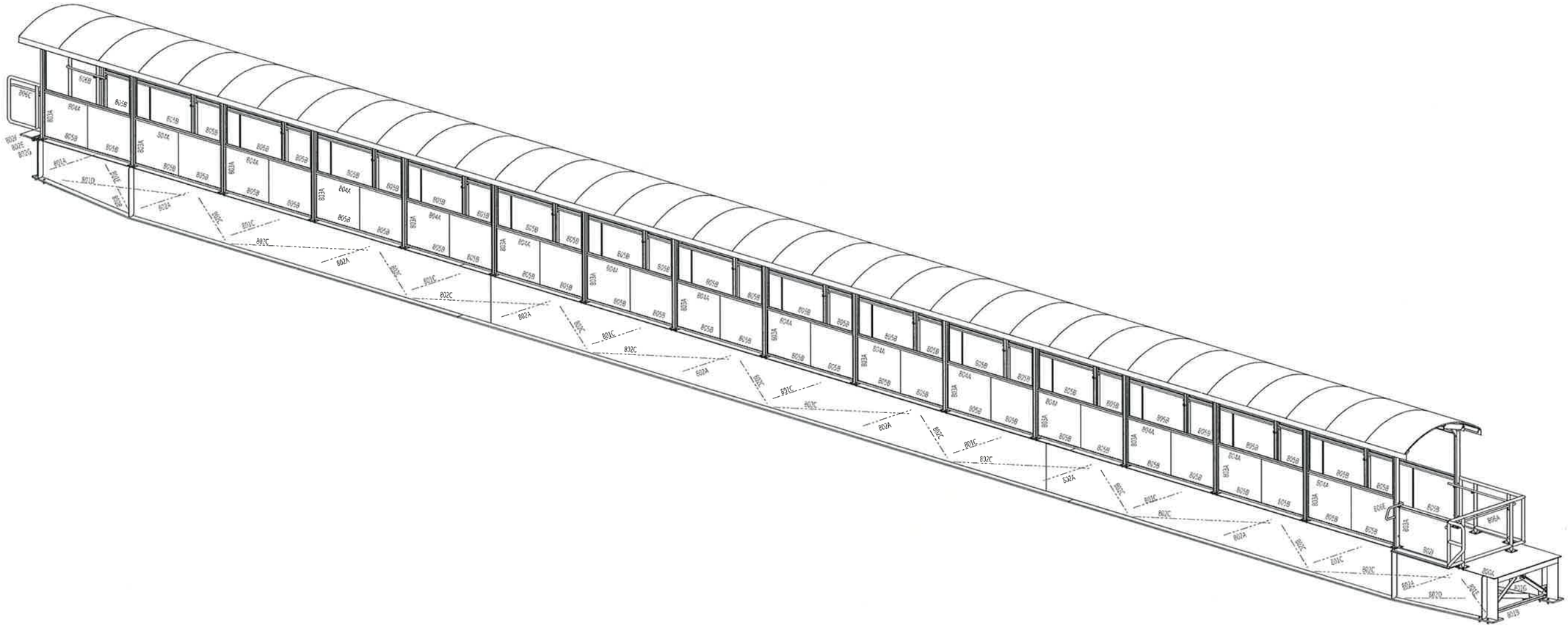

Record Drawings have been reviewed by the Project Engineer, and represent to the best of my knowledge, the project as constructed.

PE _____ Date 12/10/15

SOUTHCOAST REGION
CONSTRUCTION

FEB 03 2015

FOR FABRICATION

Dave Hawkins 1-28-15

State of Alaska
Dept. of Transportation and Public Facilities
Marine Facilities Engineering

CONTRACTOR SUBMITTAL REVIEW

Checking is only for conformance with the design concepts of the Project and compliance with the information given in the Contract Documents. The Contractor is responsible for dimensions to be confirmed and correlated at the job site for information that pertains solely to the fabrication process or to techniques of construction for coordination of the work of all trades

ACCEPTED ✓

ACCEPTED AS NOTED

RETURNED FOR CORRECTION

02/09/2015 Tim Doggett

Date Design Engineer

TOLERANCES:

(UNLESS OTHERWISE SPECIFIED)
3 PLACE DECIMALS +/- .01
2 PLACE DECIMALS +/- .03
FRACTIONS +/- 1/16
ANGLES +/- 2 DEGREES
MACHINE FINISHES 125 √ U.N.

REV	DESCRIPTION	BY	CHK	DATE
0	FOR FABRICATION	BRP	KB	Jan 28 2015
A	FOR APPROVAL	BRP	KB	Oct 20 2014

NOTES:
1. ERECT ALL MEMBER WITH THE MARKED END IN THE SAME RELATIVE POSITION AS SHOWN ON THE ERECTION DRAWING.
2. B.O.S.=BOTTOM OF STEEL. ELEVATIONS REFERENCED (xxx-x x/x) ARE TOP OF STEEL.
3. PLEASE PROVIDE INFORMATION AND VERIFICATIONS INDICATED IN CLOUDED AREAS. CLOUDED NOTES WITH NO REMARKS FROM THE APPROVAL AUTHORITY WILL BE CONSIDERED AS AN AFFIRMATION.

DETAILING: FABRICATION TECHNICAL SERVICES, INC.
www.FTSsteeldetailing.com
CONTACT: Kevin@FTSsteeldetailing.com
ph: (208) 457-8282

JESSE ENGINEERING CO.

1840 Marine View Drive, Tacoma, Washington 98422 Ph. 253-922-7433

REF: SHEETS 20, 21, 56 & 57 OF 57

PROJECT: IFA HOLLIS/CLARK BAY FERRY TERMINAL IMPROVEMENTS

CONTRACTOR: WESTERN MARINE CONSTRUCTION

DESCRIPTION: PEDESTRIAN BRIDGE ASSEMBLY

DATE: 10-17-14

FABRICATOR JOB NO: 203980

DWG NO: A800 ISO

JOB NO ####
SHEET SIZE 24X36
09:40:12 AM
Jan 28 2015

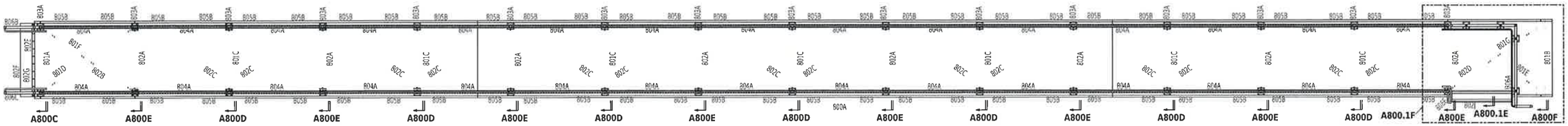

A800A PEDESTRIAN BRIDGE ASSEMBLY PLAN
REF: 52
ROOF NOT SHOWN FOR CLARITY

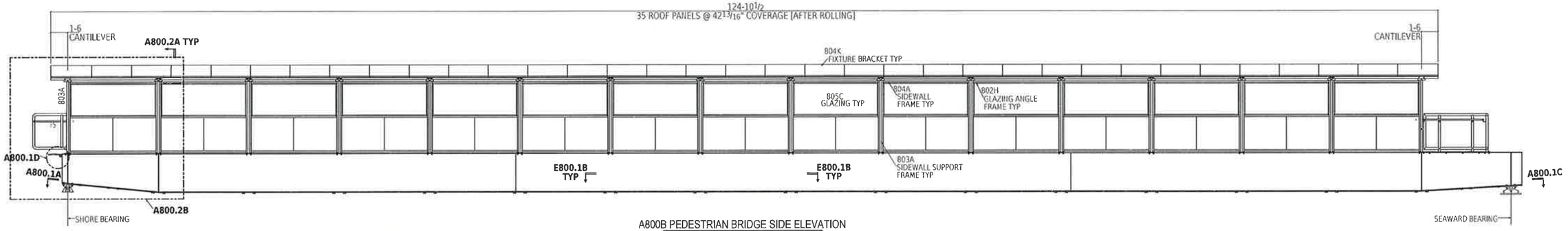

A800B PEDESTRIAN BRIDGE SIDE ELEVATION

Record Drawings have been reviewed by the Project Engineer, and represent to the best of my knowledge, the project as constructed.

PE _____ Date 12/10/15

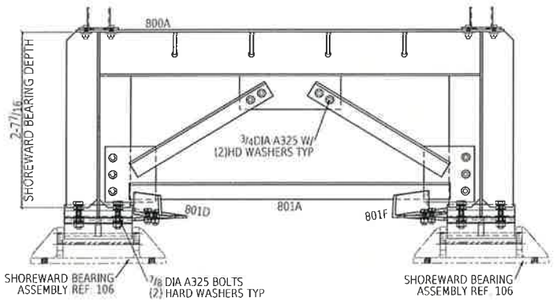

A800C SHORE BEARING BRACE SECTION
REF: A/53

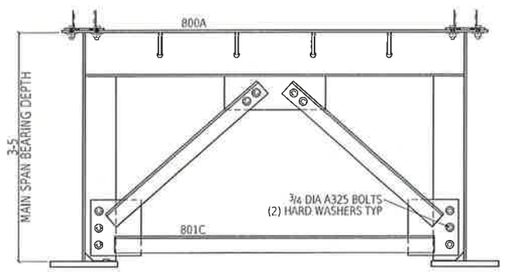

A800D K BRACE SECTION
REF: B/53

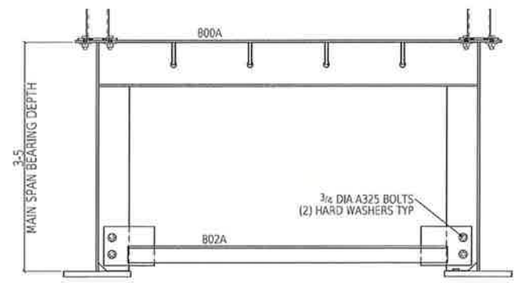

A800E LATERAL BRACE STRUT SECTION
REF: C/53

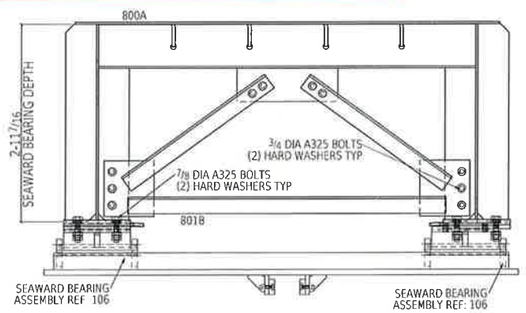

A800F SEAWARD BEARING BRACE SECTION
REF: D/53

FOR FABRICATION
Dave Hawkins 1-28-15

State of Alaska
Dept. of Transportation and Public Facilities
Marine Facilities Engineering

CONTRACTOR SUBMITTAL REVIEW

Checking is only for conformance with the design concepts of the Project and compliance with the information given in the Contract Documents. The Contractor is responsible for dimensions to be confirmed and correlated at the job site for information that pertains solely to the fabrication process or to techniques of construction for coordination of the work of all trades.

ACCEPTED ✓
ACCEPTED AS NOTED
RETURNED FOR CORRECTION
02/09/2015 Tim Doggett
Date Design Engineer

TOLERANCES:
(UNLESS OTHERWISE SPECIFIED)
3 PLACE DECIMALS +/- .01
2 PLACE DECIMALS +/- .03
FRACTIONS +/- 1/16
ANGLES +/- 2 DEGREES
MACHINE FINISHES 125 √ U.N.

REV	DESCRIPTION	BY	CHK	DATE
0	FOR FABRICATION	BRP	KB	Jan 28 2015
A	FOR APPROVAL	BRP	KB	Oct 20 2014

NOTES:
1. ERECT ALL MEMBER WITH THE MARKED END IN THE SAME RELATIVE POSITION AS SHOWN ON THE ERECTION DRAWING.
2. B.O.S.=BOTTOM OF STEEL. ELEVATIONS REFERENCED (xxx-x x/x) ARE TOP OF STEEL.
3. PLEASE PROVIDE INFORMATION AND VERIFICATIONS INDICATED IN CLOUDED AREAS. CLOUDED NOTES WITH NO REMARKS FROM THE APPROVAL AUTHORITY WILL BE CONSIDERED AS AN AFFIRMATION.

DETAILING: FABRICATION TECHNICAL SERVICES, INC.
www.FTSsteeldetailing.com
CONTACT Kevin@FTSsteeldetailing.com
ph: (208) 457-8282

JESSE ENGINEERING CO.
1840 Marine View Drive, Tacoma, Washington 98422 Ph. 253-922-7433

REF: SHEETS 52 THRU 55 OF 57

PROJECT: IFA HOLLIS/CLARK BAY FERRY TERMINAL IMPROVEMENTS
CONTRACTOR: WESTERN MARINE CONSTRUCTION
DESCRIPTION: PEDESTRIAN BRIDGE ASSEMBLY
DATE: 10-17-14
FABRICATION JOB NO: 203980
DWG NO: A800

JOB NO ###
SHEET SIZE 24X36
09:40:10 AM
Jan 28 2015

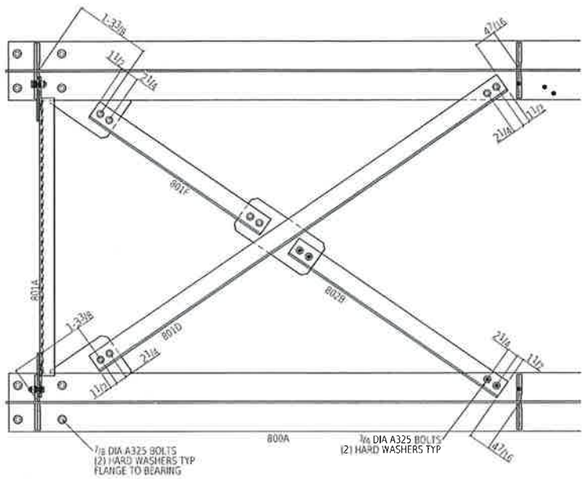

A800.1D SHORE TRANSITION PLATE

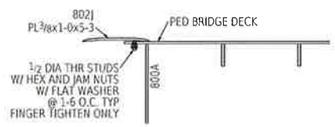

A800.1E SEAWARD TRANSITION PLATE

A800.1A SHOREWARD LATERAL BRACE

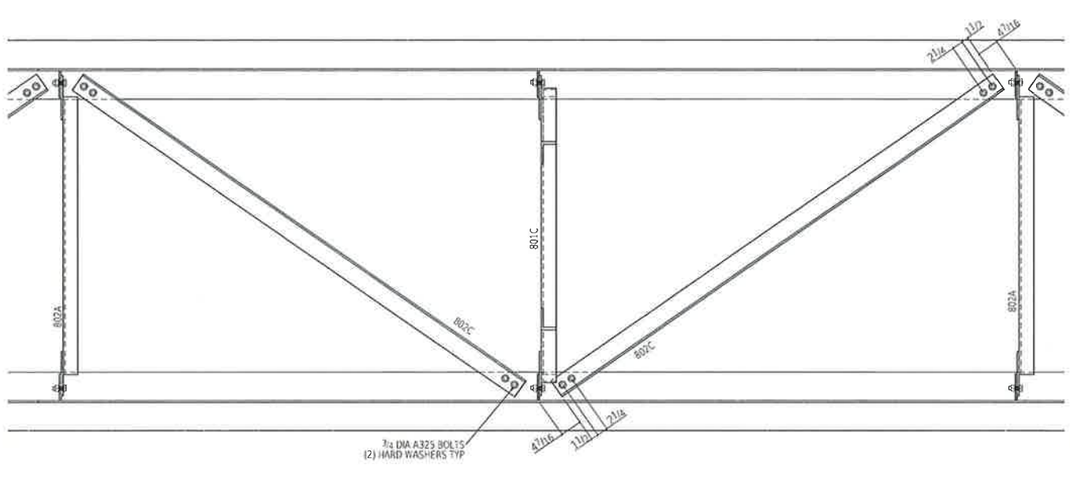

A800.1B TYPICAL LATERAL BRACE

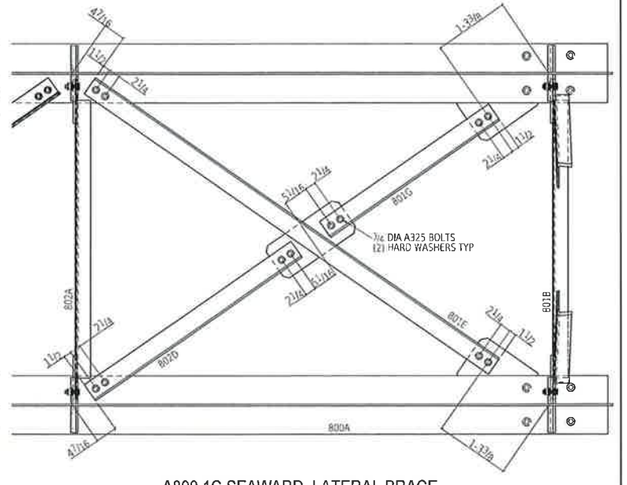

A800.1C SEAWARD LATERAL BRACE

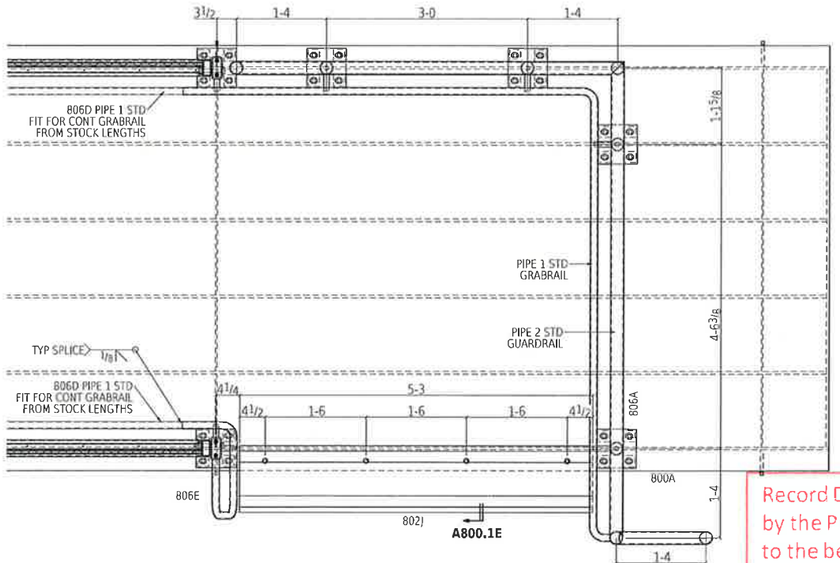

A800.1F SEAWARD DECK ENLARGED PLAN

Record Drawings have been reviewed by the Project Engineer, and represent to the best of my knowledge, the project as constructed.

PE _____ Date 12/10/15

FOR FABRICATION

Dave Hankins 1-28-15

State of Alaska
Dept. of Transportation and Public Facilities
Marine Facilities Engineering

CONTRACTOR SUBMITTAL REVIEW

Checking is only for conformance with the design concepts of the Project and compliance with the information given in the Contract Documents. The Contractor is responsible for dimensions to be confirmed and correlated at the job site for information that pertains solely to the fabrication process or to techniques of construction for coordination of the work of all trades.

ACCEPTED ✔
ACCEPTED AS NOTED
RETURNED FOR CORRECTION

02/09/2015 Tim Doggett
Date Design Engineer

TOLERANCES:

(UNLESS OTHERWISE SPECIFIED)
3 PLACE DECIMALS +/- .01
2 PLACE DECIMALS +/- .03
FRACTIONS +/- 1/16
ANGLES +/- 2 DEGREES
MACHINE FINISHES 125 √ U.N.

REV	DESCRIPTION	BY	CHK	DATE
0	FOR FABRICATION	BRP	KR	Jan 28 2015
A	FOR APPROVAL	BRP	KR	Oct 20 2014

NOTES:
1. ERECT ALL MEMBER WITH THE MARKED END IN THE SAME RELATIVE POSITION AS SHOWN ON THE ERECTION DRAWING.
2. B.O.S.=BOTTOM OF STEEL. ELEVATIONS REFERENCED (xxx-x x/x) ARE TOP OF STEEL.
3. PLEASE PROVIDE INFORMATION AND VERIFICATIONS INDICATED IN CLOUDED AREAS. CLOUDED NOTES WITH NO REMARKS FROM THE APPROVAL AUTHORITY WILL BE CONSIDERED AS AN AFFIRMATION.

DETAILING: FABRICATION TECHNICAL SERVICES, INC.
www.FTSsteeldetailing.com
CONTACT: Kevin@FTSsteeldetailing.com
ph: (208) 457-8282

JESSE ENGINEERING CO.
1840 Marine View Drive, Tacoma, Washington 98422 Ph. 253-922-7433

REF: SHEETS 52 THRU 55 OF 57

PROJECT: IFA HOLLIS/CLARK BAY FERRY TERMINAL IMPROVEMENTS
CONTRACTOR: WESTERN MARINE CONSTRUCTION
DESCRIPTION: PEDESTRIAN BRIDGE ASSEMBLY
DATE: 10-07-14
FABRICATOR NO: 203980
DWG NO: A800.1

JOB NO ### SHEET SIZE 24X36 09:40:14 AM Jan 28 2015

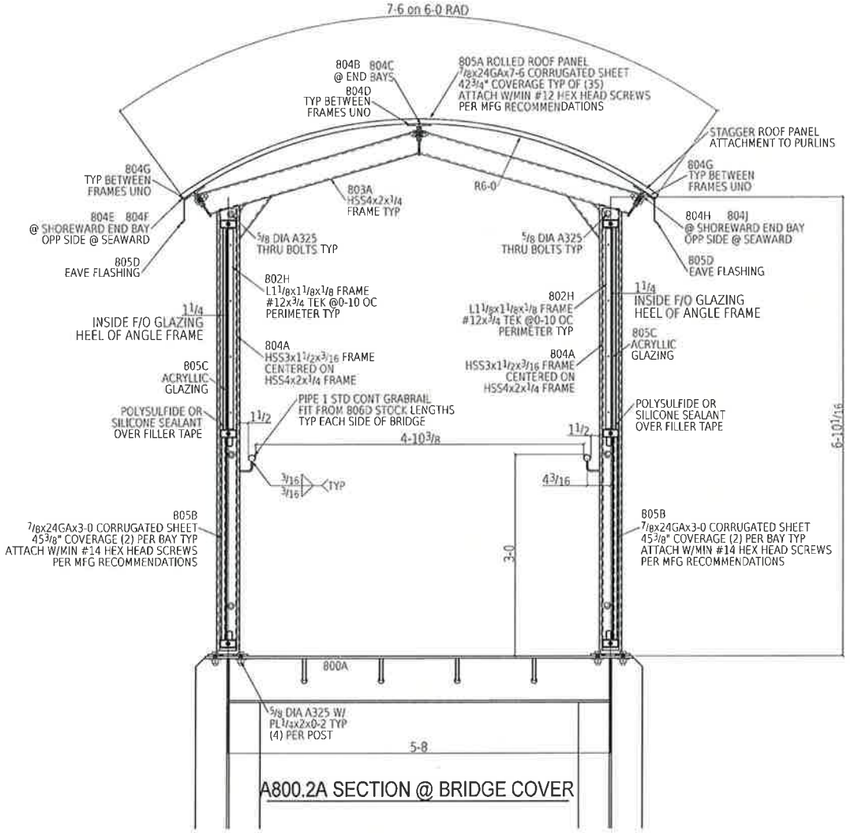

A800.2A SECTION @ BRIDGE COVER

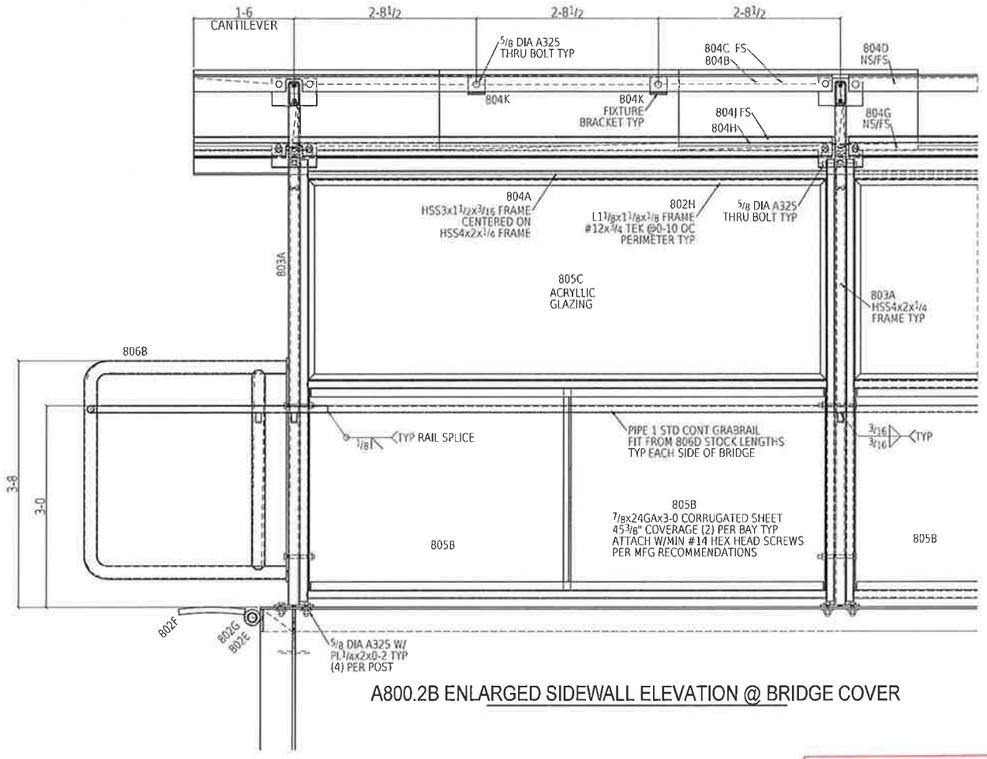

A800.2B ENLARGED SIDEWALL ELEVATION @ BRIDGE COVER

Record Drawings have been reviewed by the Project Engineer, and represent to the best of my knowledge, the project as constructed.

PE _____ Date 12/10/15

FOR FABRICATION

Dave Hankins 1-28-15

State of Alaska
Dept. of Transportation and Public Facilities
Marine Facilities Engineering

CONTRACTOR SUBMITTAL REVIEW

Checking is only for conformance with the design concepts of the Project and compliance with the information given in the Contract Documents. The Contractor is responsible for dimensions to be confirmed and correlated at the job site for information that pertains solely to the fabrication process or to techniques of construction for coordination of the work of all trades.

ACCEPTED ✓

ACCEPTED AS NOTED

RETURNED FOR CORRECTION

02/09/2015 Tim Doggett

Date Design Engineer

TOLERANCES:

(UNLESS OTHERWISE SPECIFIED)
3 PLACE DECIMALS +/- .01
2 PLACE DECIMALS +/- .03
FRACTIONS +/- 1/16
ANGLES +/- 2 DEGREES
MACHINE FINISHES 125 U.N.

REV	DESCRIPTION	BY	CHK	DATE
0	FOR FABRICATION	BRP	KB	Jan 28 2015
A	FOA APPROVAL	BRP	KB	Oct 20 2014

NOTES:
1. ERECT ALL MEMBER WITH THE MARKED END IN THE SAME RELATIVE POSITION AS SHOWN ON THE ERECTION DRAWING.
2. B.O.S.=BOTTOM OF STEEL. ELEVATIONS REFERENCED (xxx-x x/x) ARE TOP OF STEEL.
3. PLEASE PROVIDE INFORMATION AND VERIFICATIONS INDICATED IN CLOUDED AREAS. CLOUDED NOTES WITH NO REMARKS FROM THE APPROVAL AUTHORITY WILL BE CONSIDERED AS AN AFFIRMATION.

DETAILING: FABRICATION TECHNICAL SERVICES, INC.
www.FTSsteeldetailing.com
CONTACT: Kevin@FTSsteeldetailing.com
ph: (208) 457-8282

JESSE ENGINEERING CO.
1840 Marine View Drive, Tacoma, Washington 98422 Ph. 253-922-7433

REF: SHEETS 52 THRU 55 OF 57

PROJECT: IFA HOLLIS/CLARK BAY FERRY TERMINAL IMPROVEMENTS
CONTRACTOR: WESTERN MARINE CONSTRUCTION
DESCRIPTION: PEDESTRIAN BRIDGE ASSEMBLY
DATE: 10-17-14
INSPECTOR JOB NO: 203980
DWG NO: A800.2

JOB NO ### SHEET SIZE 24X36 09:40:15 AM Jan 28 2015

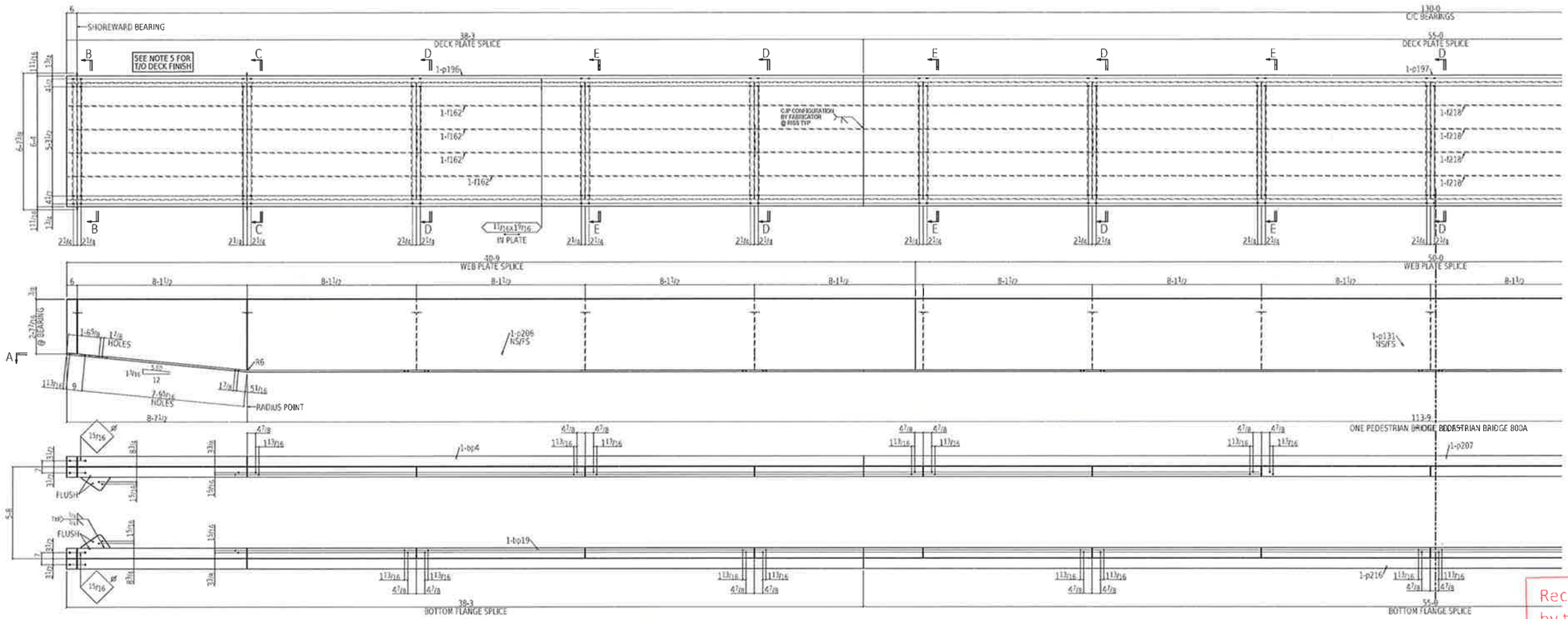

Section A-A
800A

ONE PEDESTRIAN BRIDGE 800A

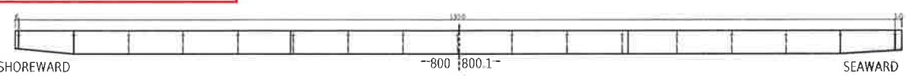

State of Alaska
Dept. of Transportation and Public Facilities
Marine Facilities Engineering

CONTRACTOR SUBMITTAL REVIEW

Checking is only for conformance with the design concepts of the Project and compliance with the information given in the Contract Documents. The Contractor is responsible for dimensions to be confirmed and correlated at the job site for information that pertains solely to the fabrication process or to techniques of construction for coordination of the work of all trades.

ACCEPTED ✔
ACCEPTED AS NOTED
RETURNED FOR CORRECTION

02/09/2015 Tim Doggett
Date Design Engineer

Record Drawings have been reviewed by the Project Engineer, and represent to the best of my knowledge, the project as constructed.

PE _____ Date 12/10/15

FOR FABRICATION
Dave Hankins 2-2-15

NOTES:
1. SEAL ALL WELDS.
2. SEE SHEET A800 FOR FULL ASSEMBLY.
3. SEE SHEET 800.1 FOR BALANCE OF SPAN.
4. SEE SHEET 800.2 FOR SECTIONS INDICATED.
5. TOP OF DECK PLATE SHALL BE COATED WITH WITH EPOXY NON-SKID PER SECTION 513- SYSTEM 7A.

REV	DESCRIPTION	BY	CHK	DATE
1	FRACTURE CRITICAL MARKS ADDED IN BOM	RRP	KB	Jan 30 2015
0	FOR FABRICATION	RRP	KB	Jan 28 2015
A	FOR APPROVAL	RRP	KB	Oct 20 2014

BILL OF MATERIAL

QTY total	Piece Mark	QTY unit	Description	Length		Remarks	Weight Unit
ONE	800A		PEDESTRIAN BRIDGE			SPRAY METALIZED	43154
17	wt3	17	WT8x13	5	7 5/8	A709-50	73
1	bp4	1	PL1x45 5/8	1	0	BENT A709-50-F2 F	1564
1	bp19	1	PL1x45 5/8	1	0	BENT A709-50-F2 F	1564
1	bp10	1	PL1x45 9/16	1	0	BENT A709-50-F2 F	1563
1	bp17	1	PL1x45 9/16	1	0	BENT A709-50-F2 F	1563
1	p207	1	PL1x12	55	0	A709-50-F2	2245
1	p216	1	PL1x12	55	0	A709-50-F2	2245
4	p154	4	PL1/2x7 11/16	1	4 9/16	A709-50	38
2	p181	2	PL1/2x5 1/2	2	11 3/8	A709-50	28
2	p170	2	PL1/2x5 1/2	2	7 7/16	A709-50	25
2	p157	2	PL1/2x5 1/2	2	3 1/2	A709-50	21
2	p174	2	PL1/2x5 1/2	1	11 9/16	A709-50	18
4	f218	4	FB1/2x4	55	0	A709-50	374
4	f162	4	FB1/2x4	38	2 1/2	A709-50	260
4	f37	4	FB1/2x4	38	2 1/2	A709-50	260
1	f42	1	FB1/2x4	5	7 5/8	A709-50	38

BILL OF MATERIAL

QTY total	Piece Mark	QTY unit	Description	Length		Remarks	Weight Unit
1	p197	1	PL3/8x76	55	0	4709-50	5334
1	p137	1	PL3/8x76	38	3	4709-50	3709
1	p196	1	PL3/8x76	38	3	4709-50	3709
2	p131	2	PL3/8x41	50	0	4709-50-F2 F	2616
2	p206	2	PL3/8x41	40	9	4709-50-F2 F	2132
2	p111	2	PL3/8x41	40	9	4709-50-F2 F	2132
1	f177	1	FB3/8x6	1	6	4709-50	11
1	f183	1	FB3/8x6	1	6	4709-50	11
7	f188	7	FB3/8x6	1	6	4709-50	11
4	p193	4	PL3/8x5 1/2	3	5	4709-50	24
14	p186	14	PL3/8x5 1/2	2	9 1/16	4709-50	19
16	p192	16	PL3/8x5 1/2	2	9 1/16	4709-50	19
			FIELD BOLTS				
16			7/8 Dia A325 DBLH	0	3 1/2	+2HD WASH	

Total weight 43154

DETAILING
JOB: 2265
REF: A800

FABRICATION TECHNICAL SERVICES, INC.
307 N. LINCOLN STE. B POST FALLS, ID 83854
(208) 457-8282 fax: (208) 457-8208
EMAIL: kevin@FTSsteeldetailing.com

HOLES DIA UNO: 13/16
SURF PREP SEE B.O.M.
FINISH: SEE B.O.M.

WELD 3/16 FILLET U.N.O. (E70XX)
W.P. (TAILS)
COL BASE PLATES ARE ALWAYS SECTION CUTS LOOKING DOWN

JESSE ENGINEERING CO.
1840 Marine View Drive, Tacoma, Washington 98422 Ph. 253-922-7433

PROJECT
IFA HOLLIS/CLARK BAY
FERRY TERMINAL IMPROVEMENTS

CONTRACTOR
WESTERN MARINE CONSTRUCTION

DESCRIPTION
130' PEDESTRIAN BRIDGE

DATE 10-10-14
JOB NO 203980
DWG NO 800

SHEET SIZE 24X36
Jan 31 2015 11:51:34 AM

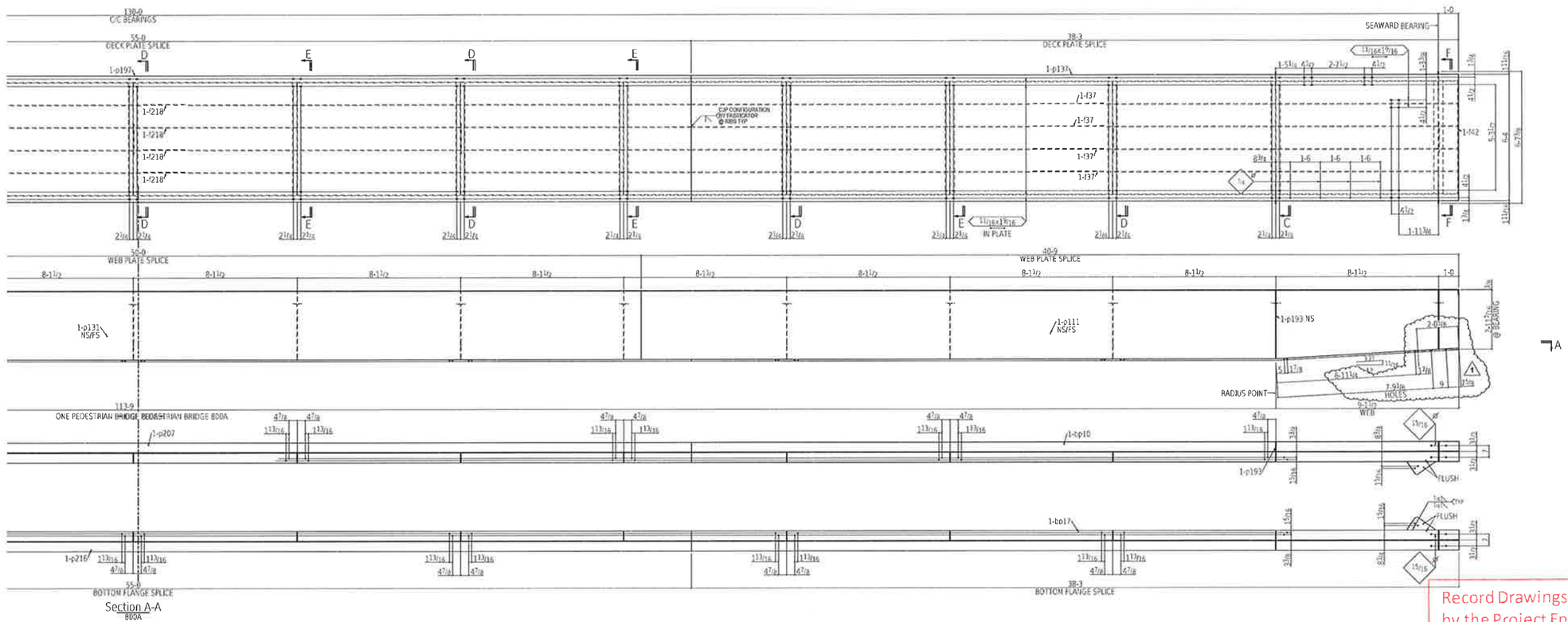

Section A-A
800A

ONE PEDESTRIAN BRIDGE 800A

State of Alaska
Dept. of Transportation and Public Facilities
Marine Facilities Engineering

CONTRACTOR SUBMITTAL REVIEW

Checking is only for conformance with the design concepts of the Project and compliance with the information given in the Contract Documents. The Contractor is responsible for dimensions to be confirmed and correlated at the job site for information that pertains solely to the fabrication process or to techniques of construction for coordination of the work of all trades

ACCEPTED ✔
ACCEPTED AS NOTED
RETURNED FOR CORRECTION

02/09/2015 Tim Doggett
Date Design Engineer

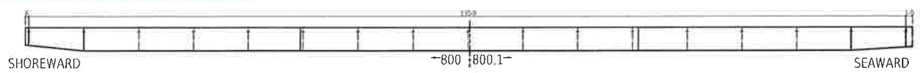

Record Drawings have been reviewed by the Project Engineer, and represent to the best of my knowledge, the project as constructed.

PE _____ Date 12/10/15

FOR FABRICATION
Dave Hankins 2-2-15

BILL OF MATERIAL

QTY total	Piece Mark	QTY unit	Description	Length	Remarks	Weight Unit

BILL OF MATERIAL

QTY total	Piece Mark	QTY unit	Description	Length	Remarks	Weight Unit

Total weight 0

REV	DESCRIPTION	BY	CHK	DATE
1	DIMENSION CLARIFIED	RRP	KB	Jan 29 2015
0	FOR FABRICATION	RRP	KB	Jan 28 2015
A	FOR APPROVAL	RRP	KB	Oct 20 2014

DETAILING:
JOB: 2265
REF: A800

FABRICATION TECHNICAL SERVICES, INC.
307 N. LINCOLN STE. B, POST FALLS, ID 83854
(208) 457-8282 fax: (208) 457-8208
EMAIL kevin@FTSsteeldetailing.com

HOLES DIA UNO 13/16
SURF PREP SEE B.O.M.
FINISH: SEE B.O.M.

WELD 3/16 FILLET U.N.O. (E70XX)
W.P. (TAILS)
COL BASE PLATES ARE ALWAYS SECTION CUTS LOOKING DOWN

JESSE ENGINEERING CO.
1840 Marine View Drive, Tacoma, Washington 98422 Ph. 253-922-7433

PROJECT
IFA HOLLIS/CLARK BAY
FERRY TERMINAL IMPROVEMENTS

CONTRACTOR
WESTERN MARINE CONSTRUCTION

DATE 10-10-14
JOB NO 203980
DWG NO 800.1

DESCRIPTION
130' PEDESTRIAN BRIDGE

SHEET SIZE: 24X36
Jan 31 2015 11:51:34 AM

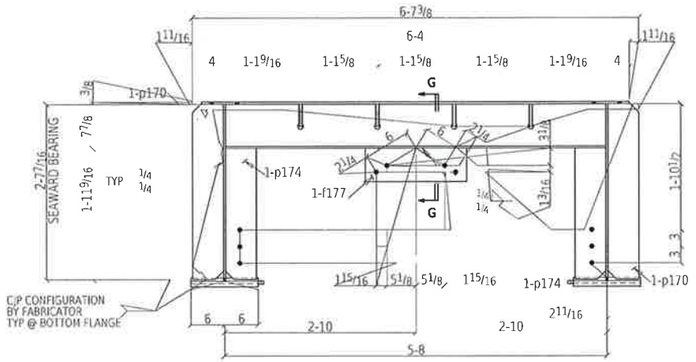

Section B-B
800A

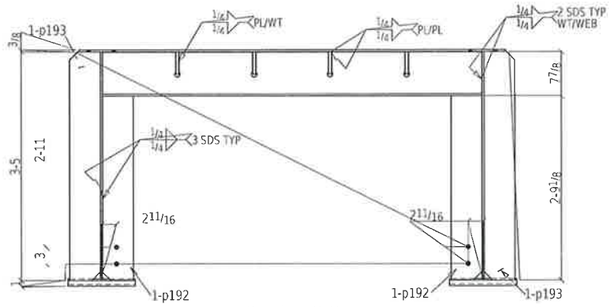

Section C-C
800A

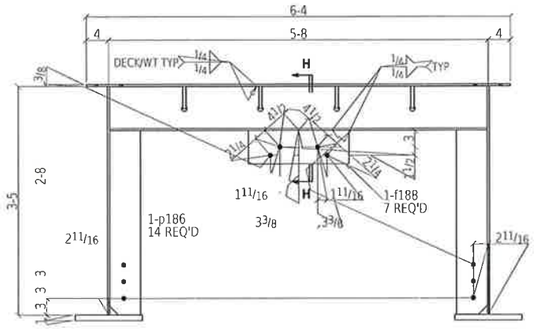

Section D-D
800A

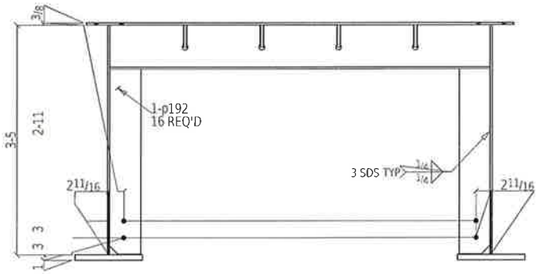

Section E-E
800A

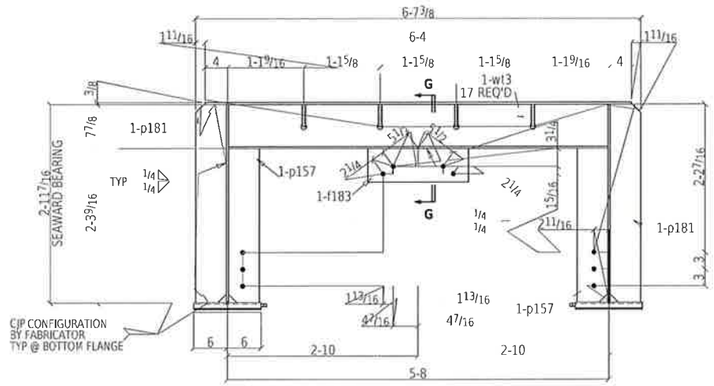

Section F-F
800A

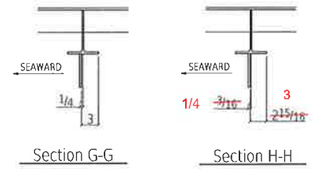

Section G-G

Section H-H

K BRACE PLATE LOCATIONS

Record Drawings have been reviewed by the Project Engineer, and represent to the best of my knowledge, the project as constructed.

PE _____ Date 12/10/15

FOR FABRICATION

Dave Hankins 1-28-15

SHEET SIZE: 24X36

09:40:23 AM

Jan 28 2015

State of Alaska
Dept. of Transportation and Public Facilities
Marine Facilities Engineering

CONTRACTOR SUBMITTAL REVIEW

Checking is only for conformance with the design concepts of the Project and compliance with the information given in the Contract Documents. The Contractor is responsible for dimensions to be confirmed and correlated at the job site for information that pertains solely to the fabrication process or to techniques of construction for coordination of the work of all trades.

ACCEPTED
ACCEPTED AS NOTED ✓
RETURNED FOR CORRECTION

02/09/2015 Tim Doggett
Date Design Engineer

BILL OF MATERIAL

QTY total	Piece Mark	QTY unit	Description	Length	Remarks	Weight Unit
ONE						

BILL OF MATERIAL

QTY total	Piece Mark	QTY unit	Description	Length	Remarks	Weight Unit
					Total weight 0	

REV	DESCRIPTION	BY	CHK	DATE
0	FOR FABRICATION	RRP	KB	Jan 28 2015
A	FOR APPROVAL	RRP	KB	Oct 20 2014

DETAILING:
JOB: 2265
REF A800

FABRICATION TECHNICAL SERVICES, INC.
307 N. LINCOLN STE. B, POST FALLS, ID 83854
(208) 457-8282 fax (208) 457-8208
EMAIL: kevin@FTSsteeldetailing.com

HOLES DIA UNO: 13/16
SURF PREP: SEE B.O.M.
FINISH: SEE B.O.M.

WELD 3/16 FILLET U.N.O. (E70XX)
W.P. (TAILS)
COL BASE PLATES ARE ALWAYS SECTION CUTS LOOKING DOWN

JESSE ENGINEERING CO.

1840 Marine View Drive, Tacoma, Washington 98422 Ph. 253-922-7433

PROJECT
IFA HOLLIS/CLARK BAY
FERRY TERMINAL IMPROVEMENTS

CONTRACTOR
WESTERN MARINE CONSTRUCTION

DESCRIPTION
130' PEDESTRIAN BRIDGE

DATE 10-10-14
JOB NO 203980
DAG NO 800.2

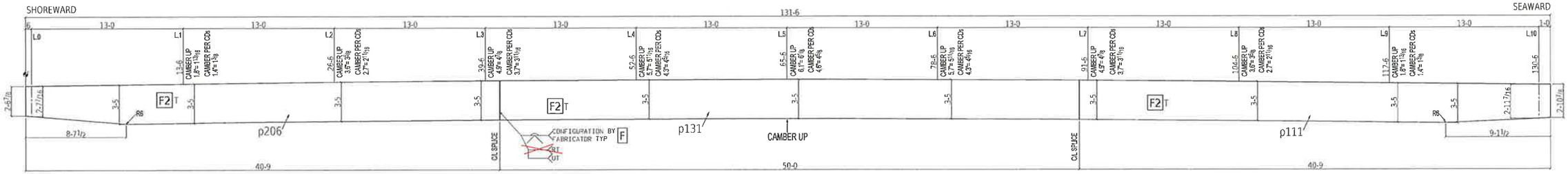

WEB DIAGRAM

REF: SHEET 52

CAMBER HAS BEEN INCREASED BY 1 1/2 INCHES AT L.5

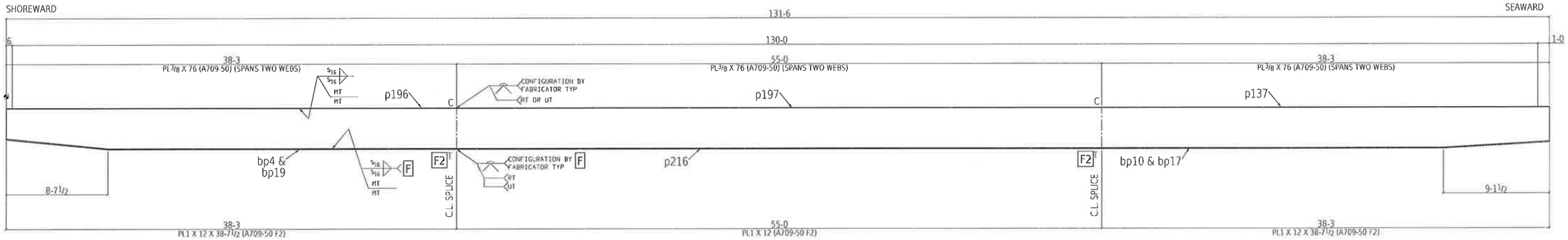

FLANGE DIAGRAM

State of Alaska
Dept. of Transportation and Public Facilities
Marine Facilities Engineering

CONTRACTOR SUBMITTAL REVIEW

Checking is only for conformance with the design concepts of the Project and compliance with the information given in the Contract Documents. The Contractor is responsible for dimensions to be confirmed and correlated at the job site for information that pertains solely to the fabrication process or to techniques of construction for coordination of the work of all trades.

ACCEPTED
ACCEPTED AS NOTED ✔
RETURNED FOR CORRECTION

02/09/2015 Tim Doggett
Date Design Engineer

Record Drawings have been reviewed by the Project Engineer, and represent to the best of my knowledge, the project as constructed.

PE [signature] Date 12/10/15

FOR FABRICATION
Dave Hankins 2-2-15

NOTES:
ALL MATERIAL = A709-50 UNO
T AND C INDICATE TENSION AND COMPRESSION RESPECTIVELY AND SHOULD BE TESED PER D1.5

F2 DESIGNATES FRACTURE CRITICAL TENSION COMPONENTS. MATERIAL SHALL BE A709-50 F2. SHALL BE TESTED IN ACCORDANCE WITH TABLE 9 OF ASTM-A-709. SPLICED BUT JOINTS TESTED PER D1.5.12.16.2.

F INDICATES FRACTURE CRITICAL WELDING REQUIRED.

SEE NOTES AND WELD CONFIGURATIONS ON SHEET 800.4

REV	DESCRIPTION	BY	CHK	DATE
1	FRACTURE SYMBOLS MODIFIED	RRP	KB	Jan 30 2015
0	FOR FABRICATION	RRP	KB	Jan 30 2015
A	FOR APPROVAL	RRP	KB	Oct 20 2014

BILL OF MATERIAL

QTY total	Piece Mark	QTY unit	Description	Length	Remarks	Weight Unit

BILL OF MATERIAL

QTY total	Piece Mark	QTY unit	Description	Length	Remarks	Weight Unit

Total weight 0

DETAILING:
JOB: 2265
REF: A800

FABRICATION TECHNICAL SERVICES, INC.
307 N. LINCOLN STE. B, POST FALLS, ID 83854
(208) 457-8282 fax (208) 457-8208
EMAIL kevin@FTSsteeldetailing.com

HOLES DIA UNO: 13/16
SURF PREP SEE B.O.M.
FINISH: SEE B.O.M.

WELD 3/16 FILLET U.N.O. (E70XX)
W.P. (TAILS)
COL BASE PLATES ARE ALWAYS SECTION CUTS LOOKING DOWN

JESSE ENGINEERING CO.
1840 Marine View Drive, Tacoma, Washington 98422 Ph. 253-922-7433

PROJECT
IFA HOLLIS/CLARK BAY FERRY TERMINAL IMPROVEMENTS

CONTRACTOR
WESTERN MARINE CONSTRUCTION

DATE 10-10-14
JOB NO 203980

DESCRIPTION
130' PEDESTRIAN BRIDGE

DWG NO 800.3

SHEET SIZE: 24X36
11:57:50 AM
Jan 31 2015

PEDESTRIAN BRIDGE SHOP NOTES

SPECIFICATIONS:

1. CONSTRUCTION OF THIS STRUCTURE SHALL CONFORM TO "AASHTO LRFD BRIDGE DESIGN SPECIFICATIONS", THE STATE DOT SPECIFICATIONS AND THE SPECIAL PROVISIONS.
2. AASHTO LRFD AND AWS D1.5, 2008, "BRIDGE WELDING CODE", AND A2.4, 2007 "STANDARD SYMBOLS FOR WELDING, BRAZING, AND NON-DESTRUCTIVE EXAMINATION". AISC LRFD 14TH ED.
3. MATERIAL, WORKMANSHIP, AND FABRICATION SHALL BE PERFORMED IN ACCORDANCE WITH THE STATE DOT SPECIFICATION, SUPPLEMENTAL AND SPECIAL PROVISIONS SEC 504.

MATERIAL:

1. ALL FLANGES, WEBS AND SPLICE PLATES SHALL BE ASTM A709 GRADE 50 TYPICAL.
2. ALL MATERIAL NOTED ON THE DETAILS AS "CVN" OR [F2] SHALL REQUIRE CHARPY V-NOTCH IMPACT TESTED AS CATEGORY F2 AND ASTM-A709 TABLE 9.
3. ALL H.S. BOLTS SHALL MEET THE REQUIREMENTS OF ASTM A325 TYPE 1.
   ALL NUTS SHALL MEET THE REQUIREMENTS OF ASTM A 563.
   ALL WASHERS SHALL MEET THE REQUIREMENTS OF ASTM F436.
   DIRECT TENSION INDICATING WASHERS MEET ASTM F959.
   DO NOT MIX NUTS AND BOLTS FROM DIFFERENT LOTS.
   RC TESTING IS REQUIRED FOR ALL BOLTS BEFORE INSTALLATION.
5. ALL MATERIAL NOTED AS "F2" OR [F2] SHALL MEET THE FOLLOWING REQUIREMENTS:
   A. MILL ORDERS SHALL SPECIFY KILLED FINE-GRAIN PRACTICE FOR STEEL USED IN FCMs (D1.5 12.4.2).
   B. MILL ORDER SHALL STIPULATE THAT NO WELDED REPAIRS SHALL BE PERFORMED BY THE PRODUCING MILL (D1.5 12.4.3).
   C. THE TOUGHNESS OF BASE-METAL SHAPES, PLATES, AND BARS SHALL BE AS SPECIFIED IN AASHTO M270M (ASTMA 709M) FOR FRACTURE CRITICAL IMPACT TEST REQUIREMENTS. THE GRADE OF STEEL METHOD OF JOINING AND AASHTO TEMPERATURE ZONE IN WHICH THE STRUCTURE WILL BE CONSTRUCTED SHALL BE NOTED IN THE MILL ORDER (D1.5 12.4.5).
   D. MILL ORDERS SHALL SPECIFY SUPPLEMENTARY REQUIREMENTS FOR CVN TEST VALUES MEETING THE REQUIREMENTS OF D1.5 12.

FABRICATION AND WORKMANSHIP:

1. CLIP CORNERS OF ALL BEARING STIFFENERS, CROSSFRAME CONNECTION PLATES AND INTERMEDIATE STIFFENERS AS NOTED ON DETAIL SHEETS AND TERMINATE WELDS AS SHOWN IN THE WELD TERMINATION DETAIL ON THIS SHEET.
2. ALL RE-ENTRANT CUTS SHALL HAVE A MINIMUM RADIUS OF ONE INCH UNLESS NOTED.
3. HOLES NOTED "DA" ON THE DETAIL SHEETS SHALL BE EITHER SUB-PUNCHED OR SUB-DRILLED 3/16 UNDERSIZED AND REAMED FULL SIZE. HOLES NOTED "MC" ON DETAIL SHEETS SHALL BE DRILLED FULL SIZE.
4. THE HEIGHTS SHOWN ON DETAIL SHEETS ARE GROSS HEIGHTS. DO NOT USE THESE HEIGHTS FOR LIFTING OF SHIPPING PURPOSES.
5. ALL FIELD SPLICE MATERIAL SHALL BE MATCH MARKED AND BOLTED BEFORE SHIPMENT. SEE MATCH MARKING SCHEME ON SHOP ASSEMBLY DRAWINGS.
6. WHEN "F2" MATERIAL MUST BE MARKED WITH HEAT NUMBERS OR OTHER IDENTIFYING MARKS BY DIE STAMPING, LOW-STRESS DIES SHALL BE USED (D1.5 12.4.6).
7. WHEN "F2" MATERIAL IS DESIGNATED, REFER TO THE FOLLOWING D1.5 PROVISIONS:
   12.10 THERMAL CUTTING
   12.11 REPAIR OF BASE METAL
   12.12 STRAIGHTENING, CURVING, AND CAMBERING
   12.13 TACK WELDS AND TEMPORARY WELDS
8. DIMENSIONAL TOLERANCES PER AASHTO AND AWS D1.5 SECTION 3.5.

SHOP CLEANING AND PAINTING NOTES:

UNDERSIDE OF DECK AND BELOW SHALL BE SPRAY METALIZED AND COATED IN CONFORMANCE WITH SECTION 513 - SYSTEM 10, SSPC-CS 23.00 & AMS C2.18.

TOP OF DECK SHALL BE COATED WITH EPOXY NON-SKID IN CONFORMANCE WITH SECTION 513 - SYSTEM 7A.

TOP COATED WITH POLYURETHANE ENAMEL.

SHOP WELDING AND TESTING NOTES:

WELDING:
1. WELDING SHALL BE IN ACCORDANCE WITH ANSI/AASHTO/AWS BRIDGE WELDING CODE, D1.5, EXCEPT AS MODIFIED BY THE CONTRACT DOCUMENTS AND APPLIED SHOP WELDING PROCEDURES (SEE DOCUMENTATION SEC 4.1, NOTE "N").
2. WHERE MATERIAL IS DESIGNATED "F2":
   A. SMAW, SAW, FCAW, AND GMAW WITH METAL CORED ELECTRODES MAY BE USED TO CONSTRUCT OR REPAIR (D1.5 12.5.1).
   B. ESW AND EGW SHALL BE PROHIBITED FOR WELDING FCM'S. GMAW (EXCEPT AS ALLOWED IN 12.5.1) MAY ONLY BE USED WITH THE APPROVAL OF THE ENGINEER. WHEN GMAW (EXCEPT AS ALLOWED IN 12.5.1) IS ALLOWED, QUALIFICATION TESTS, PROCEDURE CONTROL AND HDT SHALL BE AS SPECIFIED BY THE ENGINEER (D1.5 12.5.2).
   C. ALL WELDING CONSUMABLES SHALL BE HEAT OR LOT TESTED PER D1.5 12.6.1. HANDLING AND MANAGEMENT OF ELECTRODES AND FILLER METALS PER D1.5 12.6.2 THROUGH 12.6.7.6.
   D. GROOVE WELD STRENGTH:
      (1) GROOVE WELDS REQUIRED TO HAVE A YIELD STRENGTH EQUAL TO THE MINIMUM SPECIFIED YIELD STRENGTH OF THE BASE METAL SHALL HAVE A CVN TEST VALUE EQUAL TO, OR EXCEEDING THAT, SPECIFIED IN D1.5 TABLE 12.1 (D1.5 12.6.4.1).
      (2) ALL WELDS ALLOWED TO HAVE UNDERMATCHING YIELD STRENGTH SHALL HAVE A MINIMUM CVN TEST VALUE OF 25 FOOT POUNDS AT -20 DEGREES F (D1.5 12.6.4.2).
   E. SEE D1.5 12.14 FOR PREHEAT AND INTERPASS TEMPERATURE CONTROL.
   F. SEE D1.5 12.15 FOR POSTWELD THERMAL TREATMENTS.

TESTING:
1. NONDESTRUCTIVE TESTING SHALL BE IN ACCORDANCE WITH ANSI/AASHTO/AWS BRIDGE WELDING CODE D1.5, AND AISC CERTIFIED STEEL FABRICATOR PROGRAM, MAJOR BRIDGE CATEGORY AS SHOWN ON THE DETAIL DWGS.
2. ALL WELDS SHALL BE TESTED AND INSPECTED AS INDICATED ON DRAWINGS PER D1.5 CLAUSE 6.
3. ADDITIONAL TEST AND INSPECTION REQUIRED FOR "F2" ALSO NOTED ON THE DRAWINGS INCLUDES:
   A. BUTT JOINTS IN TENSION AND REPAIRED GROOVE WELDS IN BUTT JOINTS SHALL BE QC INSPECTED BY BOTH RT AND UT (D1.5 12.16.2.1).
   B. FILLET WELD REPAIRS SHALL BE INSPECTED BY MT. THE TEST LENGTH SHALL INCLUDE 100% OF THE LENGTH OF THE REPAIR, AND, WHEN APPROPRIATE, AT LEAST 12 INCHES BEYOND THE ENDS OF EACH EACH REPAIR (D1.5 12.16.2.3).
   C. RT SHALL BE DONE USING HOLE-TYPE IQIs AS DESCRIBED IN D1.5 TABLE 6.1 AND FIGURE 6.1E (D1.5 12.16.3).
   D. RT AND PRELIMINARY VISUAL INSPECTIONS MAY BE PERFORMED AS SOON AS WELDS HAVE COOLED. UT, MT, AND FINAL VISUAL INSPECTION SHALL BE DONE AFTER THE WELDS HAVE COOLED TO AMBIENT TEMPERATURE FOR AS LEAST:
      (1) FILLET WELDS ON STEEL WITH A MINIMUM SPECIFIED YIELD STRENGTH OF 50 KSI OR LESS, 24 HOURS.
      (2) FILLET WELDS IN STEEL WITH A MINIMUM SPECIFIED YIELD STRENGTH OVER 50 KSI, 48 HOURS.
      (3) GROOVE WELDS IN STEEL WITH A MINIMUM SPECIFIED YIELD STRENGTH OF 50 KSI OR LESS, 24 HOURS WHEN THE WELD DEPTH IS 2 INCHES OR LESS, AND 48 HOURS WHEN THE WELD DEPTH IS GREATER THAN 2 INCHES.
      (4) GROOVE WELDS IN STEEL WITH A MINIMUM SPECIFIED YIELD STRENGTH OVER 50 KSI, 48 HOURS WHEN THE WELD DEPTH IS 2 INCHES OR LESS, AND 72 HOURS WHEN THE WELD DEPTH IS GREATER THAN 2 INCHES. (D1.5 12.16.4)
4. FOR "FCM" MATERIAL AN:

REPAIRS OF "FCM" MATERIAL OR WELDS:
1. REPAIR WELDING SHALL BE DEFINED AS ANY WELDING, INCLUDING REMOVAL OF WELD OR BASE METAL IN PREPARATION FOR WELDING, NECESSARY TO CORRECT UNACCEPTABLE DISCONTINUITIES IN MATERIALS OR WORKMANSHIP. WELDED REPAIRS SHALL BE CATEGORIZED AS NONCRITICAL (D1.5 12.17.2) OR CRITICAL (12.17.3) WITH SEPARATE REQUIREMENTS FOR EACH (D1.5 12.17).
2. ALL REPAIR WELDING SHALL BE DONE IN CONFORMANCE WITH AN APPROVED WPS. THE WPS MAY BE PREAPPROVED AS DESCRIBED IN D1.5 12.17.2 OR INDIVIDUALLY APPROVED AS DESCRIBED IN D1.5 12.17.3 (D1.5 12.17.1).

STANDARD ABBREVIATIONS:

MT	MAGNETIC PARTICLE NDT
NC	NUMERICAL CONTROL
NDT	NONDESTRUCTIVE TESTING
NS	NEAR SIDE
N.T.S.	NOT TO SCALE
OBG	ORTHOTROPIC BOX GIRDER
OPP.	OPPOSITE
PC	POINT OF CURVATURE
PCC	POINT OF COMPOUND CURVE
PT	POINT OF TANGENCY
R	RADIUS
RA	REAM ASSEMBLED
RT	RADIOGRAPHIC NDT
SECT.	SECTION
STIFF.	STIFFENER
U.N.	UNLESS NOTED
UT	ULTRASONIC NDT
WP	WORK POINT
WS	WELD SHRINKAGE
HT	WRENCH TIGHT BOLTS (SNUG TIGHT)

MATCH MARKING PROCEDURE FOR FIELD ASSEMBLY

1. ALL HORIZONTAL BRACES TO BE MATCH MARKED AFTER ASSEMBLY.
2. THE MATCH MARKS CONSIST OF THE MARK WITH A SUFFIX. THE MARKINGS ARE STENCILED PERMANENTLY ONTO THE STEEL AT THE END OF THE BRACE. THE CORRESPONDING SUFFIX (A,B,C, ETC.,) IS STENCILED NEAR THE BRACE ONTO THE GIRDER.

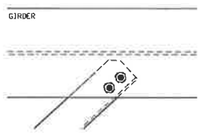

MATCH MARKING PROCEDURE

Record Drawings have been reviewed by the Project Engineer, and represent to the best of my knowledge, the project as constructed.

PE _____ Date 12/10/15

FOR FABRICATION
Dave Hankins 1-28-15

State of Alaska
Dept. of Transportation and Public Facilities
Marine Facilities Engineering

CONTRACTOR SUBMITTAL REVIEW

Checking is only for conformance with the design concepts of the Project and compliance with the information given in the Contract Documents. The Contractor is responsible for dimensions to be confirmed and correlated at the job site for information that pertains solely to the fabrication process or to techniques of construction for coordination of the work of all trades.

ACCEPTED ✔
ACCEPTED AS NOTED
RETURNED FOR CORRECTION

02/09/2015 Tim Doggett
Date Design Engineer

SHEET SIZE: 24X36
09:40:23 AM
Jan 28 2015

BILL OF MATERIAL

QTY total	Piece Mark	QTY unit	Description	Length	Remarks	Weight Unit

BILL OF MATERIAL

QTY total	Piece Mark	QTY unit	Description	Length	Remarks	Weight Unit

Total weight 0

REV	DESCRIPTION	BY	CHK	DATE
0	FOR FABRICATION	RRP	KB	Jan 28 2015
A	FOR APPROVAL	RRP	KB	Oct 20 2014

DETAILING:
JOB: 2265
REF A800

HOLES DIA UNO: 13/16
SURF PREP SEE B.O.M.
FINISH: SEE B.O.M.

FABRICATION TECHNICAL SERVICES, INC.
307 N. LINCOLN STE. B, POST FALLS, ID 83854
(208) 457-8282 fax: (208) 457-8208
EMAIL: kevin@FTSsteeldetailing.com

WELD 3/16 FILLET U.N.O. (E70XX)
W.P. (TAILS)
COL BASE PLATES ARE ALWAYS SECTION CUTS LOOKING DOWN

JESSE ENGINEERING CO.
1840 Marine View Drive, Tacoma, Washington 98422 Ph. 253-922-7433

PROJECT
IFA HOLLIS/CLARK BAY
FERRY TERMINAL IMPROVEMENTS
CONTRACTOR
WESTERN MARINE CONSTRUCTION
DATE 10-10-14
JOB NO 203980
DESCRIPTION
130' PEDESTRIAN BRIDGE
DWG NO 800.4

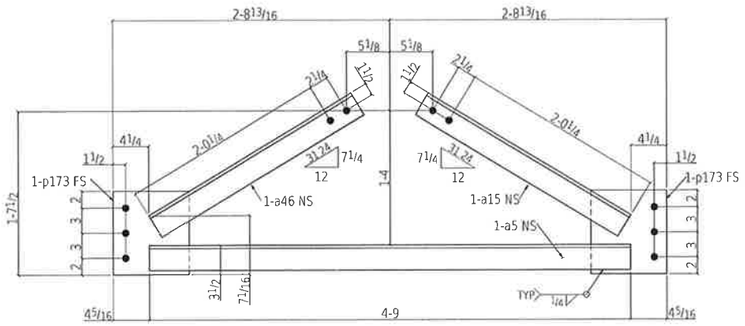

ONE BRACE FRAME 801A

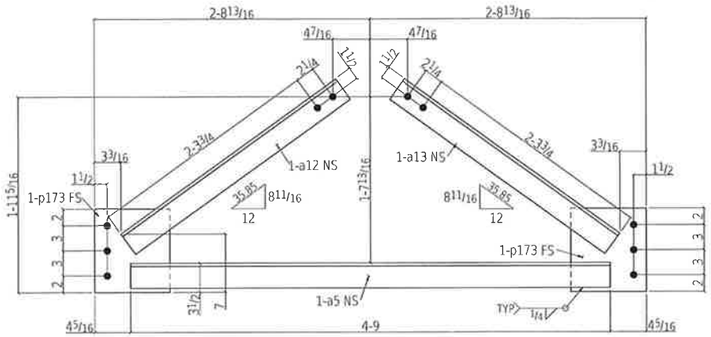

ONE BRACE FRAME 801B

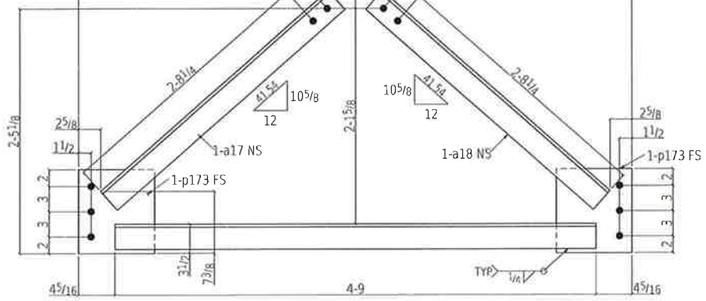

7 BRACE FRAMES 801C

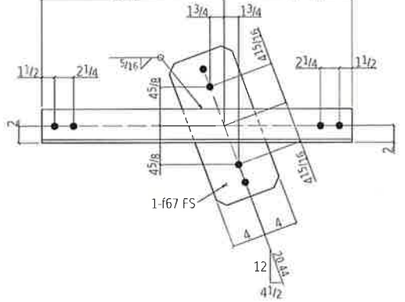

ONE LATERAL BRACE 801D

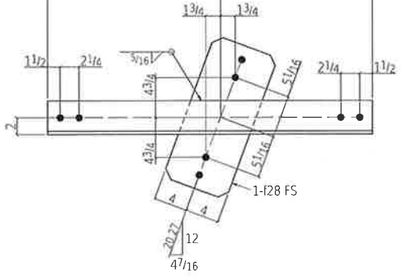

ONE LATERAL BRACE 801E

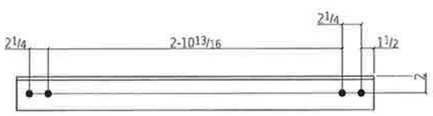

ONE LATERAL BRACE 801F

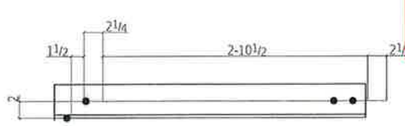

ONE LATERAL BRACE 801G

BILL OF MATERIAL

QTY total	Piece Mark	QTY unit	Description		Length		Remarks	Weight Unit
ONE	801A		BRACE FRAME				HOT DIP GALVANIZE	87
1	a5	1	L3x3x3/8	4	9		A709-50	34
1	a15	1	L3x3x3/8	2	4		A709-50	17
1	a46	1	L3x3x3/8	2	4		A709-50	17
2	p173	2	PL3/8x9	0	10		A709-50	10
			FIELD BOLTS					
10			3/4 Dia A325 DBLH	0	2 1/2		+2HD WASH	
ONE	801B		BRACE FRAME				HOT DIP GALVANIZE	91
1	a5	1	L3x3x3/8	4	9		A709-50	34
1	a25	1	L3x3x3/8	2	7 1/2		A709-50	19
1	a28	1	L3x3x3/8	2	7 1/2		A709-50	19
2	p173	2	PL3/8x9	0	10		A709-50	10
			FIELD BOLTS					
10			3/4 Dia A325 DBLH	0	2 1/2		+2HD WASH	
7	801C		BRACE FRAME				HOT DIP GALVANIZE	97
7	801C	1	L3x3x3/8	4	9		A709-50	34
7	a8	1	L3x3x3/8	3	0		A709-50	22
7	a9	1	L3x3x3/8	3	0		A709-50	22
14	p173	2	PL3/8x9	0	10		A709-50	10
			FIELD BOLTS					
70			3/4 Dia A325 DBLH	0	2 1/2		+2HD WASH	
ONE	801D		LATERAL BRACE				HOT DIP GALVANIZE	103
1	801D	1	L4x4x3/8	8	4 15/16		A709-50	82
1	f67	1	FBL2x8	1	6		A709-50	20
			FIELD BOLTS					
2			3/4 Dia A325 DBLH	0	2 3/4		+2HD WASH	
2			3/4 Dia A325 DBLH	0	2 1/4		+2HD WASH	
ONE	801E		LATERAL BRACE				HOT DIP GALVANIZE	103
1	801E	1	L4x4x3/8	8	4 11/16		A709-50	82
1	f28	1	FBL2x8	1	6		A709-50	20
			FIELD BOLTS					
2			3/4 Dia A325 DBLH	0	2 3/4		+2HD WASH	
2			3/4 Dia A325 DBLH	0	2 1/4		+2HD WASH	
ONE	801F		LATERAL BRACE				HOT DIP GALVANIZE	35
1	801F	1	L4x4x3/8	3	6 5/16		A709-50	35
			FIELD BOLTS					
4			3/4 Dia A325 DBLH	0	2 1/4		+2HD WASH	
ONE	801G		LATERAL BRACE				HOT DIP GALVANIZE	34
1	801G	1	L4x4x3/8	3	6 1/16		A709-50	34
			FIELD BOLTS					
4			3/4 Dia A325 DBLH	0	2 1/4		+2HD WASH	

Total weight: 1128

Record Drawings have been reviewed by the Project Engineer, and represent to the best of my knowledge, the project as constructed.

PE _____ Date 12/10/15

State of Alaska
Dept. of Transportation and Public Facilities
Marine Facilities Engineering

CONTRACTOR SUBMITTAL REVIEW

Checking is only for conformance with the design concepts of the Project and compliance with the information given in the Contract Documents. The Contractor is responsible for dimensions to be confirmed and correlated at the job site for information that pertains solely to the fabrication process or to techniques of construction for coordination of the work of all trades.

ACCEPTED ✔
ACCEPTED AS NOTED
RETURNED FOR CORRECTION

02/09/2015 Tim Doggett
Date Design Engineer

FOR FABRICATION
Dave Haukins 1-28-15

REV	DESCRIPTION	BY	CHK	DATE
0	FOR FABRICATION	RRP	KB	Jan 28 2015
A	FOR APPROVAL	RRP	KB	Oct 20 2014

DETAILING:
JOB: 2265
REF 38 OF 57

FABRICATION TECHNICAL SERVICES, INC.
307 N. LINCOLN STE. B POST FALLS, ID 83854
(208) 457-8282 fax (208) 457-8208
EMAIL: kevin@FTSsteeldetailing.com

HOLES DIA UNO 13/16
SURF PREP SEE B.O.M.
FINISH: SEE B.O.M.

WELD 3/16 FILLET U.N.O. (E70XX)
W.P. (TAILS)
COL BASE PLATES ARE ALWAYS SECTION CUTS LOOKING DOWN

TOLERANCES:
(UNLESS OTHERWISE SPECIFIED)
3 PLACE DECIMALS +/- .01
2 PLACE DECIMALS +/- .03
FRACTIONS +/- 1/16
ANGLES +/- 2 DEGREES
MACHINE FINISHES 125 U.N.

JESSE ENGINEERING CO.
1840 Marine View Drive, Tacoma, Washington 98422 Ph. 253-922-7433

PROJECT: IFA HOLLIS/CLARK BAY FERRY TERMINAL IMPROVEMENTS
CONTRACTOR: WESTERN MARINE CONSTRUCTION
DESCRIPTION: PEDESTRIAN BRIDGE
DATE: 10-10-14
JOB NO: 203990
DWG NO: 801

SHEET SIZE 24X36
09:40:24 AM
Jan 28 2015

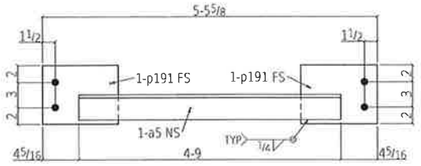

8 STRUTS 802A

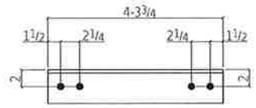

ONE LATERAL BRACE 802B

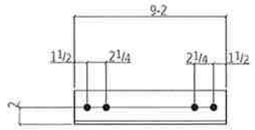

14 LATERAL BRACES 802C

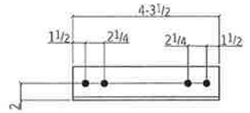

ONE LATERAL BRACE 802D

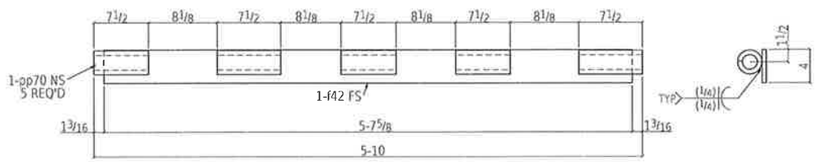

ONE HINGE 802E

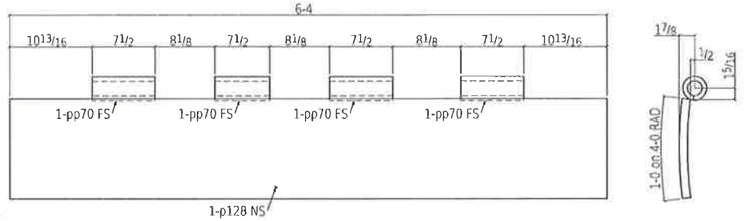

SEE NOTE 2

ONE TRANSITION PLATE 802F

30 WINDOW FRAMES 802H

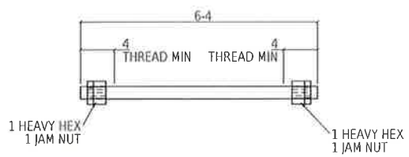

ONE HINGE PIN 802G

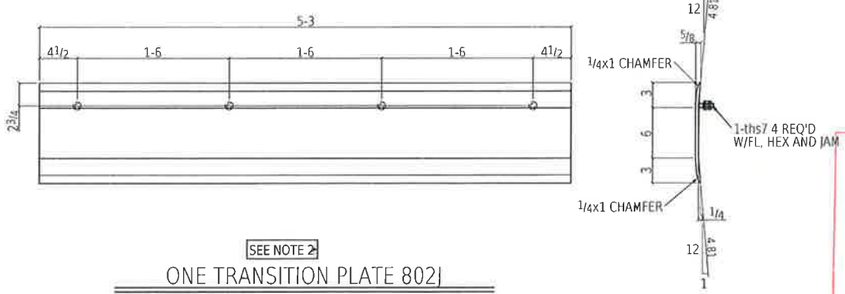

SEE NOTE 2

ONE TRANSITION PLATE 802I

BILL OF MATERIAL

QTY total	Piece Mark	QTY unit	Description	Length		Remarks	Weight Unit
8	802A		STRUT			HOT DIP GALVANIZE	48
8	a5	1	L3x3x3/8	4	9	A709-50	34
16	p191	2	PL3/8x7	0	9	A709-50	7
			FIELD BOLTS				
32			3/4 Dia A325 DBLH	0	2 1/4	+2HD WASH	
ONE	802B		LATERAL BRACE			HOT DIP GALVANIZE	42
1	802B	1	L4x4x3/8	4	3 3/8	A709-50	42
			FIELD BOLTS				
2			3/4 Dia A325 DBLH	0	2 3/8	+2HD WASH	
2			3/4 Dia A325 DBLH	0	2 1/4	+2HD WASH	
14	802C		LATERAL BRACE			HOT DIP GALVANIZE	90
14	802C	1	L4x4x3/8	9	2	A709-50	90
			FIELD BOLTS				
56			3/4 Dia A325 DBLH	0	2 3/8	+2HD WASH	
ONE	802D		LATERAL BRACE			HOT DIP GALVANIZE	42
1	802D	1	L4x4x3/8	4	3 1/2	A709-50	42
			FIELD BOLTS				
2			3/4 Dia A325 DBLH	0	2 3/8	+2HD WASH	
2			3/4 Dia A325 DBLH	0	2 1/4	+2HD WASH	
ONE	802E		HINGE			HOT DIP GALVANIZE	81
5	pp70	5	PIPE 2 1/2 XXSTG	0	7 1/2	A538	9
1	f42	1	FPL1/2x4	5	7 5/8	A709-50	38
ONE	802F		TRANSITION PLATE SEE NOTE 2			HOT DIP GALVANIZE	293
4	pp70	4	PIPE 2 1/2 XXSTG	0	7 1/2	A538	9
1	p128	1	PL1x12	6	4	ROLLED A36	259
ONE	802G		HINGE PIN			HOT DIP GALVANIZE	38
1	802G	1	RB1 1/2	6	4	A36	38
1		2	1 1/2 NUT			HMUT A108	
1		2	1 1/2 NUT			HHNT A563	
30	802H		WINDOW FRAME			HOT DIP GALVANIZE	19
60	a11	2	L1 1/2x1 1/2x1/8	7	8 1/2	A36	7
60	a14	2	L1 1/2x1 1/2x1/8	3	0	A36	3
			FIELD BOLTS				
848		28	#12 HEX HEAD TEK	0	0 3/4	GALV	
ONE	802I		TRANSITION PLATE SEE NOTE 2			HOT DIP GALVANIZE	134
1	802I	1	PLS-3x3x3/8	0	11 13/16	A36	134
4	ths7	4	TBD1/2	0	1 3/4	4108	0
1		4	1/2 NUT			HMUT A563	
1		4	1/2 NUT			HHNT A563	
1		4	1/2 WASHER			FL F436	

Total weight 2847

REV	DESCRIPTION	BY	CHK	DATE
0	FOR FABRICATION	RRP	KB	Jan 28 2015
A	FOR APPROVAL	RRP	KB	Oct 20 2014

FOR FABRICATION
Dave Hankins 1-28-15

DETAILING:
JOB: 2265
REF: 38 OF 57

FABRICATION TECHNICAL SERVICES, INC.
307 N. LINCOLN STE. B POST FALLS, ID 83854
(208) 457-8282 fax. (208) 457-8208
EMAIL: kevin@FTSsteeldetailing.com

HOLES DIA UNO: 13/16
SURF PREP: SEE B.O.M.
FINISH: SEE B.O.M.

WELD 3/16 FILLET U.N.O. (E70XX)
W.P. (TAILS)
COL BASE PLATES ARE ALWAYS SECTION CUTS LOOKING DOWN

NOTES:
1. SEAL ALL WELDS.
2. TOP SURFACE OF TRANSITION PLATES SHALL BE COATED WITH EPOXY NON-SKID PER SECTION 513, SYSTEM 7A

TOLERANCES:
(UNLESS OTHERWISE SPECIFIED)
3 PLACE DECIMALS +/- .01
2 PLACE DECIMALS +/- .03
FRACTIONS +/- 1/16
ANGLES +/- 2 DEGREES
MACHINE FINISHES 125 √ U.N.

JESSE ENGINEERING CO.
1840 Marine View Drive, Tacoma, Washington 98422 Ph. 253-922-7433

PROJECT: IFA HOLLIS/CLARK BAY FERRY TERMINAL IMPROVEMENTS
CONTRACTOR: WESTERN MARINE CONSTRUCTION
DESCRIPTION: PEDESTRIAN BRIDGE
DATE: 10-10-14
JOB NO: 203980
DWG NO: 802

State of Alaska
Dept. of Transportation and Public Facilities
Marine Facilities Engineering

CONTRACTOR SUBMITTAL REVIEW

Checking is only for conformance with the design concepts of the Project and compliance with the information given in the Contract Documents. The Contractor is responsible for dimensions to be confirmed and correlated at the job site for information that pertains solely to the fabricators process or to techniques of construction for coordination of the work of all trades.

ACCEPTED ✓
ACCEPTED AS NOTED
RETURNED FOR CORRECTION
02/09/2015 Tim Doggett
Date Design Engineer

Record Drawings have been reviewed by the Project Engineer, and represent to the best of my knowledge, the project as constructed.
PE _____ Date 12/10/15

SHEET SIZE 24X36
09.40.25 AM
Jan 28 2015

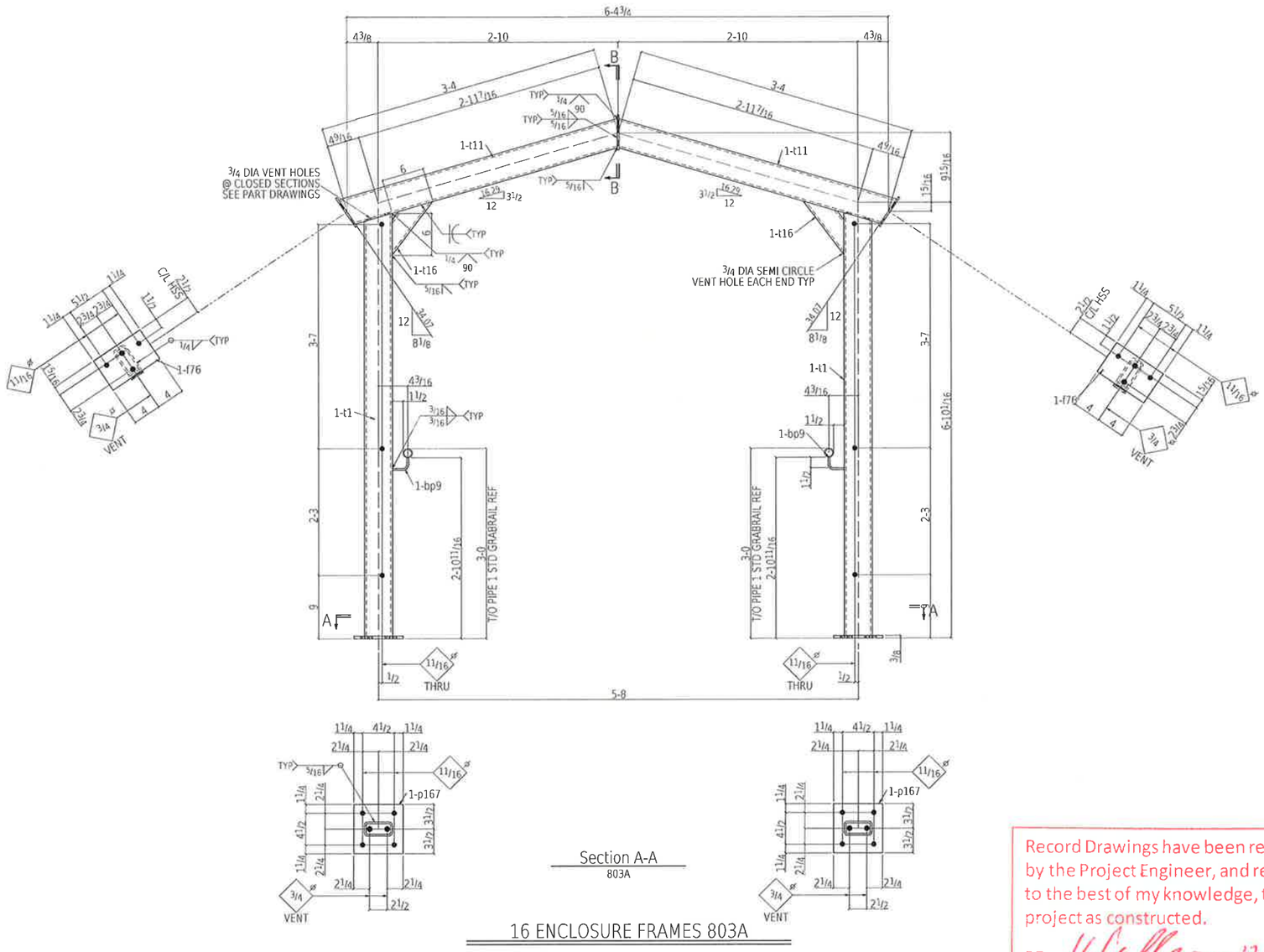

Section A-A
803A

Section B-B
803A

16 ENCLOSURE FRAMES 803A

BILL OF MATERIAL

QTY total	Piece Mark	QTY unit	Description	Length		Remarks	Weight Unit
16	803A		ENCLOSURE FRAME			HOT DIP GALVANIZE	209
32	t1	2	HSS4x2x1/4	6	8 3/16	S1E A500B	59
32	t11	2	HSS4x2x1/4	3	5 1/2	S2E A500B	30
32	t16	2	HSS3x2x1/4	0	6 9/16	A500B	6
32	p167	2	PL 3/8x7	0	7	A36	5
16	f45	1	FB1/4x5	0	8	A36	3
32	f76	2	FB1/4x5	0	8	A36	3
32	bp9	2	PL 1/4x3 9/16	0	1	RENT A36	0
			FIELD BOLTS				
128			3/4 Dia A325N	0	2	4 TPL WASH	

Total weight 3343

REV	DESCRIPTION	BY	CHK	DATE
0	FOR FABRICATION	GRP	KB	Jan 28 2015
A	FOR APPROVAL	GRP	KB	Oct 20 2014

FOR FABRICATION
Dave Hankins 1-28-15

Record Drawings have been reviewed by the Project Engineer, and represent to the best of my knowledge, the project as constructed.
PE [signature] Date 12/10/15

State of Alaska
Dept. of Transportation and Public Facilities
Marine Facilities Engineering

CONTRACTOR SUBMITTAL REVIEW

Checking is only for conformance with the design concepts of the Project and compliance with the information given in the Contract Documents. The Contractor is responsible for dimensions to be confirmed and correlated at the job site for information that pertains solely to the fabrication process or to techniques of construction for coordination of the work of all trades.

ACCEPTED ✔
ACCEPTED AS NOTED
RETURNED FOR CORRECTION
02/09/2015 Tim Doggett
Date Design Engineer

DETAILING: FABRICATION TECHNICAL SERVICES, INC.
JOB: 2265 307 N. LINCOLN STE. B, POST FALLS, ID 83854
REF 54 OF 57 (208) 457-8282 fax: (208) 457-8208
EMAIL: kevin@FTSsteeldetailing.com

HOLES DIA UNO: 13/16
SURF PREP SEE B.O.M.
FINISH: SEE B.O.M.

WELD 3/16 FILLET U.N.O. (E70XX)
W.P. (TAILS)
COL BASE PLATES ARE ALWAYS SECTION CUTS LOOKING DOWN

JESSE ENGINEERING CO.
1840 Marine View Drive, Tacoma, Washington 98422 Ph. 253-922-7433

TOLERANCES:
(UNLESS OTHERWISE SPECIFIED)
3 PLACE DECIMALS +/- .01
2 PLACE DECIMALS +/- .03
FRACTIONS +/- 1/16
ANGLES +/- 2 DEGREES
MACHINE FINISHES 125 √U.N.

PROJECT: IFA HOLLIS/CLARK BAY FERRY TERMINAL IMPROVEMENTS
CONTRACTOR: WESTERN MARINE CONSTRUCTION
DESCRIPTION: PEDESTRIAN BRIDGE ENCLOSURE FRAME
DATE: 10-15-14
JOB NO: 203980
DWG NO: 803

Jan 28 2015 09:40:26 AM SHEET SIZE: 24X36

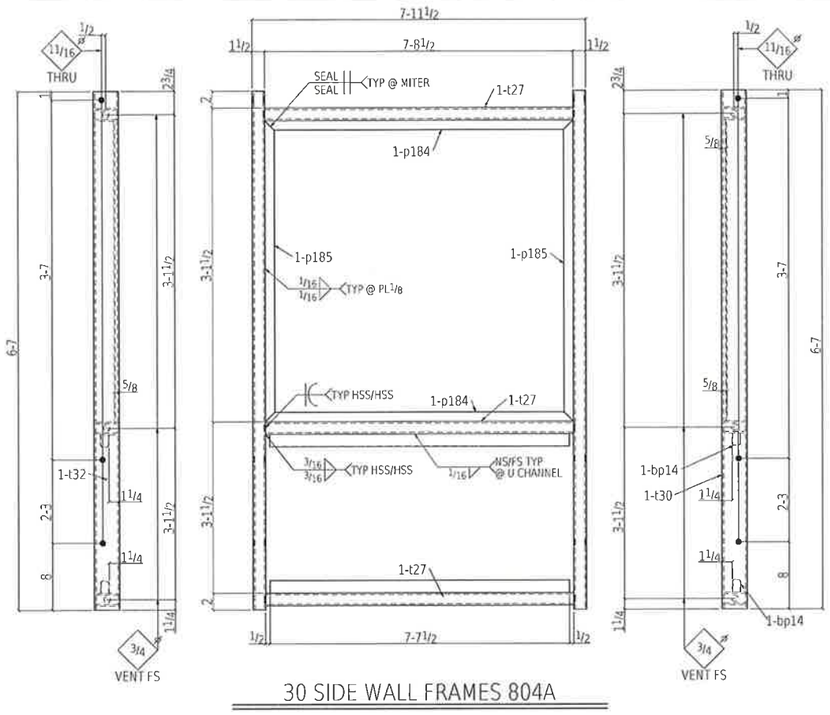

30 SIDE WALL FRAMES 804A

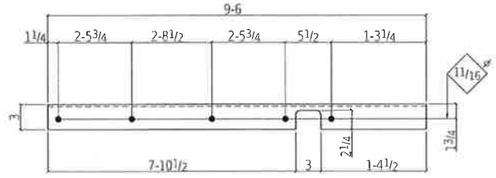

2 PURLINS 804B

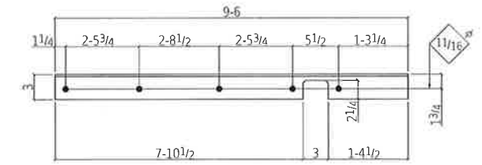

2 PURLINS 804C

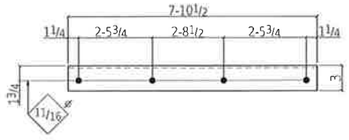

26 PURLINS 804D

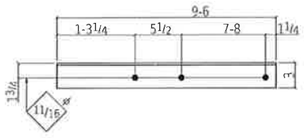

2 PURLINS 804E

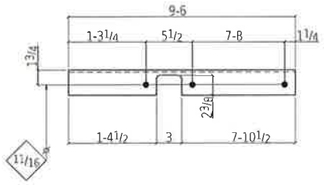

2 PURLINS 804F

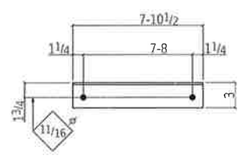

52 PURLINS 804G

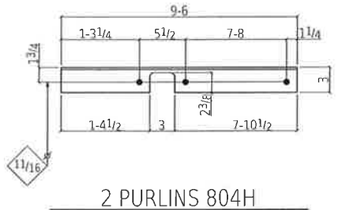

2 PURLINS 804H

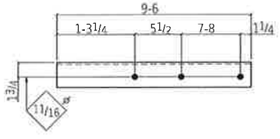

2 PURLINS 804J

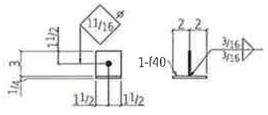

30 FIXTURE MOUNTS 804K

BILL OF MATERIAL

QTY total	Piece Mark	QTY unit			Length		Remarks	Weight Unit
30	804A		SIDE WALL FRAME				HOT DIP GALVANIZE	200
90	t27	3	HSS3x1 1/2x3/16	7	8 1/2		A500B	38
30	t30	1	HSS3x1 1/2x3/16	6	7		A500B	33
30	t32	1	HSS3x1 1/2x3/16	6	7		A500B	33
60	p184	2	PL 1/8x3 1/8	7	8 1/2		A36	4
60	p185	2	PL 1/4x3 1/8	3	0		A36	1
60	bp14	2	PL 1/8GAx6 1/2	0	3 11/16		BENT A36	5
			FIELD BOLTS					
84			5/8 D a A325N	0	6 1/2		+1HD WASH	
2			5/8 D a A325N	0	5		+1HD WASH	
6			5/8 D a A325N	0	4 3/4		+1HD WASH	
2	804B		PURLIN				HOT DIP GALVANIZE	39
2	a50	1	L3x2x1/4	9	6		A36	39
			FIELD BOLTS					
10			5/8 D a A325N	0	2		+1HD WASH	
2	804C		PURLIN				HOT DIP GALVANIZE	39
2	a52	1	L3x2x1/4	9	6		A36	39
26	804D		PURLIN				HOT DIP GALVANIZE	32
26	804D	1	L3x2x1/4	7	10 1/2		A36	32
			FIELD BOLTS					
52			5/8 D a A325N	0	2		+1HD WASH	
2	804E		PURLIN				HOT DIP GALVANIZE	39
2	a53	1	L3x2x1/4	9	6		SZE A36	39
			FIELD BOLTS					
3			5/8 D a A325N	0	2		+1HD WASH	
3			5/8 D a A325TC	0	2		+1HD WASH	
2	804F		PURLIN				HOT DIP GALVANIZE	39
2	a54	1	L3x2x1/4	9	6		SZE A36	39
52	804G		PURLIN				HOT DIP GALVANIZE	32
52	804G	1	L3x2x1/4	7	10 1/2		SZE A36	32
			FIELD BOLTS					
52			5/8 D a A325N	0	2		+1HD WASH	
2	804H		PURLIN				HOT DIP GALVANIZE	39
2	a56	1	L3x2x1/4	9	6		SZE A36	39
2	804M		PURLIN				HOT DIP GALVANIZE	39
2	a59	1	L3x2x1/4	9	6		SZE A36	39
			FIELD BOLTS					
3			5/8 D a A325N	0	2		+1HD WASH	
3			5/8 D a A325TC	0	2		+1HD WASH	
30	804K		FIXTURE MOUNT				HOT DIP GALVANIZE	1
30	f49	1	FB1/4x3	0	3		A36	1
30	f40	1	FB1/4x3	0	4		A36	1

Total weight: 9323

REV	DESCRIPTION	BY	CHK	DATE
0	FOR FABRICATION	RRP	KB	Jan 28 2015
A	FOR APPROVAL	RRP	KB	Oct 20 2014

FOR FABRICATION

Dave Hankins 1-28-15

DETAILING
JOB 2265
REF 54 OF 57

FABRICATION TECHNICAL SERVICES, INC.
307 N. LINCOLN STE. B, POST FALLS, ID 83854
(208) 457-8282 fax: (208) 457-8208
EMAIL: kevin@FTSsteeldetailing.com

HOLES DIA UNO: 13/16
SURF PREP SEE B.O.M.
FINISH: SEE B.O.M.

WELD 3/16 FILLET U.N.O. (E70XX)
W.P. (TAILS)
COL BASE PLATES ARE ALWAYS SECTION CUTS LOOKING DOWN

State of Alaska
Dept. of Transportation and Public Facilities
Marine Facilities Engineering

CONTRACTOR SUBMITTAL REVIEW

Checking is only for conformance with the design concepts of the Project and compliance with the information given in the Contract Documents. The Contractor is responsible for dimensions to be confirmed and correlated at the job site for information that pertains solely to the fabrication process or to techniques of construction for coordination of the work of all trades.

ACCEPTED ✔
ACCEPTED AS NOTED
RETURNED FOR CORRECTION

02/09/2015 Tim Doggett
Date Design Engineer

Record Drawings have been reviewed by the Project Engineer, and represent to the best of my knowledge, the project as constructed.

PE _____ Date 12/10/15

TOLERANCES:

(UNLESS OTHERWISE SPECIFIED)
3 PLACE DECIMALS +/- .01
2 PLACE DECIMALS +/- .03
FRACTIONS +/- 1/16
ANGLES +/- 2 DEGREES
MACHINE FINISHES 125 ✓U.N.

JESSE ENGINEERING CO.
1840 Marine View Drive, Tacoma, Washington 98422 Ph. 253-922-7433

PROJECT
IFA HOLLIS/CLARK BAY
FERRY TERMINAL IMPROVEMENTS

CONTRACTOR
WESTERN MARINE CONSTRUCTION

DATE 10-15-14
JESSE NO. 203980

DESCRIPTION
PEDESTRIAN BRIDGE
ENCLOSURE FRAME

DWG NO 804

Jan 28 2015 09:40:26 AM SHEET SIZE 24X36

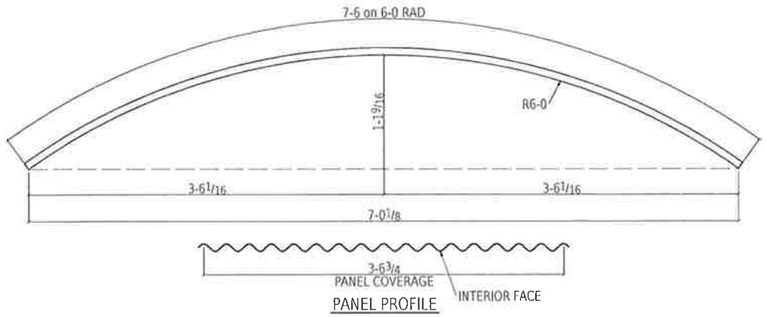

35 ROOF PANELS 805A



60 SIDING PANELS 805B

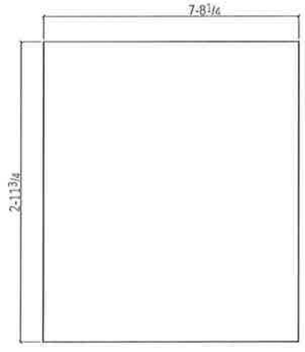

30 ACRYLLIC PANELS 805C

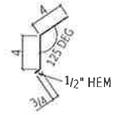

ONE FLASHING 805D

BILL OF MATERIAL

QTY total	Piece Mark	QTY unit	Description	Length		Remarks	Weight Unit
35	805A		ROOF PANEL			HOT DIP GALVANIZE	965
35	p183	1	24GA CORR ROOFING	7	7	ROLLED A36	965
60	805B		SIDING PANEL			HOT DIP GALVANIZE	11
60	m12	1	24 GA CORR SIDING	4	9 3/16	3 KSI	11
30	805C		ACRYLIC PANEL			NO FINISH	68
30	805C	1	236 ACRYLLIC CLEAR	7	8 1/16	3 KSI	68
ONE	805D		FLASHING			PRE-GALVANIZED	
1	805D	1	24GA FLASHING	250	0	LIF A36	

Total weight 36473

REV	DESCRIPTION	BY	CHK	DATE
0	FOR FABRICATION	RRP	KB	Jan 28 2015
A	FOR APPROVAL	RRP	KB	Oct 20 2014

FOR FABRICATION
Dave Hankins 1-28-15

DETAILING:
JOB: 2265
REF 54 OF 57

FABRICATION TECHNICAL SERVICES, INC.
307 N. LINCOLN STE. B. POST FALLS, ID 83854
(208) 457-8282 fax: (208) 457-8208
EMAIL: kevin@FTSsteeldetailing.com

HOLES DIA UNO: 13/16
SURF PREP SEE B.O.M.
FINISH: SEE B.O.M.

WELD 3/16 FILLET U.N.O. (E70XX)
W.P. (TAILS)
COL BASE PLATES ARE ALWAYS SECTION CUTS LOOKING DOWN

Record Drawings have been reviewed by the Project Engineer, and represent to the best of my knowledge, the project as constructed.
PE _____ Date 12/10/15

State of Alaska
Dept. of Transportation and Public Facilities
Marine Facilities Engineering

CONTRACTOR SUBMITTAL REVIEW

Checking is only for conformance with the design concepts of the Project and compliance with the information given in the Contract Documents. The Contractor is responsible for dimensions to be confirmed and correlated at the job site for information that pertains solely to the fabrication process or to techniques of construction for coordination of the work of all trades.

ACCEPTED ✓
ACCEPTED AS NOTED
RETURNED FOR CORRECTION

02/09/2015 Tim Doggett
Date Design Engineer

TOLERANCES:
(UNLESS OTHERWISE SPECIFIED)
3 PLACE DECIMALS +/- .01
2 PLACE DECIMALS +/- .03
FRACTIONS +/- 1/16
ANGLES +/- 2 DEGREES
MACHINE FINISHES 125 ✓U.N.

JESSE ENGINEERING CO.
1640 Marine View Drive, Tacoma, Washington 98422 Ph. 253-922-7433

PROJECT: IFA HOLLIS/CLARK BAY FERRY TERMINAL IMPROVEMENTS
CONTRACTOR: WESTERN MARINE CONSTRUCTION
DESCRIPTION: PEDESTRIAN BRIDGE DECK AND ACRYLIIC PANELS
DATE: 10-15-14
JOB NO: 203980
DWG NO: 805

Jan 28 2015 09:40:27 AM SHEET SIZE: 24X36

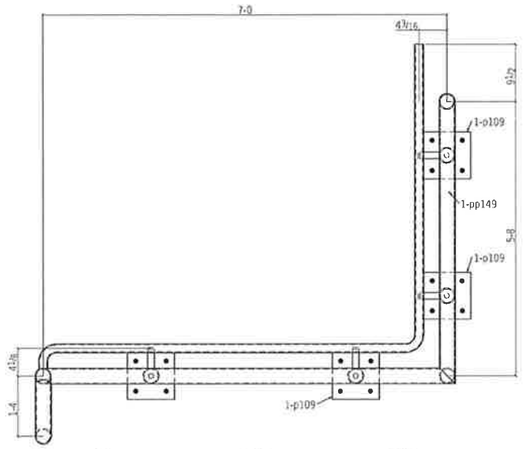

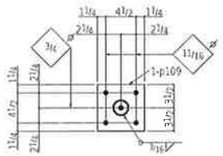

TYPICAL BASEPLATE

Section A-A
806A

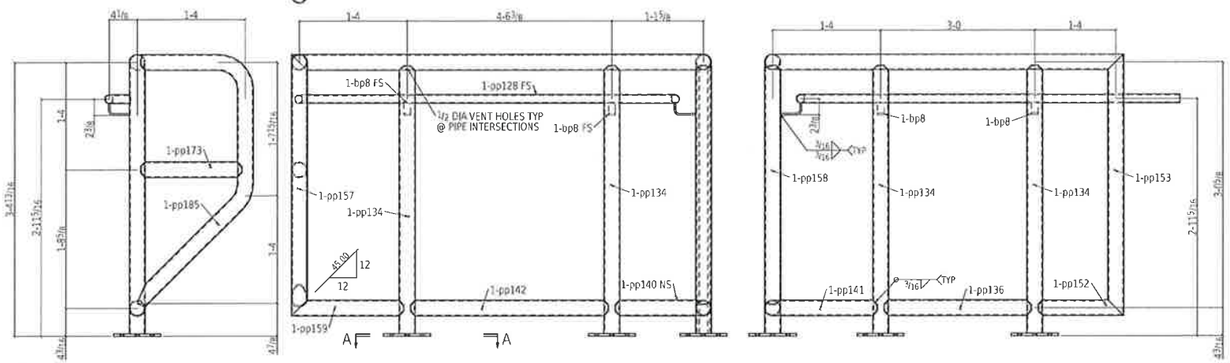

ONE RAIL 806A

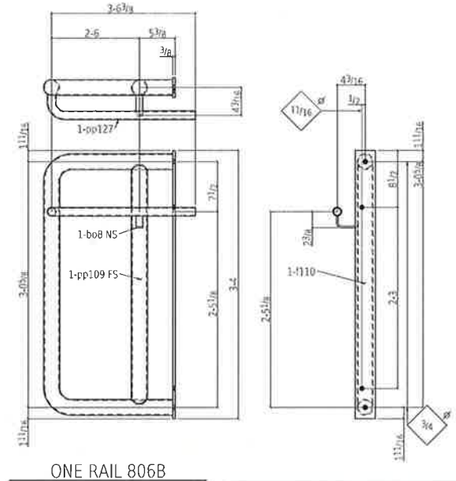

ONE RAIL 806B

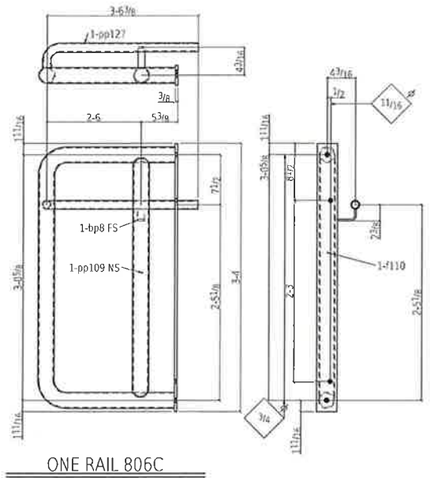

ONE RAIL 806C

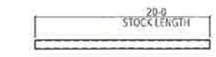

13 RAIL PIPES 806D

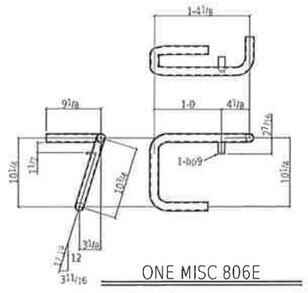

ONE MISC 806E

BILL OF MATERIAL

QTY Total	Piece Mark	QTY Unit	Description	Length		Remarks	Weight Unit
ONE	806A		RAIL			HOT DIP GALVANIZE	242
1	806A	1	PIPE 2 STD	7	2 3/8	A53B	26
1	pp149	1	PIPE 2 STD	5	10 3/8	A53B	21
1	pp142	1	PIPE 2 STD	4	5 3/8	A53B	16
1	pp185	1	PIPE 2 STD	4	5 1/8	A53B	16
4	pp134	4	PIPE 2 STD	3	3 15/16	A53B	12
1	pp157	1	PIPE 2 STD	3	3	A53B	12
1	pp153	1	PIPE 2 STD	3	3	A53B	12
1	pp158	1	PIPE 2 STD	2	11 5/8	A53B	11
1	pp135	1	PIPE 2 STD	2	11	A53B	11
1	pp159	1	PIPE 2 STD	1	4 11/16	A53B	5
1	pp152	1	PIPE 2 STD	1	4 11/16	A53B	5
1	pp141	1	PIPE 2 STD	1	4 11/16	A53B	5
1	pp173	1	PIPE 2 STD	1	3	A53B	5
1	pp140	1	PIPE 2 STD	1	2 5/16	A53B	4
1	pp128	1	PIPE 1 STD	12	10 5/8	A53B	22
4	p109	4	PL 3/4x7	0	7	A36	5
4	bo8	4	PL 1/4x4 7/16	0	1	RENT A36	0
			FIELD BOLTS				
16			5/8 Dia A325N	0	2 1/2	+1PL THD WASH	
ONE	806B		RAIL			HOT DIP GALVANIZE	63
1	806B	1	PIPE 2 STD	8	11 3/4	A53B	33
1	pp109	1	PIPE 2 STD	2	11 5/8	A53B	11
1	pp127	1	PIPE 1 STD	3	9 11/16	A53B	6
1	f110	1	FB 3x3	3	4	A36	13
1	bo8	1	PL 1/4x4 7/16	0	1	RENT A36	0
			FIELD BOLTS				
2			5/8 Dia A325N	0	5	+1HD WASH	
ONE	806C		RAIL			HOT DIP GALVANIZE	63
1	806C	1	PIPE 2 STD	8	11 3/4	A53B	33
1	pp109	1	PIPE 2 STD	2	11 5/8	A53B	11
1	pp127	1	PIPE 1 STD	3	9 11/16	A53B	6
1	f110	1	FB 3x3	3	4	A36	13
1	bo8	1	PL 1/4x4 7/16	0	1	RENT A36	0
13	806D		RAIL PIPE			HOT DIP GALVANIZE	34
13	806D	1	PIPE 1 STD	20	0	STOCK LENGTH A53B	34
ONE	806E		MISC				7
1	806E	1	PIPE 1 STD	3	9/16	A53B	6
1	bo9	1	PL 1/4x3 3/16	0	1	RENT A36	0

Total weight 811

Record Drawings have been reviewed by the Project Engineer, and represent to the best of my knowledge, the project as constructed.

PE _____ Date 12/10/15

State of Alaska
Dept. of Transportation and Public Facilities
Marine Facilities Engineering

CONTRACTOR SUBMITTAL REVIEW

Checking is only for conformance with the design concepts of the Project and compliance with the information given in the Contract Documents. The Contractor is responsible for dimensions to be confirmed and correlated at the job site for information that pertains solely to the fabrication process or to techniques of construction for coordination of the work of all trades.

ACCEPTED ✓
ACCEPTED AS NOTED
RETURNED FOR CORRECTION

02/09/2015 Tim Doggett
Date Design Engineer

FOR FABRICATION
Dave Hawkins 1-28-15

REV	DESCRIPTION	BY	CHK	DATE
0	FOR FABRICATION	RRP	KB	Jan 28 2015
A	FOR APPROVAL	RRP	KB	Oct 20 2014

DETAILING:
JOB: 2265
REF 54 OF 57

FABRICATION TECHNICAL SERVICES, INC.
307 N. LINCOLN STE. B, POST FALLS, ID 83854
(208) 457-8282 fax: (208) 457-8208
EMAIL: kevin@FTSsteeldetailing.com

HOLES DIA UNO: 13/16
SURF PREP SEE B.O.M.
FINISH: SEE B.O.M.

WELD 3/16 FILLET U.N.O. (E70XX)
W.P. (TAILS)
COL BASE PLATES ARE ALWAYS SECTION CUTS LOOKING DOWN

NOTES:
1. SEAL ALL WELDS.
2. PROVIDE WEEP HOLES @ ALL ENCLOSED SECTIONS

TOLERANCES:
(UNLESS OTHERWISE SPECIFIED)
3 PLACE DECIMALS +/- .01
2 PLACE DECIMALS +/- .03
FRACTIONS +/- 1/16
ANGLES +/- 2 DEGREES
MACHINE FINISHES 125 √U.N.

JESSE ENGINEERING CO.
1840 Marine View Drive, Tacoma, Washington 98422 Ph. 253-922-7433

PROJECT: IFA HOLLIS/CLARK BAY FERRY TERMINAL IMPROVEMENTS
CONTRACTOR: WESTERN MARINE CONSTRUCTION
DESCRIPTION: PEDESTRIAN BRIDGE RAILING
DATE: 10-15-14
JOB NO: 203980
DWG NO: 806

SHEET SIZE 24X36
09:40:27 AM
Jan 28 2015

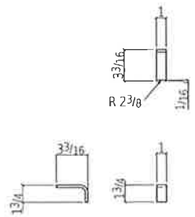

6 PL 1/4x4 7/16x0-1 bp8
GRADE: A36

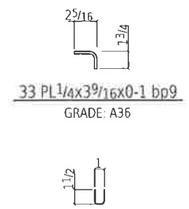

33 PL 1/4x3 9/16x0-1 bp9
GRADE: A36

60 PL18GAx91 1/2x0-3 11/16 bp14
GRADE: A36

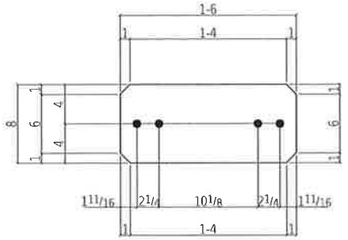

ONE FB 1/2x8x1-6 f28
GRADE: A709-50

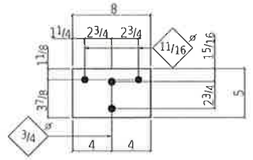

16 FB 1/4x5x0-8 f45
GRADE: A36

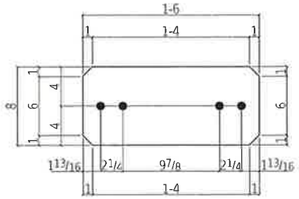

ONE FB 1/2x8x1-6 f67
GRADE: A709-50

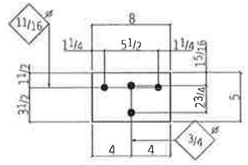

32 FB 1/4x5x0-8 f76
GRADE: A36

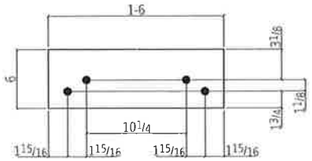

ONE FB 3/8x6x1-6 f177
GRADE: A709-50

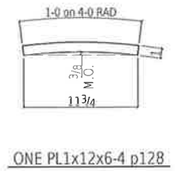

ONE PL1x12x6-4 p128
GRADE: A36

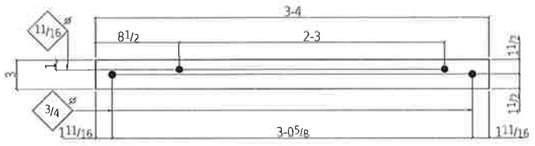

2 FB 3/8x3x3-4 f110
GRADE: A36

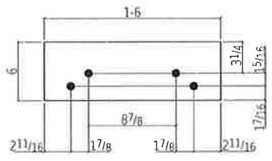

ONE FB 3/8x6x1-6 f183
GRADE: A709-50

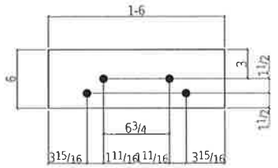

7 FB 3/8x6x1-6 f188
GRADE: A709-50

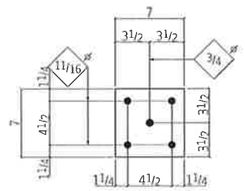

4 PL 3/8x7x0-7 p109
GRADE: A36

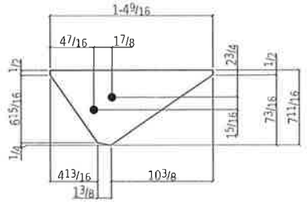

4 PL 1/2x7 11/16x1-4 9/16 p154
GRADE: A709-50

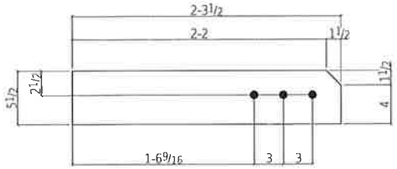

2 PL 1/2x5 1/2x2-3 1/2 p157
GRADE: A709-50

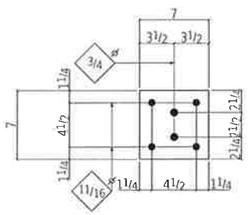

32 PL 3/8x7x0-7 p167
GRADE: A36

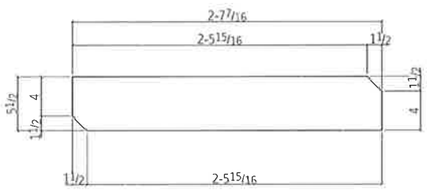

2 PL 1/2x5 1/2x2-7 7/16 p170
GRADE: A709-50

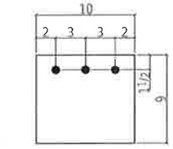

18 PL 3/8x9x0-10 p173
GRADE: A709-50

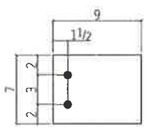

16 PL 3/8x7x0-9 p191
GRADE: A709-50

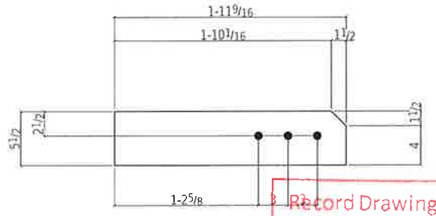

2 PL 1/2x5 1/2x1-11 9/16 p174
GRADE: A709-50

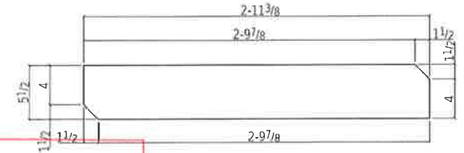

2 PL 1/2x5 1/2x2-11 3/8 p181
GRADE: A709-50

Record Drawings have been reviewed by the Project Engineer, and represent to the best of my knowledge, the project as constructed.

PE _____ Date 12/10/15

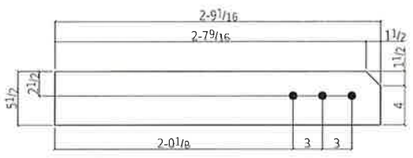

14 PL 3/8x5 1/2x2-9 1/16 p186
GRADE: A709-50

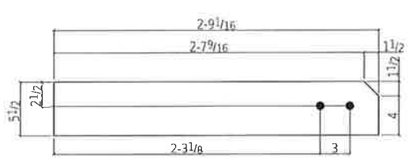

16 PL 3/8x5 1/2x2-9 1/16 p192
GRADE: A709-50

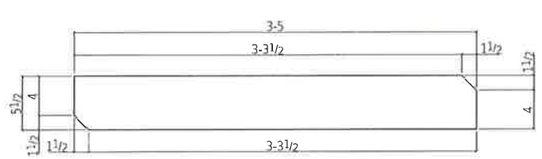

4 PL 3/8x5 1/2x3-5 p193
GRADE: A709-50

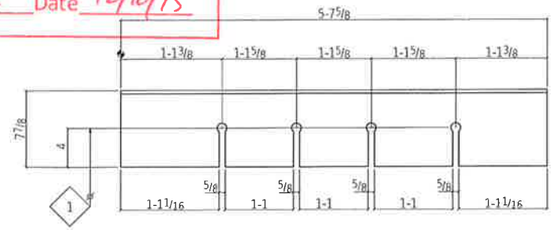

17 WT8x13x5-7 5/8 wt3
GRADE: A709-50

FOR FABRICATION

Dave Hankins 1-28-15

TOLERANCES:

(UNLESS OTHERWISE SPECIFIED)
3 PLACE DECIMALS +/- .01
2 PLACE DECIMALS +/- .03
FRACTIONS +/- 1/16
ANGLES +/- 2 DEGREES
MACHINE FINISHES 125 √ U.N.

REV	DESCRIPTION	BY	CHK	DATE
0	FOR FABRICATION	RRP	KB	Jan 28 2015

NOTES:
1. ERECT ALL MEMBER WITH THE MARKED END IN THE SAME RELATIVE POSITION AS SHOWN ON THE ERECTION DRAWING.
2. B.O.S.=BOTTOM OF STEEL. ELEVATIONS REFERENCED (xxx-x x/x) ARE TOP OF STEEL.
3. PLEASE PROVIDE INFORMATION AND VERIFICATIONS INDICATED IN CLOUDED AREAS. CLOUDED NOTES WITH NO REMARKS FROM THE APPROVAL AUTHORITY WILL BE CONSIDERED AS AN AFFIRMATION.

DETAILING: FABRICATION TECHNICAL SERVICES, INC.
www.FTSsteeldetailing.com
CONTACT: Kevin@FTSsteeldetailing.com
ph: (208) 457-8282

JESSE ENGINEERING CO.
1840 Marine View Drive, Tacoma, Washington 98422 Ph. 253-922-7433

REF: SHEET 800 THRU 806

PROJECT: IFA HOLLIS/CLARK BAY FERRY TERMINAL IMPROVEMENTS
CONTRACTOR: WESTERN MARINE CONSTRUCTION
DESCRIPTION: PED BRIDGE PARTS
DATE: 01-27-15
FABRICATION JOB NO: 203933
DWG NO: G800

JOB NO. ####
SHEET SIZE 24X36
09:40:29 AM
Jan 28 2015

67449 / 662(2) Electrical System

LIGHT FIXTURE SCHEDULE

TYPE	LOCATION	MANUFACTURER AND CATALOG NUMBER (OR APPROVED EQUAL)	LUMINAIRE DESCRIPTION	MOUNTING TYPE	MOUNTING HEIGHT	LAMPS	BALLAST/DRIVER	TOTAL INPUT WATTS
A	PARKING LOT	LITHONIA #AS1-175M-SR4SC-277-SPA-LPI-DM28AS (1)	13"Wx7"Hx22.25"L ARCHITECTURAL AREA LUMINAIRE, DIE-CAST ALUMINUM HOUSING, TYPE IV FORWARD THROW, SHARP CUTOFF LIGHT DISTRIBUTION, SQUARE POLE MOUNTING, 180 DEGREE BOLT DRILLING PATTERN AND DARK BRONZE FINISH.	POLE	24'-0" AFG	1EA 175W METAL HALIDE	277V MAGNETIC BALLAST	210
B	VEHICLE TRANSFER BRIDGE	LITHONIA #AS1-175M-SR2-120-SPA-LPI-DM19AS (1)	SAME AS LIGHT FIXTURE TYPE 'A' EXCEPT WITH DIFFERENT VOLTAGE, TYPE II LIGHT DISTRIBUTION AND 90 DEGREE BOLT DRILLING PATTERN.	POLE	12'-0" AFF, SEE SHEET NOTE 3.	1EA 175W METAL HALIDE	120V MAGNETIC BALLAST	210
C	PEDESTRIAN BRIDGE	LITHONIA #DMW-2-32-MVOLT-GEB10PS-STSL-WFL	8"Wx50"Lx4.75"D ENCLOSED AND GASKETED, SURFACE MOUNT, WET LOCATION, 2.25" DEEP HIGH IMPACT ACRYLIC DIFFUSER, STAINLESS STEEL LATCHES, WET LOCATION FITTINGS AND WHITE FINISH.	SURFACE	CEILING	2EA 32W TB	120/277V PROGRAMMED RAPID START BALLAST	60
D	GANGWAYS AND CATWALKS	PAULUHN #7178	4.25"DIA.x9"H MARINE AND WATER TIGHT JELLY JAR, CAST MARINE BRASS HOUSING AND GUARD, POLYCARBONATE GLOBE, STAINLESS STEEL HARDWARE, ENCLOSED AND GASKETED.	SURFACE	SEE SHEET NOTE 1.	1EA 100W INCANDESCENT	120V N/A	100
E	AS SHOWN	SEALITE #SL-80-RED	SOLAR MARINE LANTERN, RED COLOR, 2-3NM RANGE, 360 DEGREE HORIZONTAL OUTPUT, (6)MULTICRYSTALLINE SOLAR MODULE TYPE PANELS, SEALED NICKEL METAL HALIDE BATTERY - AVERAGE LIFE 5 YEARS, LEXAN POLYCARBONATE LENS AND BODY, IP68 RATED.	POST	SEE SHEET NOTE 2.	6EA 1.4W LED	3.6V DC NICKEL METAL HALIDE BATTERY	8.4

SHEET NOTES:

1. SEE SHEET 48 OF THE CLARK BAY FERRY TERMINAL IMPROVEMENTS DRAWINGS FOR MOUNTING GANGWAY AND CATWALK LIGHT TYPE 'D' FIXTURE.
2. SEE SHEET 28 OF THE CLARK BAY FERRY TERMINAL IMPROVEMENTS DRAWINGS FOR MOUNTING NAVIGATION LIGHT TYPE 'E' FIXTURE.
3. SEE DETAIL 1 ON SHEET 19 OF THE CLARK BAY FERRY TERMINAL IMPROVEMENTS DRAWINGS FOR MOUNTING TRANSFER BRIDGE POLE LIGHT TYPE 'B' FIXTURE.
4. LIGHT FIXTURE 'A' AND 'B' HAS A UNIQUE DRILLING PATTERN TO BE SPECIFIED WHEN ORDERING LIGHT POLES. CATALOG NUMBER INDICATES DRILLING POLE PATTERN FOR EACH LIGHT FIXTURE.

LEGEND

	FLUORESCENT FIXTURE - SURFACE MTD
	LIGHT FIXTURE - SURFACE MTD ON GANGWAY AND CATWALK RAILING
	POLE MOUNTED AREA LIGHT - OUTDOORS
	NAVIGATION LIGHT - OUTDOORS
(A)	FIXTURE TAG (LETTER INDICATES TYPE)
(P)	PHOTOCELL
	CONDUIT, CONCEALED
#10	NUMBER AND SIZE OF WIRES (NO MARKS = 3 #12)
A-3	HOMERUN TO PANEL (PANEL AND CIRCUIT No.)
—OH/E—	OVERHEAD ELECTRICAL LINE (12470/7200V UON)
	EXISTING PANEL
	DUPLEX RECEPTACLE WITH GROUND FAULT CIRCUIT INTERRUPTER
	SHIP TO SHORE NEMA 3R, 100A, 480V, 3Ø POWER RECEPTACLE
	SHORE TO SHIP NEMA 3R, 100A, 480V, 3Ø POWER RECEPTACLE
	JUNCTION BOX
	MOTOR (SIZED AS NOTED)
	DISCONNECT SWITCH
	COMBINATION DISCONNECT/MAGNETIC MOTOR STARTER
	NEMA 4X STAINLESS STEEL MARINE GRADE JUNCTION BOX
	POLE MOUNTED AREA LIGHT TO BE REMOVED (DASHED OR DOTTED LINES INDICATE ITEMS TO BE REMOVED TYPICAL)
	NOTE TAG (No. INDICATES NOTE)
AFF	ABOVE FINISHED FLOOR
AFG	ABOVE FINISHED GRADE
C	CONDUIT
CU	COPPER
E	DENOTES EXISTING ITEM
GFCI	GROUND FAULT CIRCUIT INTERRUPTER
GRC	GALVANIZED RIGID CONDUIT
HDPE	HIGH DENSITY POLYETHYLENE CONDUIT
MCB	MAIN CIRCUIT BREAKER
MDP	MAIN DISTRIBUTION PANEL
MH	METAL HALIDE
NEC	NATIONAL ELECTRICAL CODE
OFCI	OWNER FURNISHED CONTRACTOR INSTALLED
PVC	POLYVINYL CONDUIT
QTY	QUANTITY
R	DENOTES RELOCATED ITEM
TYP	TYPICAL
UON	UNLESS OTHERWISE NOTED
WP	WEATHERPROOF
WR	WEATHER RESISTANT

Record Drawings have been reviewed by the Project Engineer, and represent to the best of my knowledge, the project as constructed.

PE _____ Date 12/04/15

STATE OF ALASKA — 49TH — TIMOTHY E. HALL — 12-9131 — 12/10/14 — REGISTERED PROFESSIONAL ENGINEER

RSA Engineering, Inc.
MECHANICAL AND ELECTRICAL CONSULTING ENGINEERS
670 West Fireweed Lane, Suite 200
Anchorage, Alaska 99503
Phone (907) 278-0521
Fax (907) 276-1751
191 East Swanson Ave.
Wasilla, Alaska 99654
Phone (907) 357-1521
Fax (907) 357-1751

CLARK BAY FERRY
TERMINAL IMPROVEMENTS
HOLLIS, ALASKA

REVISIONS:

DRAWN BY: MJC
CHECKED BY: DKB/TEH
DATE: 12/10/2014
JOB NUMBER: L4169.00
DWG FILE: L4169_ESERIES

DRAWING TITLE:
ELECTRICAL LEGEND AND FIXTURE SCHEDULE

SHEET:
E0.1

1 of 8

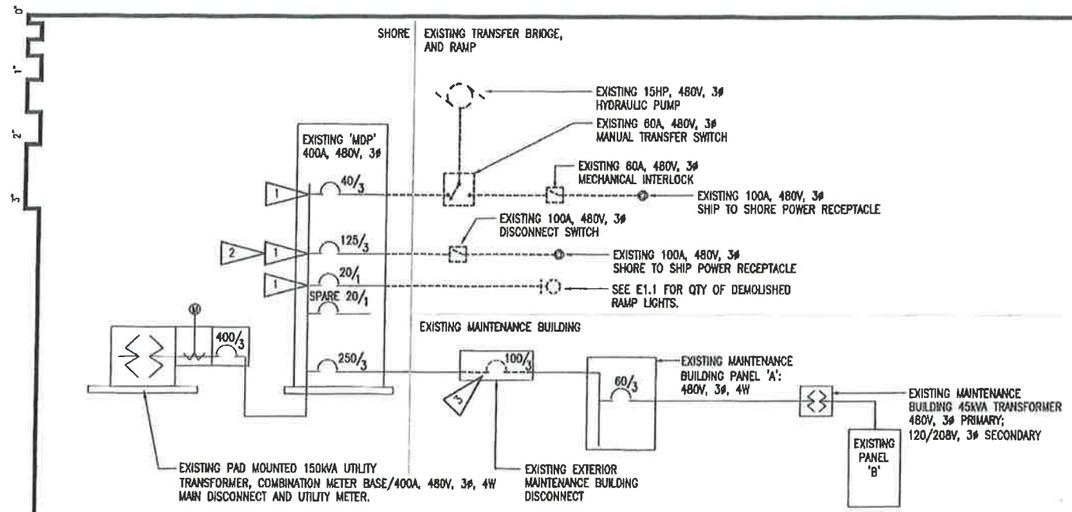

1 POWER ONE-LINE DIAGRAM - DEMOLITION
NO SCALE

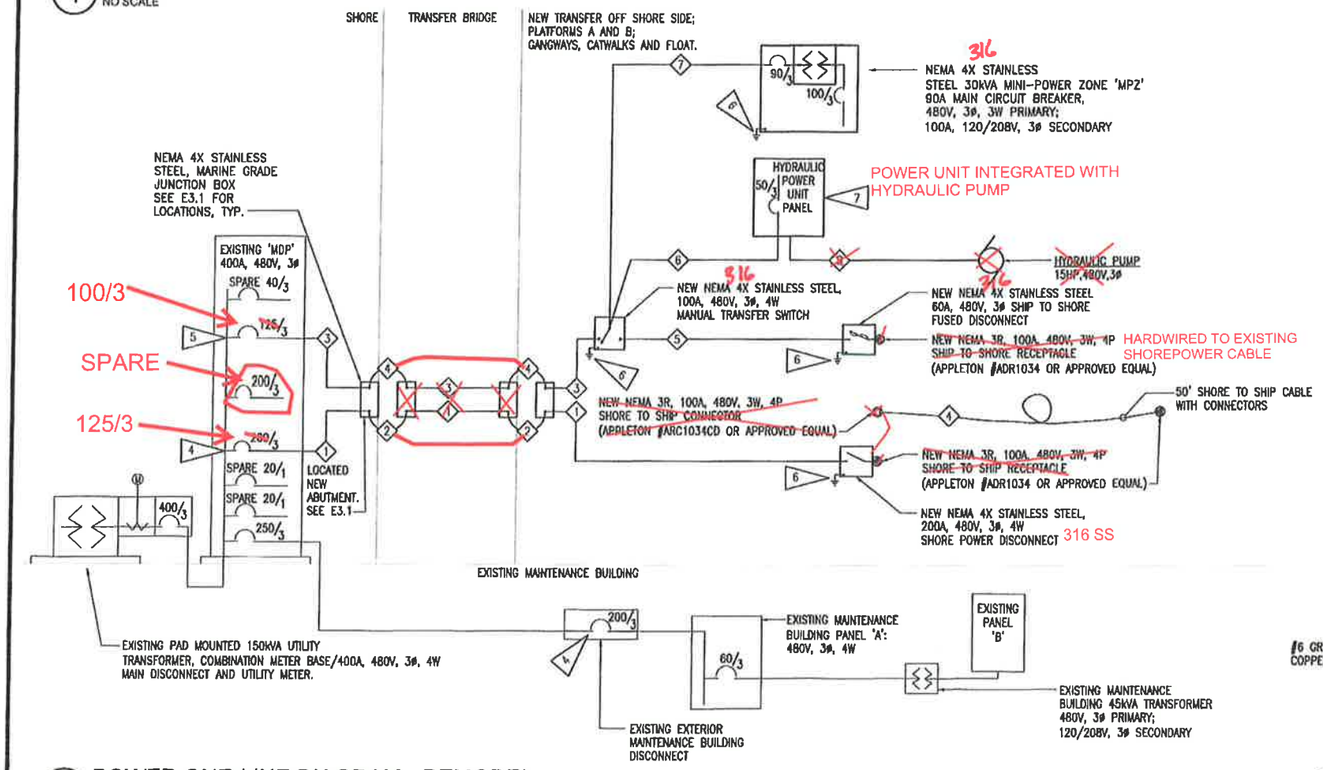

2 POWER ONE-LINE DIAGRAM - REMODEL
NO SCALE

GENERAL NOTES:

A. THE INFORMATION SHOWN ON THIS DRAWING IS TAKEN FROM AS-BUILT DRAWINGS AND A NON-DESTRUCTIVE WALK THROUGH OF THE FACILITY. THERE IS NO WARRANTY OR GUARANTEE AS TO THE ACCURACY OF THE INFORMATION SHOWN HERE-IN. THE CONTRACTOR SHALL FIELD VERIFY ALL ITEMS SCHEDULED FOR DEMOLITION PRIOR TO START OF WORK.

B. THE OWNER SHALL HAVE FIRST RIGHT OF REFUSAL ON ALL SALVAGEABLE MATERIALS. THE CONTRACTOR SHALL DELIVER SALVAGED MATERIALS TO A WAREHOUSE AS DIRECTED BY THE OWNER. THE CONTRACTOR SHALL DISPOSE OF, OFF SITE, ALL UNWANTED MATERIALS.

C. DASHED OR DOTTED LINES INDICATE ITEMS TO BE REMOVED. SOLID LINES INDICATE EXISTING ITEMS TO REMAIN.

SHEET NOTES:

1. RETAIN CIRCUIT BREAKERS AS SPARES.
2. SEE 2/E0.2 FOR REUSE OF 125A 3P CIRCUIT BREAKER.
3. SEE SHEET NOTE 4 AND 2/E0.2 FOR NEW CIRCUIT BREAKER.
4. PROVIDE NEW CIRCUIT BREAKER, SIZED AS SHOWN. CIRCUIT BREAKER TO BE COMPATIBLE AND LISTED FOR USE IN EXISTING BUILDING DISCONNECT AND SHALL HAVE MINIMUM SHORT CIRCUIT RATING TO MATCH RATING OF DISCONNECT.
5. REUSE SPARE 125A 3P CIRCUIT BREAKER FOR CONNECTION TO NEW MANUAL TRANSFER SWITCH.
6. SEE 3/E0.2 GROUNDING DETAIL.
7. CONTRACTOR TO INSTALL HYDRAULIC POWER UNIT PANEL. CIRCUIT PANEL PER HYDRAULIC MANUFACTURES INSTRUCTIONS.
8. IF FLEXIBLE CONNECTIONS ARE REQUIRED, MARINE TYPE CABLE CAN SUBSTITUTE CONDUIT AND CONDUCTORS.

B **FEEDER SCHEDULE** (ALL CONDUCTORS SHALL BE COPPER)

1	(1) 2"C, 4#3/0, 1#6 GND – XHHW
2	(1) 4#2/0, W/GND. TYPE – W OR G/GC CABLE
3	(1) 1.5"C, 4#1, 1#6 GND – XHHW
4	(1) 4#2, W/GND. TYPE – W OR G/GC CABLE
5	(1) 1.25"C, 3#4, 1#6 GND – XHHW
6	(1) 1"C, 4#6, 1#6 GND – XHHW
7	(1) 1.25"C, 3#3, 1#6 GND – XHHW
8	(1) 0.75"C, 3#10, 1#12 GND – XHHW

Record Drawings have been reviewed by the Project Engineer, and represent to the best of my knowledge, the project as constructed.

PE _____ Date 12/10/15

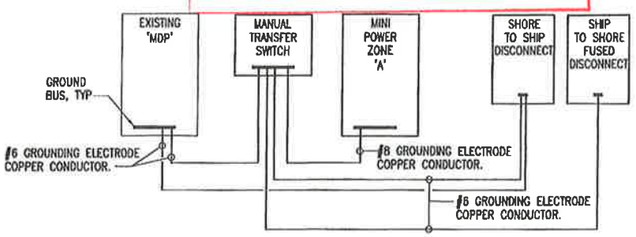

3 GROUNDING DETAIL
NOT TO SCALE

STATE OF ALASKA — 49th — ERIC F. HILL — R-101 12/31/14 — REGISTERED PROFESSIONAL ENGINEER

RSA Engineering, Inc.
MECHANICAL AND ELECTRICAL CONSULTING ENGINEERS
670 West Fireweed Lane, Suite 200 Anchorage, AK 99503 Phone (907) 276-5021 Fax (907) 276-1731
191 East Swanson Ave. Wasilla, AK 99654 Phone (907) 357-7521 Fax (907) 357-7731

CLARK BAY FERRY TERMINAL IMPROVEMENTS
HOLLIS, ALASKA

REVISIONS:

DRAWN BY: MJC
CHECKED BY: DKB/TEH
DATE: 12/10/2014
JOB NUMBER: L4199.00
DWG FILE: L4199_ESERIES

DRAWING TITLE: POWER ONE-LINE DIAGRAMS - DEMOLITION, REMODEL AND DETAIL

SHEET: E0.2

SECTION 662 ELECTRICAL POWER AND LIGHITNG SYSTEMS

662-1.01 DESCRIPTION

THIS WORK SHALL INCLUDE FURNISHING ALL LABOR, MATERIAL, EQUIPMENT, INCIDENTALS AND SERVICES REQUIRED TO DESIGN AND INSTALL A POWER AND LIGHTING SYSTEM AS INDICATED ON THE PLANS AND IN CONFORMANCE WITH THESE SPECIFICATIONS AND THE CONTRACTOR'S ELECTRICAL DESIGN PLANS.

POWER SYSTEM INCLUDES SUPPLYING NEW OR RESTORING EXISTING POWER FOR LIGHTING ON THE BRIDGE AND/OR GANGWAYS, AND POWER FOR CONTROLS ON THE INTERMEDIATE RAMP AND APRON. THE LIGHTING SYSTEM ILLUMINATES THE BRIDGE AND/OR GANGWAYS.

THIS WORK SHALL ALSO INCLUDE FURNISHING ALL LABOR, MATERIAL, EQUIPMENT, INCIDENTALS AND SERVICES REQUIRED TO PREPARE A FINAL ELECTRICAL DESIGN AND INSTALL ELECTRICAL FEATURES ASSOCIATED WITH REPLACEMENT OF HYDRAULICS POWER CONTROLS AS INDICATED ON THE PLANS.

662-2.01 MATERIALS AND EQUIPMENT, GENERAL

ALL MATERIALS, SUPPLIES AND EQUIPMENT SHALL BE NEW AND SHALL BE THE STANDARD PRODUCTS OF MANUFACTURERS REGULARLY ENGAGED IN THE PRODUCTION OF SUCH ITEMS AND SHALL BE THE MANUFACTURER'S LATEST STANDARD DESIGN. LIKE ITEMS OF EQUIPMENT SHALL BE THE PRODUCT OF A SINGLE MANUFACTURER. MANUFACTURER SHALL HAVE IN EFFECT INDUSTRY RECOGNIZED WRITTEN QUALITY CONTROL FOR ALL MATERIALS AND ALL PHASES OF THE MANUFACTURING PROCESS, AND SHALL HAVE UNDERWRITER'S CERTIFICATION.

LIGHTING EQUIPMENT – PROVIDE AND INSTALL ALL LIGHTING EQUIPMENT OR APPROVED EQUAL AS SHOWN ON THE DRAWINGS AND DESCRIBED IN THE "FIXTURE SCHEDULE". PROVIDE LIGHTING EQUIPMENT COMPLETE, WIRED, ASSEMBLED, WITH PROPER FLANGES, MOUNTING SUPPORTS, HARDWARE, ETC.

BALLASTS: PROVIDE PROGRAMMED RAPID START ELECTRONIC BALLASTS WITH A MAXIMUM THD OF 10% AND A MINIMUM BALLAST FACTOR OF .88 FOR ALL FLUORESCENT FIXTURES AND HIGH POWER FACTOR, REGULATING OR CONSTANT WATTAGE TYPE BALLASTS FOR HID FIXTURES. PROVIDE A UL LISTED, 4A, 600V, LUMINAIRE DISCONNECT WITH TIN-PLATED BRASS CONTACTS, FINGER-SAFE POLYCARBONATE FEMALE HOUSING, 105° C TEMPERATURE RATING, AND TWO OR THREE-POLE CONFIGURATION TO MATCH LOAD SERVED. THOMAS & BETTS STA-KON SERIES OR APPROVED EQUAL.

LAMPS: T8 FLUORESCENT LAMPS SHALL BE 4100 K, TRI-PHOSPHOR, LINEAR FLUORESCENT LAMP WITH A MINIMUM CRI OF 85, AND RATED LIFE OF 24,000 HOURS (BASED ON 3 HOURS PER START USING PROGRAMMED START BALLAST). ACCEPTABLE MANUFACTURER/MODEL: PHILIPS 'ALTO PLUS T8,, SYLVANIA 'OCTRON 800XP ECOLOGIC,, GE 'STARTCOAT ECOLUX XL EXTRA-LIFE,, OR APPROVED EQUAL. METAL HALIDE LAMPS SHALL BE 4000K, LAMPS WITH A MINIMUM CRI OF 70, CLEAR FOR POLE-MOUNTED LIGHT FIXTURES AND PHOSPHOR-COATED FOR ALL OTHER LIGHT FIXTURES. LAMPS SHALL BE SELECTED SPECIFICALLY FOR THE ORIENTATION IN WHICH THEY WILL BE INSTALLED I.E. HORIZONTAL OR VERTICAL, UNIVERSAL BURN LAMPS ARE NOT ACCEPTABLE. INCANDESCENT LAMPS SHALL BE INSIDE FROSTED TYPE RATED 130 VOLTS.

LIGHTING POLES – PROVIDE AND INSTALL LIGHTING POLES AS SHOWN ON THE DRAWINGS. PROVIDE LIGHTING POLES WITH PROPER FLANGES, MOUNTING SUPPORTS, HARDWARE, ETC.

PERFORMANCE REQUIREMENTS: DEAD LOAD, WEIGHT OF LUMINARIE AND ITS HORIZONTAL AND VERTICAL SUPPORTS, AND SUPPORTING STRUCTURE, APPLIED AS STATED IN AASHTO LTS-3. LIVE LOAD, SINGLE LOAD OF 500 LBF, DISTRIBUTED AS STATED IN AASHTO LTS-3. ICE LOAD, LOAD OF 3 LBS/SQ.FT., APPLIED AS STATED IN AASHTO LTS-3. WIND LOAD, PRESSURE OF WIND ON STANDARD AND LUMINAIRE, CALCULATED AND APPLIED AS STATED IN AASHTO LTS-3. WIND SPEED FOR CALCULATING WIND LOAD FOR POLES 50 FEET IN HEIGHT OR LESS IS 110 MPH.

WIND LOAD STRENGTH OF POLES: ADEQUATE AT INDICATED HEIGHTS ABOVE GRADE WITHOUT FAILURE, PERMANENT DEFLECTION, OR WHIPPING IN STEADY WINDS OF SPEED INDICATED IN PERFORMANCE REQUIREMENTS, WITH A GUST FACTOR OF 1.3. STRENGTH ANALYSIS, FOR EACH POLE, MULTIPLY THE ACTUAL EQUIVALENT PROJECTED AREA OF LUMINAIRES AND BRACKETS BY A FACTOR OF 1.1 TO OBTAIN THE EQUIVALENT PROJECTED AREA TO BE USED IN POLE SELECTION STRENGTH ANALYSIS.

MOUNTINGS, FASTENERS, AND APPURTENANCES: CORROSION RESISTANT ITEMS COMPATIBLE WITH SUPPORT COMPONENTS. MATERIAL, SHALL NOT CAUSE GALVANIC ACTION AT CONTACT POINTS. MOUNTINGS, CORRECTLY POSITION LUMINARIES ATTACHMENT TO PROVIDE INDICATED LIGHT DISTRIBUTION. ANCHOR BOLTS, LEVELING NUTS, BOLT CAPS, AND WASHERS, HOT DIP GALVANIZED AFTER FABRICATION UNLESS STAINLESS STEEL ITEMS ARE INDICATED. ANCHOR BOLT TEMPLATE, PLYWOOD OR STEEL.

FEATURES AND FABRICATION: COMPLY WITH AASHTO LTS-3 IN STRUCTURAL DESIGN OF POLES. COMPLY WITH ASTM A 500, GRADE B, CARBON STEEL WITH A MINIMUM YIELD OF 46,000 PSIG; 1 PIECE CONSTRUCTION UP TO 40 FEET IN LENGTH WITH ACCESS HANDHOLE IN POLE WALL. HANDHOLE, WEATHERTIGHT, 3x5 INCH MINIMUM WITH COVER FOR ACCESS, LOCATE 18 INCHES ABOVE BASE PLATE. GROUNDING AND BONDING LUGS, WELDED ½ INCH THREADED LUG, LISTED FOR ATTACHING GROUNDING AND BONDING CONDUCTORS AND ACCESSIBLE THROUGH HANDHOLE. BRACKETS FOR LUMINAIRES, STRUCTURAL SUPPORTS TO COMPLY WITH LUMINAIRE MOUNTING REQUIREMENTS. DETACHABLE, WITH POLE AND ADAPTER FITTINGS. ADAPTER FITTING WELDED TO POLE AND BRACKET, AND THEN BOLTED TOGETHER WITH STAINLESS STEEL BOLTS. MATCH FINISH OF POLE AND SUPPORT STRUCTURE ON ARM, BRACKET, AND TENONO MOUNT MATERIALS. GALVANIZED FINISH, AFTER FABRICATION, HOT DIP GALVANIZE COMPLYING WITH ASTM A 123/A 123M.

NAVIGATION LIGHTS – SHALL BE A SELF CONTAINED , SOLAR POWERED, LED WITH NO EXTERNAL BATTERIES OR WIRING, SEALITE, MODEL SL-60-RED OR APPROVED EQUAL. LIGHT SHALL BE RED IN COLOR AND SET TO FLASH AT 6 SECOND INTERVALS. LIGHT SHALL BE RATED FOR A VISIBILITY OF THREE NAUTICAL MILES. BATTERY LIFE SHALL BE RATED FOR A PERIOD OF 5 YEARS WITH NO MAINTENANCE OR SERVICING.

RECEPTACLES – PROVIDE DUPLEX CONVENIENCE RECEPTACLES WITH CLASS "A" INTEGRAL GROUND FAULT CURRENT INTERRUPTER AND LOCKOUT FUNCTION. PROVIDE WEATHER-RESISTANT RECEPTACLES FOR ALL 20A RECEPTACLES INSTALLED IN DAMP AND WET LOCATIONS. PROVIDE SPECIFIC-USE RECEPTACLES WHERE INDICATED ON THE DRAWINGS. UNLESS OTHERWISE NOTED ON THE DRAWINGS, INSTALL RECEPTACLES 48 INCHES ABOVE FINISH FLOOR UNLESS OTHERWISE NOTED DIMENSIONS ARE TO CENTERLINE OF OUTLET.

DEVICE PLATES – PROVIDE UL LISTED, STAINLESS STEEL, HINGED OUTLET COVER/ENCLOSURE WITH GASKET BETWEEN THE ENCLOSURE AND THE MOUNTING SURFACE, SUITABLE FOR WET LOCATION WHILE IN USE FOR ALL OUTLETS ON THE EXTERIOR OF THE BUILDING.

CONDUIT – PROVIDE GALVANIZED RIGID STEEL PER ANSI C80.1, PVC SCHEDULE 80 PER NEMA TC2, OR RTRC FIBERGLASS CONDUIT PER NEMA TC14 FOR ABOVE GROUND CONDUIT SYSTEMS. PROVIDE GALVANIZED RIGID STEEL PER ANSI C80.1, PVC SCHEDULE 40 PER NEMA TC2, OR HDPE SCHEDULE 40 PER NEMA TC7 FOR UNDER GROUND CONDUIT SYSTEMS.

CONDUCTORS – ALL CONDUCTORS SHALL BE COPPER AA-8000 SERIES ALLOY WITH TYPE XHHW-2 INSULATION. MINIMUM BRANCH CIRCUIT CONDUCTOR SIZE SHALL BE 12 AWG. MINIMUM CONTROL CIRCUIT CONDUCTOR SIZE SHALL BE #18 AWG. WIRING IN LIGHTING FIXTURE CHANNELS SHALL BE COPPER WITH TYPE XHHW OR OTHER INSULATION RATED 90 DEGREES C OR HIGHER, 600 VOLT. ALL WIRING OUTSIDE OF HEATED STRUCTURES, BELOW GRADE, IN WET LOCATIONS OR IN AREAS WITH TEMPERATURES BELOW 32° F SHALL HAVE XHHW-2 INSULATION.

INDUSTRIAL/MINING CABLE: UL LISTED TYPE W OR G/GC PER UL 1650 AND NEMA WC-58. CONDUCTOR: ROPE-LAY STRANDED, BUNCHED MEMBERS, ANNEALED COPPER CONDUCTORS. INSULATION: POLYESTER OR PAPER TAPE SEPARATES THE COPPER CONDUCTORS FROM THE EP RUBBER INSULATION. THE INSULATED CONDUCTORS ARE ASSEMBLED ROUND WITH FILLERS AS NEEDED. JACKET/SHEATH: CPE RUBBER JACKET. JACKETS ARE REINFORCED BY A BRAID OR SERVE OF SYNTHETIC MATERIAL.

COMBINATION TRANSFORMER/PANEL – SQUARE D MINI POWER-ZONE #MPZB30T2F25K, OR APPROVED EQUAL. UNIT SHALL HAVE FACTORY INSTALLED PRIMARY AND SECONDARY OVERCURRENT PROTECTION. ALL CIRCUIT BREAKERS SHALL BE BOLT ON, MOLDED CASE WITH THERMAL-MAGNETIC TRIP OPERATION.

DISCONNECT SWITCHES – PROVIDE UL LISTED 600V HEAVY DUTY FUSIBLE OR NON-FUSIBLE (AS INDICATED ON THE DRAWINGS) QUICK-MAKE, QUICK BREAK, LOAD INTERRUPTER, ENCLOSED KNIFE SWITCHES WITH EXTERNALLY OPERABLE HANDLE INTERLOCKED TO PREVENT OPENING FRONT COVER WITH SWITCH IN ON POSITION, HANDLE LOCKABLE IN OFF POSITION, AND FUSE CLIPS DESIGNED TO ACCOMMODATE CLASS R FUSES AND REJECT ALL OTHER CLASS FUSES. ENCLOSURES SHALL BE NEMA 3R STAINLESS STEEL AS INDICATED ON THE DRAWINGS. INSTALL ANSI/UL 198E CLASS RK5 600 VOLT ONE-TIME FUSES, 200,000 RMS AMPERE INTERRUPTING RATED OF SIZE INDICATED ON THE DRAWINGS IN ALL FUSIBLE DISCONNECT SWITCHES.

MOTOR STARTERS – PROVIDE MAGNETIC MOTOR STARTERS: NEMA ICS 2; AC GENERAL-PURPOSE CLASS A MAGNETIC CONTROLLER FOR INDUCTION MOTORS RATED IN HORSEPOWER. FULL VOLTAGE STARTING: NON-REVERSING TYPE. OVERLOAD RELAY SHALL BE THE MELTING ALLOY TYPE. COMBINE MOTOR STARTERS WITH FUSIBLE SWITCH DISCONNECT IN COMMON ENCLOSURE. PROVIDE TWO FIELD CONVERTIBLE CONTACTS IN ADDITION TO SEAL-IN CONTACT. PROVIDE CONTROL POWER TRANSFORMERS AS REQUIRED.

EXTRA MATERIALS – FURNISH EXTRA MATERIALS DESCRIBED BELOW THAT MATCH PRODUCTS INSTALLED AND THAT ARE PACKAGED WITH PROTECTIVE COVERING FOR STORAGE AND IDENTIFIED WITH LABELS DESCRIBING CONTENTS.

1. LAMPS: FURNISH AT LEAST ONE OF EACH TYPE.
2. PLASTIC DIFFUSERS AND LENSES: FURNISH AT LEAST ONE OF EACH TYPE.
3. BALLASTS: FURNISH AT LEAST ONE OF EACH TYPE AND RATING INSTALLED.

662 – 3.02 COORDINATION

THERE ARE UNDERGROUND ELECTRICAL UTILITIES LOCATED ADJACENT TO THE PROJECT. THE LOCATIONS SHOWN ON THE PLANS ARE APPROXIMATE ONLY. REQUEST UTILITY LOCATES FROM ALL THE UTILITIES HAVING FACILITIES IN THE AREA AND FOR CONNECTIONS TO EXISTING UTILITIES AS NOTED ON THE PLANS. CONTACTS FOR EXISTING UTILITIES ARE OUTLINED BELOW:

ALASKA POWER AND TELEPHONE COMPANY (AP&T), GREG MICKELSON (800) 478-7785
INTER-ISLAND FERRY AUTHORITY (IFA), HOLLIS TERMINAL (907) 828-4848

EXISTING ELECTRICAL UTILITIES SHALL REMAIN IN SERVICE DURING CONSTRUCTION UNLESS OTHERWISE AUTHORIZED BY THE AP&T AND IFA. WORK AROUND ALL UTILITY FACILITIES, EITHER EXISTING OR RELOCATED, THROUGHOUT THE PROJECT UNLESS ADVISED BY THE UTILITY THAT THE FACILITY BE ABANDONED IN PLACE.

INCLUDE UTILITY COORDINATION AND RELOCATIONS INTO THE PROGRESS SCHEDULE SET FORTH IN SECTION 108-1.03.

PROVIDE THE UTILITY COMPANIES A MINIMUM OF THIRTY (30) CALENDAR DAYS ADVANCED WRITTEN NOTICE PRIOR TO NEEDING UTILITY LOCATIONS OR TO FACILITATE CONSTRUCTION OF NEW UTILITY WORK. THE UTILITY COMPANY WILL NOT BE REQUIRED TO WORK IN MORE THAN ONE LOCATION AT A TIME AND WILL BE ALLOWED TO COMPLETE A SPECIFIC SECTION OF WORK PRIOR TO COMMENCING ON ANOTHER SECTION.

CONSTRUCTION SURVEYING IS REQUIRED TO "AS-BUILT" THE FINAL UTILITY LOCATION FOR ALL NEW, BURIED UTILITIES. PAYMENT FOR AS-BUILT SURVEYING OF THE FINAL UTILITY LOCATIONS IS CONSIDERED INCLUDED IN PAY ITEM 642(1) CONSTRUCTION SURVEYING.

COORDINATE ELECTRICAL DESIGN AND INSTALLATION OF HYDRAULICS POWER CONTROLS WITH A HYDRAULICS ENGINEER OR TECHNICIAN.

662 – 3.03 CONSTRUCTION REQUIREMENTS

GENERAL REQUIREMENTS – THE CONTRACTOR SHALL EMPLOY CERTIFIED ELECTRICIANS EXPERIENCED IN THE SUCCESSFUL INSTALLATION OF MARINE LIGHTING SYSTEM AND HYDRAULICS POWER CONTROLS. THE CONTRACTOR/SUBCONTRACTOR DOING THE WORK SHALL PROVIDE WRITTEN EVIDENCE THAT THEY HAVE AT LEAST 5 YEARS OF EXPERIENCE IN THE BUSINESS OF INSTALLING LIGHTING SYSTEM AND HYDRAULICS POWER CONTROLS AND SHALL HAVE COMPLETED AT LEAST 3 SUCCESSFUL PROJECTS OF SIMILAR CONSTRUCTION. PROVIDE THE OWNERS NAME AND PHONE NUMBER FOR EACH PROJECT REFERENCED. A PROCEDURAL PLAN AND WORK SCHEDULE FOR INSTALLATION OF THE LIGHTING AND HYDRAULICS POWER CONTROLS SYSTEMS SHALL BE SUBMITTED SEPARATELY FROM THE SCHEDULES REQUIRED UNDER SECTION 108 AND WILL REQUIRE THE APPROVAL OF THE ENGINEER. THE CONTRACTOR SHALL COORDINATE THE WORK SO AS TO NOT INTERFERE WITH SCHEDULED IFA FERRY VESSEL ACTIVITIES. AT LEAST 24 HOURS ADVANCE NOTICE OF IMPENDING WORK SHALL BE PROVIDED TO THE IFA TERMINAL MANAGER. THE CONTRACTOR SHALL STORE POWER, LIGHTING AND HYDRAULICS POWER CONTROLS SYSTEM MATERIALS AT A LOCATION APPROVED BY THE ENGINEER, WHICH SHALL CONSIST OF A DRY HEATED SPACE PRIOR TO INSTALLATION. PROTECT EQUIPMENT FROM FREEZING. LIGHT POLES MAY BE STORED OUTSIDE, BUT PROTECTED FROM THE WEATHER AND DIRT, DEBRIS, ETC. FINAL AS-BUILTS OF THE LIGHTING AND HYDRAULICS POWER CONTROLS SYSTEMS SHALL BE COMPLETED BY THE CONTRACTOR, AND FILED, UPON APPROVAL, WITH THE ENGINEER.

REMOVAL/INSTALLATION – THE CONTRACTOR SHALL NOT REMOVE THE EXISTING LIGHTING SYSTEM AND HYDRAULICS POWER CONTROLS UNTIL THE PROPOSED LIGHTING SYSTEM AND HYDRAULICS POWER CONTROLS EQUIPMENT IS ON-SITE AND SCHEDULED TO BE INSTALLED. MAKE ADEQUATE TERMINAL CONNECTIONS PLACED AT THE SPLICES TO PROTECT EXISTING WIRING UPSTREAM OF THE PROPOSED POWER AND LIGHTING SYSTEM CIRCUIT. STORE SALVAGED MATERIALS IN A SAFE, DRY PLACE. THE CONTRACTOR SHALL BE RESPONSIBLE TO PROTECT EXISTING TERMINAL FACILITIES. ANY EQUIPMENT DAMAGED BY NEGLIGENCE OR IMPROPER HANDLING WILL BE REPLACED AT THE CONTRACTOR'S EXPENSE.

DEMOLITION DRAWINGS ARE BASED ON CASUAL FIELD OBSERVATION AND EXISTING RECORD DRAWING. REPORT DISCREPANCIES TO OWNER BEFORE DISTURBING THE EXISTING INSTALLATION. PROVIDE TEMPORARY WIRING AND CONNECTIONS TO MAINTAIN ALL EXISTING ELECTRICAL SYSTEMS (LIGHTING, ELECTRICAL SERVICE, ETC.) IN SERVICE DURING CONSTRUCTION. DISABLE SYSTEMS ONLY TO MAKE SWITCHOVERS AND CONNECTIONS. OBTAIN PERMISSION FROM OWNER AT LEAST 24 HOURS BEFORE PARTIALLY OR COMPLETELY DISABLING SYSTEM. MINIMIZE OUTAGE DURATION AND MAKE TEMPORARY CONNECTIONS TO MAINTAIN SERVICE IN AREAS ADJACENT TO WORK AREA. WHEN WORK MUST BE PERFORMED ON ENERGIZED EQUIPMENT OR CIRCUITS, USE PERSONNEL EXPERIENCED IN SUCH OPERATIONS. REMOVE, RELOCATE AND EXTEND EXISTING INSTALLATIONS TO ACCOMMODATE NEW CONSTRUCTION. DISCONNECT AND REMOVE ABANDONED DISTRIBUTION EQUIPMENT.

THE INSTALLATION OF THE NEW LIGHTING SYSTEM AND HYDRAULICS POWER CONTROLS SHALL COMPLY WITH ALL CURRENT FEDERAL AND LOCAL LAWS APPLYING TO ELECTRICAL INSTALLATIONS AND WITH THE REGULATIONS OF THE NATIONAL ELECTRIC CODE. PROPOSED LIGHT POLES SHALL BE ERECTED WITH WEB FABRIC SLINGS TO PROTECT PAINTED SURFACES. PROPER PRECAUTIONS SHALL BE TAKEN WHEN HANDLING AND STORING LIGHT POLES. LIGHT POLES SHALL BE PLUMBED, BY MAKING FINAL ADJUSTMENTS TO ANCHOR BOLT NUTS, AND CORRECTLY ALIGNED AFTER RE-INSTALLING.

BEFORE ACCEPTANCE OF THE WORK, PERFORM THE FOLLOWING TESTS ON ALL ELECTRICAL SYSTEMS UNDER THIS SECTION IN THE PRESENCE OF THE ENGINEER. FURNISH THE NECESSARY EQUIPMENT NEEDED TO PERFORM THESE TESTS. THE DEPARTMENT RESERVES THE RIGHT TO RETEST, AND THE TEST RESULTS WILL GOVERN THE ACCEPTANCE OR REJECTION OF THE INSTALLATION. REPLACE OR REPAIR AT YOUR EXPENSE, AND IN AN APPROVED MANNER, ANY FAULTS IN MATERIAL OR ANY PART OF THE INSTALLATION REVEALED BY THESE TESTS. REPEAT THE SAME TEST UNTIL NO FAULT APPEARS.

A. CONTINUITY. TEST EACH CIRCUIT FOR CONTINUITY.
B. GROUNDS. TEST FOR GROUNDS IN EACH CIRCUIT BY PHYSICALLY EXAMINING THE INSTALLATION TO ENSURE THAT ALL REQUIRED GROUNDING CONNECTIONS HAVE BEEN INSTALLED AND ARE MECHANICALLY FIRM.
C. INSULATION RESISTANCE TEST. PERFORM A MEGOHM TEST ON EACH CIRCUIT, BETWEEN CIRCUITS, AND BETWEEN THE CIRCUIT AND A GROUND. DOCUMENT THESE TESTS IN WRITING, FOR EACH CIRCUIT, AND SUBMIT TO THE ENGINEER PRIOR TO ACCEPTANCE OF THE SYSTEM.
D. CIRCUIT. ENERGIZE EVERY INDIVIDUAL LIGHT CIRCUIT WITH LAMPS INSTALLED BEFORE INSTALLING THE LOAD SWITCHES.

Record Drawings have been reviewed by the Project Engineer, and represent to the best of my knowledge, the project as constructed.
PE _____ Date 12/10/15

STATE OF ALASKA
TIMOTHY E. HALL
12-911
12/10/14
REGISTERED PROFESSIONAL ENGINEER

RSA Engineering, Inc.
MECHANICAL AND ELECTRICAL CONSULTING ENGINEERS
670 West Fireweed Lane, Suite 200
Anchorage, AK 99503
Phone (907) 278-2521
Fax (907) 278-1751
191 East Swanson Ave.
Wasilla, AK 99654
Phone (907) 357-1521
Fax (907) 357-1751

CLARK BAY FERRY
TERMINAL IMPROVEMENTS
HOLLIS, ALASKA

REVISIONS:

DRAWN BY: MJC
CHECKED BY: DKB/TEH
DATE: 12/10/2014
JOB NUMBER: L4188.00
DWG FILE: L4188_ESERIES

DRAWING TITLE:
ELECTRICAL SPECIFICATIONS

SHEET:
E0.3

SECTION 662 ELECTRICAL POWER AND LIGHITNG SYSTEMS CONTINUED

E. FUNCTIONAL. PERFORM THE FOLLOWING TESTS ON THE POWER AND LIGHTING SYSTEM AFTER ALL OF THE COMPONENT CIRCUITS HAVE SATISFACTORILY PASSED THE TESTS FOR CONTINUITY, GROUNDING, INSULATION INTEGRITY AND CIRCUITRY.

(1) POWER: PERFORM THE FUNCTIONAL TEST FOR THE NEW POWER SUPPLY TO THE RAMP/APRON BY RUNNING THROUGH THE FULL RANGE OF MOTION 3 SUCCESSIVE TIMES, TWICE PER DAY, FOR NO LESS THAN 2 DAYS OF SATISFACTORY OPERATION.

IF THE SYSTEM PERFORMS UNSATISFACTORILY, CORRECT THE CONDITION AND REPEAT THE TEST UNTIL THE SYSTEM RUNS FOR 2 DAYS WITH CONTINUOUS SATISFACTORY OPERATION.

DO NOT START FUNCTIONAL TESTS ON A FRIDAY, SATURDAY, SUNDAY, A LEGAL HOLIDAY, OR THE DAY BEFORE THE LEGAL HOLIDAY.

(2) LIGHTING: PERFORM THE FUNCTIONAL TEST FOR THE NEW LIGHTING SYSTEM BY RUNNING NO LESS THAN 5 DAYS OF CONTINUOUS, SATISFACTORY OPERATION.

IF THE SYSTEM PERFORMS UNSATISFACTORILY, CORRECT THE CONDITION AND REPEAT THE TEST UNTIL THE SYSTEM RUNS FOR 5 DAYS WITH CONTINUOUS SATISFACTORY OPERATION.

DO NOT START FUNCTIONAL TESTS ON A FRIDAY, SATURDAY, SUNDAY, A LEGAL HOLIDAY, OR THE DAY BEFORE THE LEGAL HOLIDAY.

INITIALLY TURN ON THE SYSTEM BETWEEN 9:00 A.M. AND 2:00 P.M. BEFORE TURNING IT ON, ENSURE ALL EQUIPMENT IS INSTALLED AND OPERABLE. A SHUT DOWN OF THE ELECTRICAL SYSTEM DUE TO A POWER INTERRUPTION DOES NOT CONSTITUTE DISCONTINUITY OF THE FUNCTIONAL TEST IF THE SYSTEM IS FUNCTIONAL WHEN THE POWER IS RETURNED.

WARRANTY – THE CONTRACTOR SHALL GUARANTEE ALL WORK EXECUTED UNDER THIS CONTRACT TO BE FREE FROM DEFECTS IN MATERIALS AND WORKMANSHIP FOR A PERIOD OF ONE YEAR FROM BENEFICIAL OCCUPANCY. ANY FAULTY MATERIALS OR WORKMANSHIP SHALL BE REPAIRED OR REPLACED TO THE SATISFACTION OF THE OWNER DURING THE GUARANTEE PERIOD.

PERMITS – SECURE AND PAY FOR ALL FEES, PERMITS, ETC. REQUIRED BY LOCAL AND STATE AGENCIES AND ALL LOCAL UTILITY COMPANIES.

REFERENCE SYMBOLS – THE ELECTRICAL "LEGEND" ON THE DRAWINGS IS A STANDARDIZED VERSION, AND ALL SYMBOLS SHOWN MAY NOT BE USED. USE THE "LEGEND" AS A REFERENCE FOR THE SYMBOLS USED ON THE DRAWINGS.

ELECTRICAL DEMOLITION – DISCONNECT AND REMOVE ELECTRICAL DEVICES AND EQUIPMENT SERVING UTILIZATION EQUIPMENT THAT HAS BEEN REMOVED. REMOVE BRACKETS, STEMS, HANGERS AND OTHER ACCESSORIES. MAINTAIN ACCESS TO EXISTING ELECTRICAL INSTALLATIONS WHICH REMAIN ACTIVE.

IDENTIFICATION – PROVIDE ENGRAVED THREE-LAYER LAMINATED PLASTIC NAMEPLATES WITH WHITE LETTERS ON A BLACK BACKGROUND TO IDENTIFY ALL ELECTRICAL DISTRIBUTION, CONTROL EQUIPMENT, LOADS SERVED, AND LOW-VOLTAGE SYSTEM PANELS. LETTER HEIGHTS SHALL BE 1/4-INCH HIGH LETTERS FOR IDENTIFYING INDIVIDUAL PANEL OR EQUIPMENT, 1/8-INCH HIGH LETTERS FOR REMAINING LINES, WITH 1/8 INCH SPACING BETWEEN LINES. NAMEPLATES SHALL SHOW PANEL OR EQUIPMENT NAME; SOURCE WHERE PANEL OR EQUIPMENT IS FED FROM; VOLTAGE, PHASE, AND WIRE CONFIGURATION, AND AIC RATING (FOR PANELS ONLY). SECURE NAMEPLATES TO EQUIPMENT FRONTS USING SCREWS, OR RIVETS. THE USE OF ADHESIVES IS NOT ACCEPTABLE. SECURE NAMEPLATE TO INSIDE FACE OF RECESSED PANELBOARD DOORS IN FINISHED LOCATIONS.

CONDUIT – INSTALL AN INSULATED EQUIPMENT GROUNDING CONDUCTOR IN ALL RACEWAYS. UTILIZE GALVANIZED RIGID STEEL FOR EXPOSED FEEDERS IN WET LOCATIONS, SCHEDULE 40 PVC MAY BE USED. COMPLETELY AND THOROUGHLY SWAB RACEWAY SYSTEM BEFORE INSTALLING CONDUCTORS OR CABLES. PULL ALL CONDUCTORS INTO THE RACEWAY AT THE SAME TIME. USE UL LISTED WIRE PULLING LUBRICANT FOR PULLING 4 AWG AND LARGER WIRES. COLOR CODE CONDUCTORS AS FOLLOWS: 277/480 AND 120/208 VOLT SYSTEMS. USE PROPERLY SIZED INSULATED SPRING WIRE CONNECTORS WITH PLASTIC CAPS FOR ALL CONDUCTORS #8 AWG AND SMALLER. TERMINATE #6 AWG AND LARGER CONDUCTORS WITH CRIMP OR COMPRESSION TYPE CONNECTORS INSTALLED WITH TOOL RECOMMENDED BY CONNECTION MANUFACTURER AND INSULATE WITH PROPERLY SIZED 600 VOLT RATED HEAT SHRINK TUBING.

SECONDARY GROUNDING – GROUND EACH SEPARATELY-DERIVED SYSTEM NEUTRAL TO COMMON GROUNDING ELECTRODE CONDUCTOR. BOND TOGETHER SYSTEM NEUTRALS, SERVICE EQUIPMENT ENCLOSURES, EXPOSED NON-CURRENT CARRYING METAL PARTS OF ELECTRICAL EQUIPMENT, METAL RACEWAY SYSTEMS, GROUNDING CONDUCTOR IN RACEWAYS AND CABLES, RECEPTACLE GROUND CONNECTORS. PROVIDE A SEPARATE, INSULATED EQUIPMENT GROUNDING CONDUCTOR IN ALL CONDUITS AND CABLES. TERMINATE EACH END ON A GROUNDING LUG, BUS, OR BUSHING. FERRY EQUIPMENT GROUNDING SHOULD BE PER NEC 555 NFPA 303. FERRY EQUIPMENT GROUNDING SHOULD BE PER NEC 555 NFPA 303. MEASURE GROUND RESISTANCE FROM SYSTEM NEUTRAL CONNECTION AT SERVICE ENTRANCE TO CONVENIENT GROUND REFERENCE POINT USING SUITABLE GROUND TESTING EQUIPMENT. RESISTANCE SHALL NOT EXCEED 10 OHMS.

EQUIPMENT CONNECTIONS – PROVIDE WIRING AND CONNECTION OF EQUIPMENT REQUIRING ELECTRICAL POWER BUT SPECIFIED UNDER OTHER DIVISIONS OF THE SPECIFICATIONS. EQUIPMENT SHALL INCLUDE BUT IS NOT LIMITED TO MOTORS ETC. REVIEW EQUIPMENT SUBMITTALS PRIOR TO INSTALLATION AND ELECTRICAL ROUGH-IN. VERIFY LOCATION, SIZE, TYPE OF CONNECTIONS, AND THAT EQUIPMENT IS READY FOR ELECTRICAL CONNECTION. MAKE WIRING CONNECTIONS IN CONTROL PANEL OR IN WIRING COMPARTMENT OF PREWIRED EQUIPMENT IN ACCORDANCE WITH THE MANUFACTURER'S INSTRUCTIONS. PROVIDE INTERCONNECTING WIRING AND DISCONNECTS WHERE REQUIRED.

TRANSFORMERS – GROUND TRANSFORMER CORE AND COIL ASSEMBLY TO ENCLOSURE BY MEANS OF A VISIBLE FLEXIBLE COPPER GROUNDING STRAP. TRANSFORMER SHALL BE SUITABLE FOR FLOOR MOUNTING. COIL CONDUCTORS SHALL BE CONTINUOUS WINDING WITH TERMINATIONS BRAZED OR WELDED. ENCLOSURE SHALL MEET ANSI/NEMA ST DEGREES C RISE ABOVE AMBIENT AT ITS WARMEST POINT. WINDING TAPS AND SOUND SHALL MEET ANSI/NEMA ST 20. ISOLATE CORE AND COIL FROM ENCLOSURE USING VIBRATION ABSORBING MOUNTS. PROVIDE NAMEPLATE INDICATING TRANSFORMER CONNECTION DATA. CHECK FOR DAMAGE AND TIGHT CONNECTIONS PRIOR TO ENERGIZING TRANSFORMER. MEASURE PRIMARY AND SECONDARY VOLTAGES AND MAKE APPROPRIATE TAP ADJUSTMENTS. PROVIDE SQUARE 'D' MINI-POWER ZONE OR APPROVED EQUAL AS SHOWN ON DRAWINGS.

ARC-FLASH SIGNAGE – ALL , MOTOR STARTERS, PANELBOARDS AND FUSED DISCONNECTS SHALL HAVE SIGNAGE FOR ARC HAZARD INSTALLED. THE MARKING SHALL BE LOCATED TO BE CLEARLY VISIBLE TO QUALIFIED PERSONNEL BEFORE EXAMINATION, ADJUSTMENT, SERVICING OR MAINTENANCE OF THE EQUIPMENT. AT A MINIMUM THE 3-LINE SIGNAGE SHALL STATE THE FOLLOWING: WARNING – ARC FLASH AND SHOCK HAZARD – APPROPRIATE PPE REQUIRED.

PANELBOARDS – INSTALL PANELBOARDS PLUMB WITH TOP OF CABINET 6'-6" ABOVE FINISHED FLOOR UNLESS OTHERWISE NOTED ON THE DRAWINGS. PROVIDE TYPED CIRCUIT DIRECTORIES FOR EACH PANELBOARD. MEASURE STEADY STATE LOAD CURRENTS OF EACH PANELBOARD FEEDER AND REARRANGE BRANCH CIRCUITS AS REQUIRED TO MAINTAIN A MAXIMUM 20 PERCENT DIFFERENCE BETWEEN PHASES. REVISE CIRCUIT DIRECTORY TO REFLECT CIRCUITING CHANGES REQUIRED TO BALANCE PHASE LOADS.

MOTOR CONTROLS – INSTALL MOTOR CONTROL EQUIPMENT IN ACCORDANCE WITH MANUFACTURER'S INSTRUCTIONS. INSTALL FUSES IN FUSIBLE SWITCHES. SELECT AND INSTALL HEATER ELEMENTS IN MOTOR STARTERS TO MATCH INSTALLED MOTOR CHARACTERISTICS. MOTOR DATA: PROVIDE NEATLY TYPED LABEL INSIDE EACH MOTOR STARTER ENCLOSURE DOOR IDENTIFYING MOTOR SERVED, NAMEPLATE HORSEPOWER, FULL LOAD AMPERES, CODE LETTER, SERVICE FACTOR, AND VOLTAGE/PHASE RATING.

Record Drawings have been reviewed by the Project Engineer, and represent to the best of my knowledge, the project as constructed.

PE _____ Date 12/10/15

STATE OF ALASKA 49TH TIMOTHE C. HALL 12-9171 12/10/14 REGISTERED PROFESSIONAL ENGINEER

RSA Engineering, Inc.
MECHANICAL AND ELECTRICAL CONSULTING ENGINEERS
670 West Fireweed Lane, Suite 200 Anchorage, AK 99503 Phone (907) 276-0521 Fax (907) 276-1751
191 East Swanson Ave. Wasilla, AK 99654 Phone (907) 357-1521 Fax (907) 357-1751

CLARK BAY FERRY TERMINAL IMPROVEMENTS
HOLLIS, ALASKA

REVISIONS:

DRAWN BY:	MJC
CHECKED BY:	DKB/TEH
DATE:	12/10/2014
JOB NUMBER:	L4189.00
DWG FILE:	L4189_ESERIES

DRAWING TITLE: ELECTRICAL SPECIFICATIONS

SHEET: E0.4

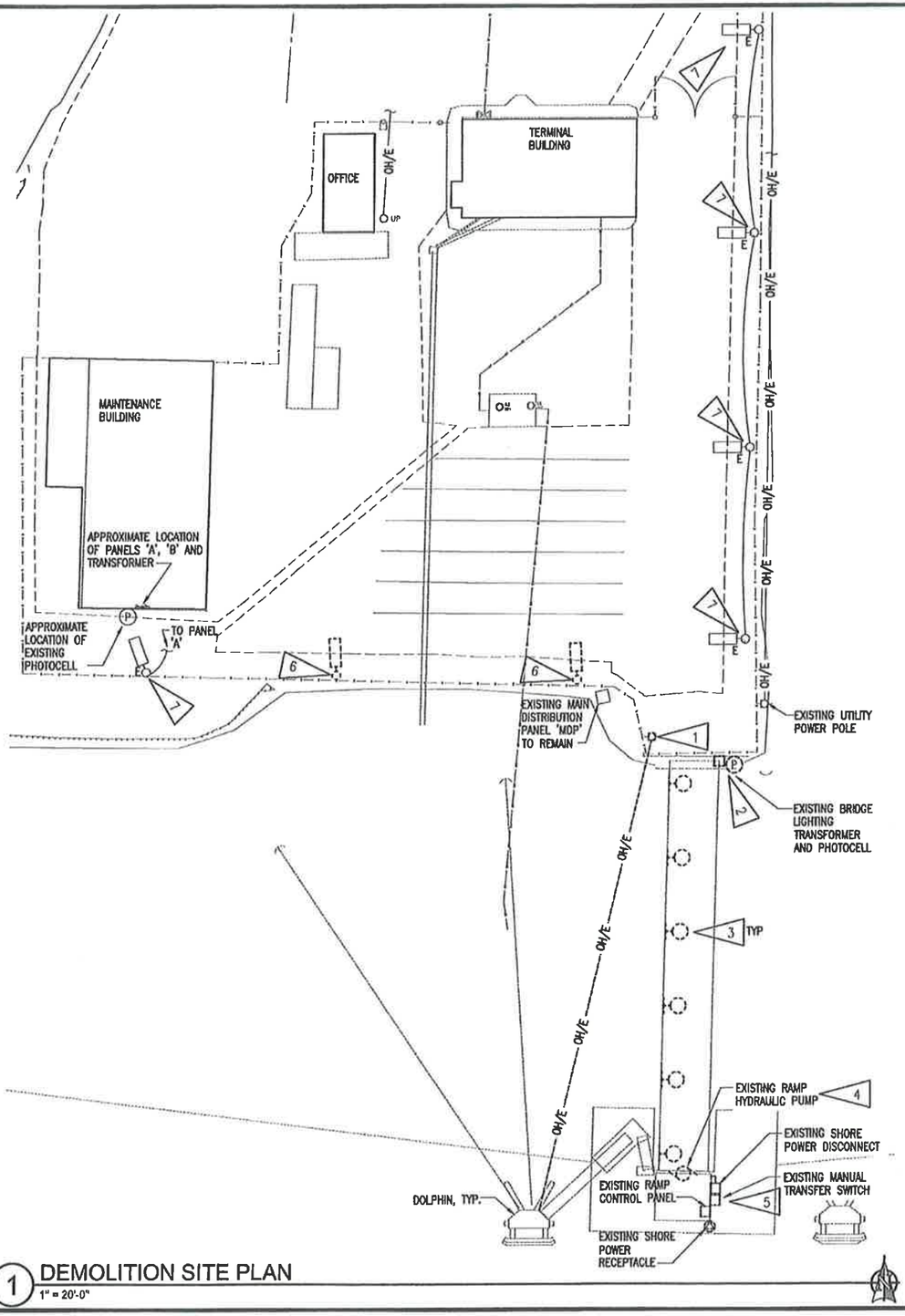

1 DEMOLITION SITE PLAN
1" = 20'-0"

GENERAL NOTES:

A. THE INFORMATION SHOWN ON THIS DRAWING IS TAKEN FROM AS-BUILT DRAWINGS AND A NON-DESTRUCTIVE WALK THROUGH OF THE FACILITY. THERE IS NO WARRANTY OR GUARANTEE AS TO THE ACCURACY OF THE INFORMATION SHOWN HERE-IN. THE CONTRACTOR SHALL FIELD VERIFY ALL ITEMS SCHEDULED FOR DEMOLITION PRIOR TO START OF WORK.

B. THE OWNER SHALL HAVE FIRST RIGHT OF REFUSAL ON ALL SALVAGEABLE MATERIALS. THE CONTRACTOR SHALL DELIVER SALVAGED MATERIALS TO A WAREHOUSE AS DIRECTED BY THE OWNER. THE CONTRACTOR SHALL DISPOSE OF, OFF SITE, ALL UNWANTED MATERIALS.

C. DASHED OR DOTTED LINES INDICATE ITEMS TO BE REMOVED. SOLID LINES INDICATE EXISTING ITEMS TO REMAIN.

SHEET NOTES:

1. AT THE END OF PROJECT, DEMOLISH LIGHT POLE, LIGHT UP ON DOLPHIN AND CONDUIT AND CONDUCTORS BACK TO SOURCE.
2. DEMOLISH EXISTING BRIDGE LIGHTING TRANSFORMER, PHOTOCELL AND CONDUITS AND CONDUCTORS BACK TO SOURCE.
3. DEMOLISH EXISTING BRIDGE LIGHT, CONDUIT AND CONDUCTORS BACK TO SOURCE.
4. DEMOLISH EXISTING RAMP HYDRAULIC PUMP, CONDUIT AND CONDUCTORS BACK TO SOURCE.
5. DEMOLISH EXISTING SHORE POWER DISCONNECT, MANUAL TRANSFER SWITCH, RAMP CONTROL PANEL, SHORE POWER RECEPTACLE AND ALL CONDUITS AND CONDUCTORS BACK TO SOURCE.
6. DEMOLISH EXISTING LIGHT AND POLE BASE. RETAIN EXISTING LIGHTS FOR RELOCATION. DEMOLISH CONDUIT AND CONDUCTORS TO 24" BELOW GRADE AND ABANDON IN PLACE. SEE E2.1 FOR RELOCATION OF EXISTING RAMP SITE LIGHTS.
7. EXISTING AREA LIGHTS TO REMAIN. SALVAGE EXISTING CONDUIT AS REQUIRED TO REFEED CIRCUIT. SEE E2.1.

Record Drawings have been reviewed by the Project Engineer, and represent to the best of my knowledge, the project as constructed.

PE _____ Date 12/16/15

STATE OF ALASKA — TIMOTHY E. HALL — 12-913 — 12/10/14 — REGISTERED PROFESSIONAL ENGINEER

RSA Engineering, Inc.
MECHANICAL AND ELECTRICAL CONSULTING ENGINEERS
670 West Fireweed Lane, Suite 200, Anchorage, AK 99503
Phone (907) 278-0521 Fax (907) 278-1751
191 East Swanson Ave, Wasilla, AK 99654
Phone (907) 357-1521 Fax (907) 357-1751

CLARK BAY FERRY
TERMINAL IMPROVEMENTS
HOLLIS, ALASKA

REVISIONS:

DRAWN BY:	MJC
CHECKED BY:	DKB/TEH
DATE:	12/10/2014
JOB NUMBER:	L4169.00
DWG FILE:	L4169_E0SERIES

DRAWING TITLE: DEMOLITION SITE PLAN

SHEET: E1.1

SHEET NOTES:

1. MINI-POWER ZONE 'MPZ' AND LIGHTING CONTACTOR. ROUTE LIGHTING MPZ CIRCUITS, VIA LIGHTING CONTACTOR. SEE 2/E2.1 LIGHTING CONTACTOR DETAIL.
2. ~~SEE 3/E2.1 LIGHT POLE BASE DETAIL.~~
3. EXTEND CIRCUIT AND RECONNECT EXISTING AREA LIGHTS ON EAST SIDE OF SITE.

PARKING LOT LIGHTS, POLES AND FOUNDATIONS DELETED

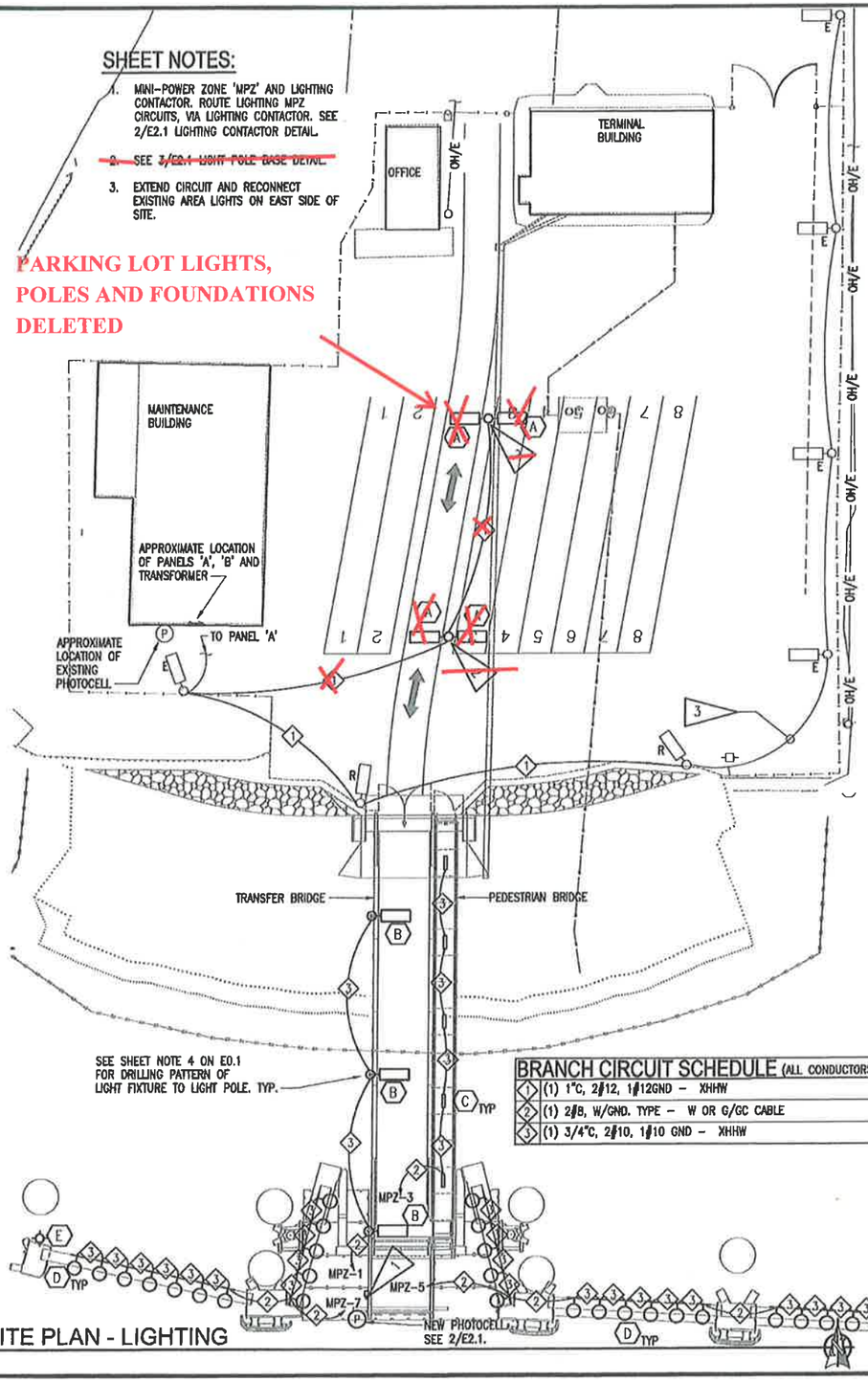

BRANCH CIRCUIT SCHEDULE (ALL CONDUCTORS SHALL BE COPPER)

1	(1) 1"C, 2#12, 1#12GND – XHHW
2	(1) 2#8, W/GND. TYPE – W OR G/GC CABLE
3	(1) 3/4"C, 2#10, 1#10 GND – XHHW

1 REMODEL SITE PLAN - LIGHTING
1" = 20'-0"

DETAIL NOTES:

1. ALL STRUCTURAL STEEL SHALL BE ASTM A36.
2. ALL WELDING SHALL BE PERFORMED IN ACCORDANCE WITH AMERICAN WELDING SOCIETY D1.1–86.
3. VERIFY ALL UTILITY LOCATIONS AND OBTAIN CLEARANCE FROM OWNER'S REPRESENTATIVE PRIOR TO INSTALLATION OF PILES.

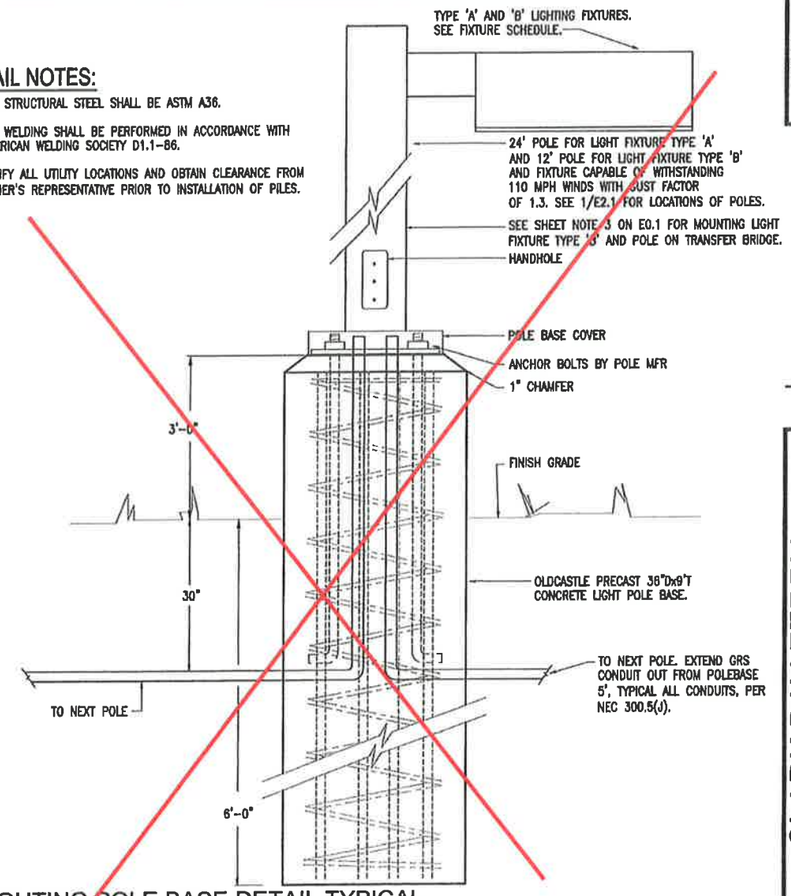

3 LIGHTING POLE BASE DETAIL TYPICAL
NOT TO SCALE

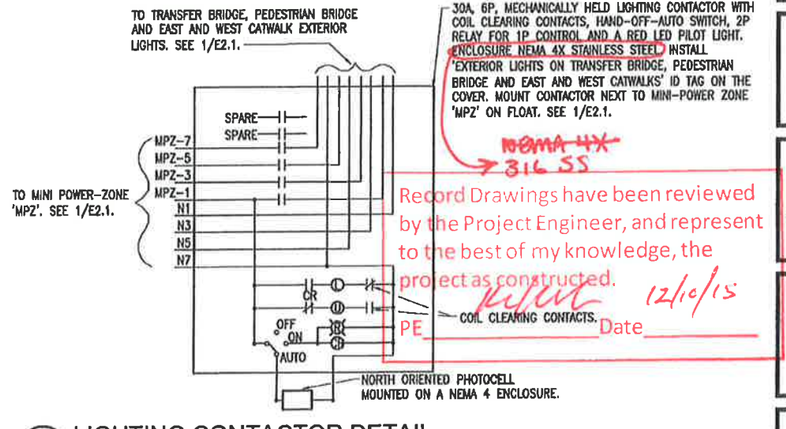

2 LIGHTING CONTACTOR DETAIL
NOT TO SCALE

Record Drawings have been reviewed by the Project Engineer, and represent to the best of my knowledge, the project as constructed.
PE _____ Date 12/10/15

STATE OF ALASKA — TIMOTHY E. HILL — EE-9111 — 12/10/14 — REGISTERED PROFESSIONAL ENGINEER

RSA Engineering, Inc.
MECHANICAL AND ELECTRICAL CONSULTING ENGINEERS
670 West Fireweed Lane, Suite 200 Anchorage, AK 99503 Phone (907) 276-0521 Fax (907) 279-1791
191 East Swanson Ave. Wasilla, AK 99654 Phone (907) 357-1521 Fax (907) 357-1791

CLARK BAY FERRY
TERMINAL IMPROVEMENTS
HOLLIS, ALASKA

REVISIONS:

DRAWN BY:	MJC
CHECKED BY:	DKB/TEH
DATE:	12/10/2014
JOB NUMBER:	L4189.00
DWG FILE:	L4189_E0E1E2

DRAWING TITLE: REMODEL SITE PLAN - LIGHTING

SHEET: E2.1

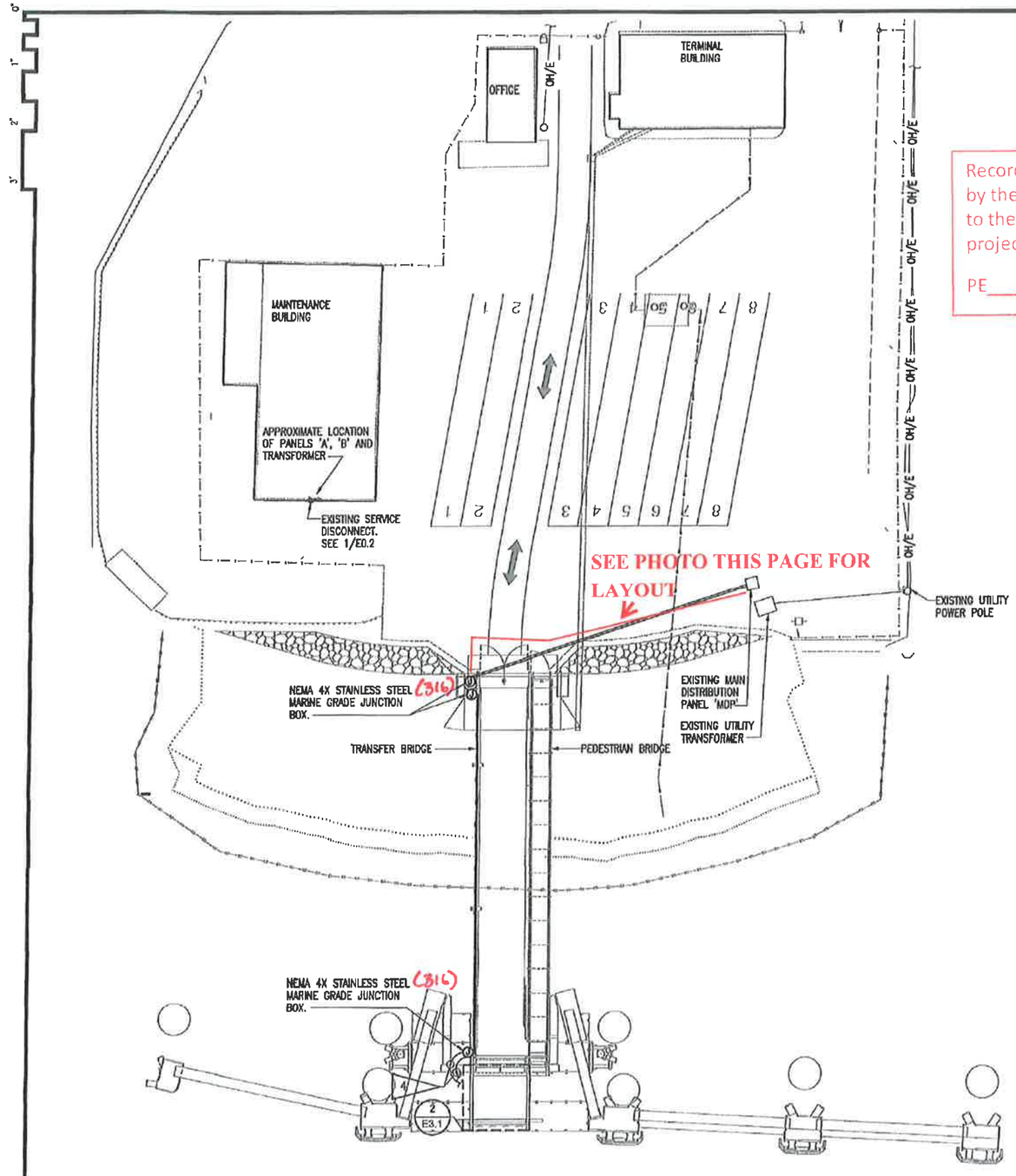

1 REMODEL SITE PLAN - POWER
1" = 20'-0"

Record Drawings have been reviewed by the Project Engineer, and represent to the best of my knowledge, the project as constructed.

PE [signature] Date 12/10/15

SHEET NOTES:

1. SEE 1/E3.1 FOR CONTINUATION OF ELECTRICAL CIRCUIT.
2. APPROXIMATE LOCATION OF LOCK PIN ACTUATORS WITH 2 LIMIT SWITCHES. PROVIDE EACH LIMIT SWITCH WITH 2#12, 1#12 GND. CONNECT CONDUCTORS TO LIMIT SWITCHES PER MANUFACTURE'S INSTRUCTIONS. COORDINATE EXACT LOCATION OF LOCK PIN ACTUATORS AND LIMIT SWITCHES PRIOR TO ROUGH-IN.
3. SEE 1/E0.2 POWER ONE-LINE FOR ALL POWER CIRCUIT FEEDER SIZES TO EQUIPMENT SHOWN IN SCHEDULE.
4. SEE 2/E3.1 FOR CONTINUATION OF ELECTRICAL CIRCUIT.



EQUIPMENT ID SCHEDULE

EQUIPMENT ID	DESCRIPTION
1	MANUAL TRANSFER SWITCH
2	200A SHORE POWER DISCONNECT
3	SHORE TO SHIP POWER RECEPTACLE
4	60A FUSED DISCONNECT
5	SHIP TO SHORE POWER RECEPTACLE
6	MINI-POWER ZONE 'MPZ'
7	HYDRAULIC CONTROL PANEL
8	HYDRAULIC POWER UNIT PANEL
9	HYDRAULIC PUMP, 15HP, 480V, 3ø

BRANCH CIRCUIT SCHEDULE (ALL CONDUCTORS SHALL BE COPPER)

1	(1) 0.5"C, 2#12, 1#12 GND - XHHW
2	(1) 1.5"C, 12#12 - XHHW

SEE PHOTO, PAGE E4.1, FOR FINAL LAYOUT
ALL ELECTRICAL GEAR INSTALLED
ON EAST SIDE

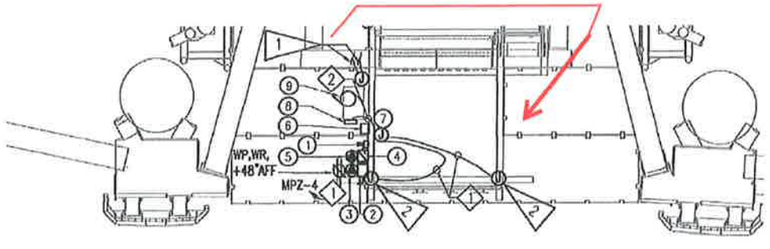

2 ENLARGED REMODEL SITE PLAN - POWER
1" = 10'-0"

STATE OF ALASKA
49TH
TIMOTHY E. HALL
IE-9131
12/10/14
REGISTERED PROFESSIONAL ENGINEER

RSA Engineering, Inc.
MECHANICAL AND ELECTRICAL CONSULTING ENGINEERS
670 West Fireweed Lane, Suite 200 Anchorage, AK 99503 Phone (907) 276-0521 Fax (907) 276-1751
191 East Smazzon Ave. Wasilla, AK 99654 Phone (907) 357-1521 Fax (907) 357-1751

CLARK BAY FERRY TERMINAL IMPROVEMENTS
HOLLIS, ALASKA

REVISIONS:

DRAWN BY: MJC
CHECKED BY: DXB/TEH
DATE: 12/10/2014
JOB NUMBER: L4189.00
DWG FILE: L4189_ESERIES

DRAWING TITLE:
REMODEL SITE PLAN - POWER

SHEET:
E3.1

200/3 SPARE INSTALLED

SHIP TO SHORE LABEL IS ACTUALLY SHORE TO SHIP.

EXISTING MAIN DISTRIBUTION PANEL 'MDP'

MFR/MODEL: SQUARE 'D' I-LINE HCM SERIES | VOLTS: 277/480V,3PH,4W | ENCLOSURE: NEMA 3R | 600 A | MTG: SURFACE

NOTE	POLE	AMPS	SERVICE	TYPE	A	B	C	TYPE	SERVICE	AMPS	POLE	CIRC	NOTE
	3	40	(E) SPARE						SPACE	-	1	2	
	3	40	^^^						(E) SPARE	20	1	4	
	3	40	^^^						(E) SPARE	20	1	6	
	3	250	(E) SHOP (PANEL 'A')		27713			SPEC	SHIP TO SHORE RECP 125 ~~200~~	3	8	a,b
	3	250	^^^			27713		SPEC	^^^ 125 ~~200~~	3	10	
	3	250	^^^				27713	SPEC	^^^ 125 ~~200~~	3	12	
b,c	3	~~225~~	(E)MINI PWR ZONE HYD PMP	FEDR	7650				SPACE	-	3	14	
	3	~~225~~	^^^	FEDR		6300			^^^		3	16	
	3	~~125~~	^^^	FEDR			7520		^^^		3	18	
			TOTAL V-A		35363	34013	35233			104,609 VA			
			TOTAL AMPS		126	123	127			126 A			

100/3

AVAILABLE FAULT CURRENT: A | AIC RATING:

	LTG	REC	MOTR	LG MTR	MISC	KIT	HEAT	SPEC	TOTAL	AMPS
CONNECTED LOAD IN KVA (THIS PANEL):	0.00	0.00	0.00	0.00	0.00	0.00	0.00	83.14	83.1 KVA	100 A
CONNECTED LOAD IN KVA (BRANCH PNLS):	7.19	0.18	17.46	4.37	0.00	0.00	0.00	0.00	24.8 KVA	35 A
TOTAL CONNECTED LOAD IN KVA:	7.19	0.18	17.46	4.37	0.00	0.00	0.00	83.14	108.0 KVA	130 A
DEMAND LOAD IN KVA:	6.99	0.18	17.46	4.37	0.00	0.00	0.00	83.14	114.1 KVA	137 A

PANEL NOTES:
a PROVIDE NEW CIRCUIT BREAKER IN AVAILABLE SPACE.
b APPROXIMATE LOAD ADDED TO 'MDP'.
c EXISTING CIRCUIT BREAKER WITH NEW LOAD.
d

PANEL OPTIONS:
MAIN CIRCUIT BREAKER
(SEE ONE-LINE FOR SIZE)

MINI-POWER ZONE 'MPZ'

MFR/MODEL: SQUARE 'D' MINI POWER ZONE | VOLTS: 120/208V,3PH,4W | ENCLOSURE: ~~NEMA 3R~~ NEMA 4X 316 SS | 100 A | MTG: SURFACE

NOTE	CIRC	POLE	AMPS	SERVICE	TYPE	A	B	C	TYPE	SERVICE	AMPS	POLE	CIRC	NOTE
	1	1	20	LTG TRANSFER BRIDGE	LTG	630				SPARE	20	1	2	
	3	1	20	LTG PEDESTRIAN BRIDGE	LTG		300	180	RECP	MAINTENANCE GFCIRECP	20	1	4	
	5	1	20	LTG EAST CATWALK GANGWAY	LTG			1,700		SPARE	20	1	6	
	7	1	20	LTG WEST CATWALK, GANGWA	LTG	1,200				SPARE	20	1	8	
	9	1	20	SPARE						SPARE	20	1	10	
	11	1	20	SPARE						SPACE	-	1	12	
	13	1	20	SPARE						SPACE	-	1	14	
	15	1	20	SPARE						SPACE	-	1	16	
	17	1	-	SPACE						SPACE	-	1	16	
	19	1	-	SPACE						SPACE	-	1	20	
	21	1	-	SPACE						SPACE	-	1	22	
	23	1	-	SPACE						SPACE	-	1	24	
				TOTAL V-A		1,830	480	1,700			4,010 VA			
				TOTAL AMPS		15	4	14			11 A			

A.I.C. RATING: 10,000

	LTG	REC	MOTR	LG MTR	MISC	KIT	HEAT	SPEC	TOTAL	AMPS
TOTAL CONNECTED LOAD IN KVA:	3.83	0.18	0.00	0.00	0.00	0.00	0.00	0.00	4.0 KVA	11 A
DEMAND LOAD IN KVA:	4.79	0.18	0.00	0.00	0.00	0.00	0.00	0.00	5.0 KVA	14 A

PANEL NOTES:
a
b
c
d
e

PANEL OPTIONS:

↳ thermostatic heater req'd per 662-2.01

EXISTING PANEL 'A'

MFR/MODEL: SQUARE 'D' TYPE NF | VOLTS: 277/480V,3PH,4W | ENCLOSURE: NEMA 1 | 125 A | MTG: SURFACE

NOTE	CIRC	POLE	AMPS	SERVICE	TYPE	A	B	C	TYPE	SERVICE	AMPS	POLE	CIRC	NOTE
	1	3	60	(E) TRANSFORMER PNL 'B'	FEDR					SPACE	-	1	2	
	3	3	60	^^^	FEDR					SPACE	-	1	4	
	5	3	60	^^^	FEDR					SPACE	-	1	6	
	7	1	20	(E) SHOP LIGHTS	LTG					SPACE	-	1	8	
a	9	1	20	(E) PARKING LOT LIGHTS	LTG		3,360			SPACE	-	1	10	
	11	1	20	(E) SHOP LIGHTS	LTG					SPACE	-	1	12	
	13	1	20	(E) 2 AWNING LIGHTS	LTG					SPACE	-	1	14	
	15	1	-	SPACE						SPACE	-	1	16	
	17	1	-	SPACE						SPACE	-	1	18	
	19	1	-	SPACE						SPACE	-	1	20	
	21	1	-	SPACE						SPACE	-	1	22	
	23	1	-	SPACE						SPACE	-	1	24	
	25	1	-	SPACE						SPACE	-	1	26	
	27	1	-	SPACE						SPACE	-	1	28	
	29	1	-	SPACE						SPACE	-	1	30	
	31	1	-	SPACE						SPACE	-	1	32	
	33	1	-	SPACE						SPACE	-	1	34	
	35	1	-	SPACE						SPACE	-	1	36	
	37	1	-	SPACE						SPACE	-	1	38	
	39	1	-	SPACE						SPACE	-	1	40	a
	41	1	-	SPACE						SPACE	-	1	42	a
				TOTAL V-A		0	3,360	0			3,360 VA			
				TOTAL AMPS		0	12	0			4 A			

A.I.C. RATING:

	LTG	REC	MOTR	LG MTR	MISC	KIT	HEAT	SPEC	TOTAL	AMPS
CONNECTED LOAD IN KVA (THIS PANEL):	3.36	0.00	0.00	0.00	0.00	0.00	0.00	0.00	3.4 KVA	4 A
CONNECTED LOAD IN KVA (BRANCH PANELS):									0.0 KVA	0 A
TOTAL CONNECTED LOAD IN KVA:	3.36	0.00	0.00	0.00	0.00	0.00	0.00	0.00	3.4 KVA	4 A
DEMAND LOAD IN KVA:	4.20	0.00	0.00	0.00	0.00	0.00	0.00	0.00	4.2 KVA	5 A

PANEL NOTES:
a APPROXIMATE LOAD TOTAL WITH NEW (4) PARKING LOT LIGHTS ADDED.
b
c
d

PANEL OPTIONS:



ELECTRICAL GEAR AS INSTALLED

Record Drawings have been reviewed by the Project Engineer, and represent to the best of my knowledge, the project as constructed.

PE _____ Date 12/10/15

STATE OF ALASKA 49th — TIMOTHY E. HILL — 12-9131 — 12/10/15 — REGISTERED PROFESSIONAL ENGINEER

RSA Engineering, Inc.
MECHANICAL AND ELECTRICAL CONSULTING ENGINEERS
670 West Fireweed Lane, Suite 200 Anchorage, AK 99503 Phone (907) 276-0521 Fax (907) 276-7531
191 East Swanson Ave. Wasilla, AK 99654 Phone (907) 357-1521 Fax (907) 357-1751

CLARK BAY FERRY TERMINAL IMPROVEMENTS
HOLLIS, ALASKA

REVISIONS:

DRAWN BY: MJC
CHECKED BY: DKB/TEH
DATE: 12/10/2014
JOB NUMBER: L4189.00
DWG FILE: L4189_ESERIES

DRAWING TITLE:
PANEL SCHEDULES

SHEET:
E4.1